User Manual
SKU: A000067

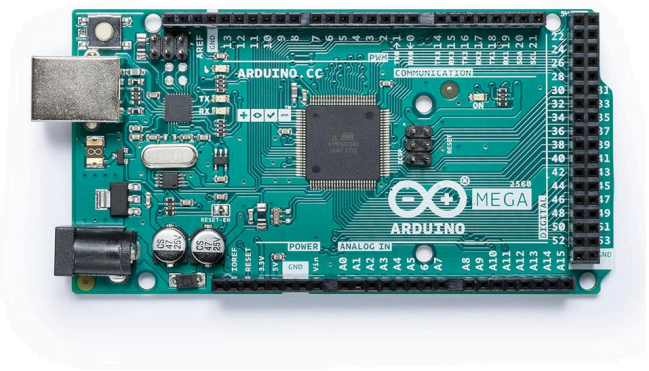

Description

Arduino® Mega 2560 Rev3 is an exemplary development board dedicated for building extensive applications as compared to other maker boards by Arduino. The board accommodates the ATmega2560 microcontroller, which operates at a frequency of 16 MHz. The board contains 54 digital input/output pins, 16 analog inputs, 4 UARTs (hardware serial ports), a USB connection, a power jack, an ICSP header, and a reset button.

Target Areas

3D Printing, Robotics, Maker

Features

- **ATmega2560 Processor**
  - Up to 16 MIPS Throughput at 16MHz
  - 256k bytes (of which 8k is used for the bootloader)
  - 4k bytes EEPROM
  - 8k bytes Internal SRAM
  - 32 × 8 General Purpose Working Registers
  - Real Time Counter with Separate Oscillator
  - Four 8-bit PWM Channels
  - Four Programmable Serial USART
  - Controller/Peripheral SPI Serial Interface
- **ATmega16U2**
  - Up to 16 MIPS Throughput at 16 MHz
  - 16k bytes ISP Flash Memory
  - 512 bytes EEPROM
  - 512 bytes SRAM
  - USART with SPI master only mode and hardware flow control (RTS/CTS)
  - Master/Slave SPI Serial Interface
- **Sleep Modes**
  - Idle
  - ADC Noise Reduction
  - Power-save
  - Power-down
  - Standby
  - Extended Standby
- **Power**
  - USB Connection
  - External AC/DC Adapter
- **I/O**
  - 54 Digital
  - 16 Analog
  - 15 PWM Output

Contents

1 The Board **5**

1.1 Application Examples 5

1.2 Accessories 5

1.3 Related Products 5

2 Ratings **6**

2.1 Recommended Operating Conditions 6

3 Functional Overview **6**

3.1 Block Diagram 6

3.2 Board Topology 7

3.3 Processor 8

3.4 Power Tree 8

4 Board Operation **9**

4.1 Getting Started - IDE 9

4.2 Getting Started - Arduino Cloud Editor 9

4.3 Sample Sketches 9

4.4 Online Resources 9

5 Connector Pinouts **10**

5.1 Analog 11

5.2 Digital 11

5.3 ATMEGA16U2 JP5 13

5.4 ATMEGA16U2 ICSP1 13

5.5 Digital Pins D22 - D53 LHS 13

5.6 Digital Pins D22 - D53 RHS 14

6 Mechanical Information **14**

6.1 Board Outline 14

6.2 Board Mount Holes 15

7 Declaration of Conformity CE DoC (EU) **15**

8 Declaration of Conformity to EU RoHS & REACH 211 01/19/2021

9 Conflict Minerals Declaration **17**

10 FCC Caution **17**

11 Company Information **18**

12 Reference Documentation **18**

13 Revision History **18**

14 电路板简介

14.1 应用示例

14.2 配件

14.3 相关产品

15 额定值

15.1 建议运行条件

16 功能概述

16.1 方框图

16.2 电路板拓扑结构

16.3 处理器

16.4 电源树

17 电路板操作

17.1 入门指南 - IDE

17.2 入门指南 - Arduino Cloud Editor

17.3 示例程序

17.4 在线资源

18 连接器引脚布局

18.1 模拟

18.2 数字

18.3 ATMEGA16U2 JP5 28

18.4 ATMEGA16U2 ICSP1 28

18.5 数字引脚 D22 - D53 LHS

18.6 数字引脚 D22 - D53 LHS

19 机械层信息

19.1 电路板外形图

19.2 电路板安装孔

20 符合性声明 CE DoC（欧盟）

21 声明符合欧盟 RoHS 和 REACH 211 01/19/2021

22 冲突矿产声明

23 FCC 警告

24 公司信息

25 参考资料

26 修订记录

1 The Board

Mega 2560 Rev3 is a successor board of Arduino Mega, it is dedicated to applications and projects that require large number of input output pins and the use cases which need high processing power. The Mega 2560 Rev3 comes with a much larger set of IOs when we compare it with the traditional Arduino® UNO board considering the form factor of both the boards.

1.1 Application Examples

- **Robotics**: Featuring the high processing capacity, the Mega 2560 Rev3 can handle the extensive robotic applications. It is compatible with the motor controller shield that enables it to control multiple motors at an instance, thus making it perfect of robotic applications. The large number of I/O pins can accommodate many robotic sensors as well.
- **3D Printing**: Algorithms play a significant role in implementation of 3D printers. Mega 2560 Rev3 has the power to process these complex algorithms required for 3D printing. Additionally, the slight changes to the code is easily possible with the Arduino IDE and thus 3D printing programs can be customized according to user requirements.
- **Wi-Fi**: Integrating wireless functionality enhances the utility of the applications. Mega 2560 Rev3 is compatible with Wi-Fi® shields hence allowing the wireless features for the applications in 3D printing and Robotics.

1.2 Accessories

1.3 Related Products

- Arduino® UNO R3
- Arduino® Nano
- Arduino® Due without headers

2 Ratings

2.1 Recommended Operating Conditions

Symbol	Description	Min	Typ	Max	Unit
V_{IN}	Input voltage from VIN pad / DC Jack	7	7.0	12	V
V_{USB}	Input voltage from USB connector	4.8	5.0	5.5	V
T_{OP}	Operating Temperature	-40	25	85	°C

3 Functional Overview

3.1 Block Diagram

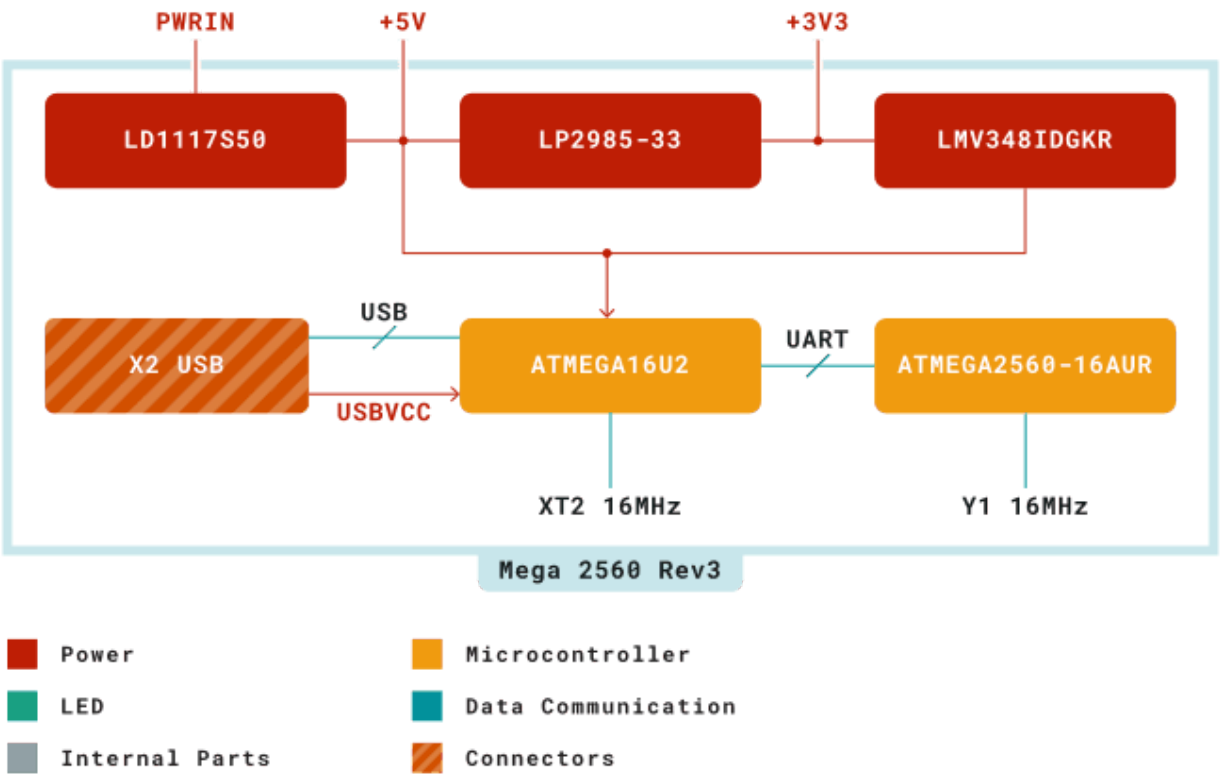

Arduino Mega 2560 Rev3 Block Diagram

3.2 Board Topology

Front View

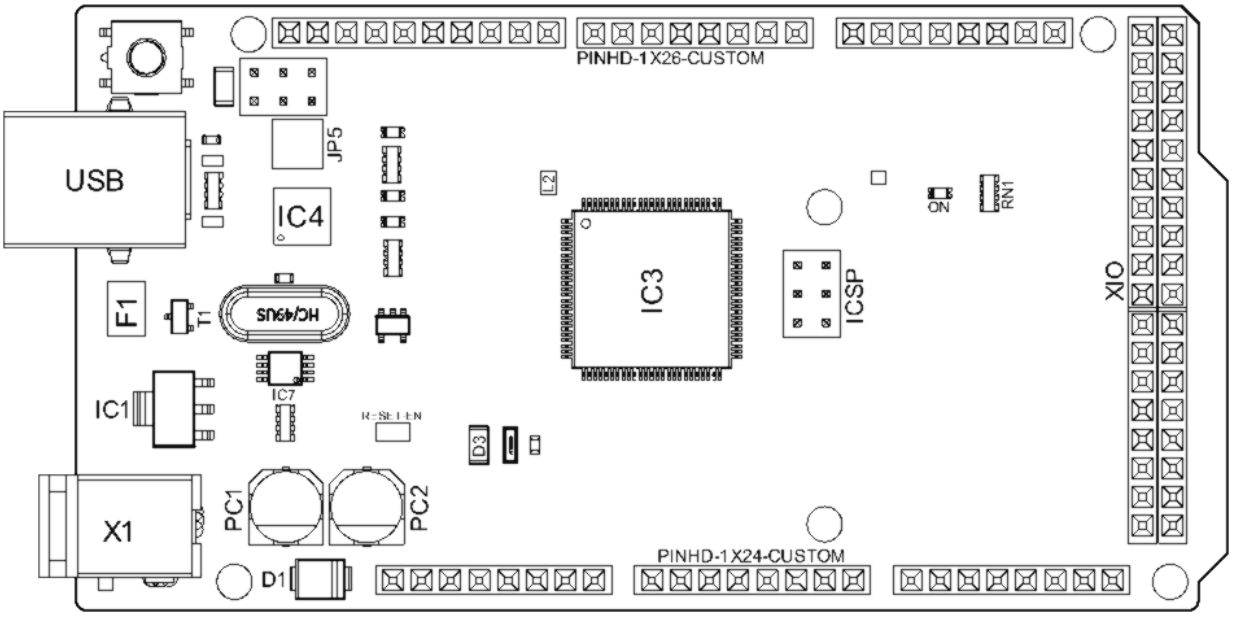

Arduino Mega 2560 Rev3 Top View

Ref.	Description	Ref.	Description
USB	USB B Connector	F1	Chip Capacitor
IC1	5V Linear Regulator	X1	Power Jack Connector
JP5	Plated Holes	IC4	ATmega16U2 chip
PC1	Electrolytic Alumninum Capacitor	PC2	Electrolytic Alumninum Capacitor
D1	General Purpose Rectifier	D3	General Purpose Diode
L2	Fixed Inductor	IC3	ATmega2560 chip
ICSP	Connector Header	ON	Green LED
RN1	Resistor Array	XIO	Connector

3.3 Processor

Primary processor of Mega 2560 Rev3 board is ATmega2560 chip which operates at a frequency of 16 MHz. It accommodates a large number of input and output lines which gives the provision of interfacing many external devices. At the same time the operations and processing is not slowed due to its significantly larger RAM than the other processors. The board also features a USB serial processor ATmega16U2 which acts an interface between the USB input signals and the main processor. This increases the flexibility of interfacing and connecting peripherals to the Mega 2560 Rev3 board.

3.4 Power Tree

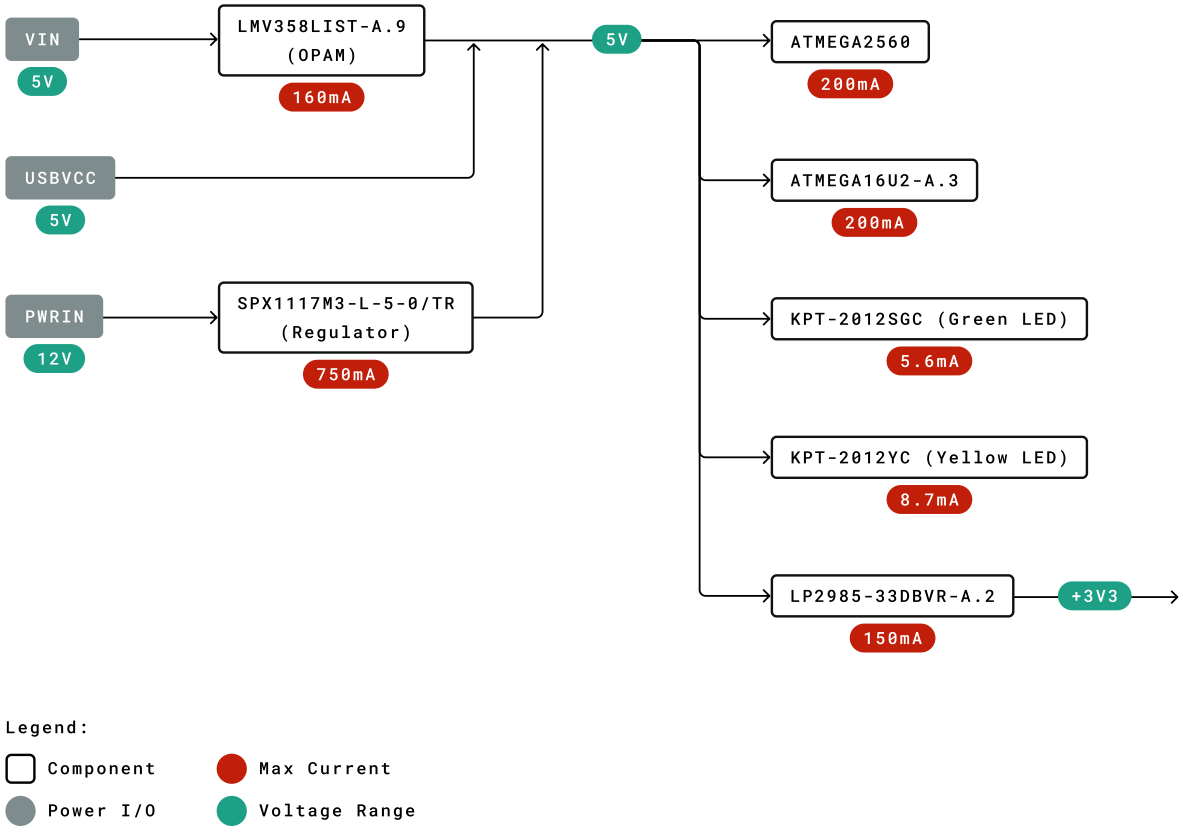

Power Tree

4 Board Operation

4.1 Getting Started - IDE

If you want to program your Mega 2560 Rev3 while offline you need to install the Arduino Desktop IDE **[1]** To connect the Mega 2560 Rev3 to your computer, you'll need a Type-B USB cable. This also provides power to the board, as indicated by the LED.

4.2 Getting Started - Arduino Cloud Editor

All Arduino boards, including this one, work out-of-the-box on the Arduino Cloud Editor **[2]**, by just installing a simple plugin.

The Arduino Cloud Editor is hosted online, therefore it will always be up-to-date with the latest features and support for all boards. Follow **[3]** to start coding on the browser and upload your sketches onto your board.

4.3 Sample Sketches

Sample sketches for the Mega 2560 Rev3 can be found either in the "Examples" menu in the Arduino IDE or under the "Documentation" menu on the Arduino website [4].

4.4 Online Resources

Now that you have gone through the basics of what you can do with the board you can explore the endless possibilities it provides by checking exciting projects on Arduino Project Hub **[5]**, the Arduino Library Reference **[6]** and the online store **[7]** where you will be able to complement your board with sensors, actuators and more.

5 Connector Pinouts

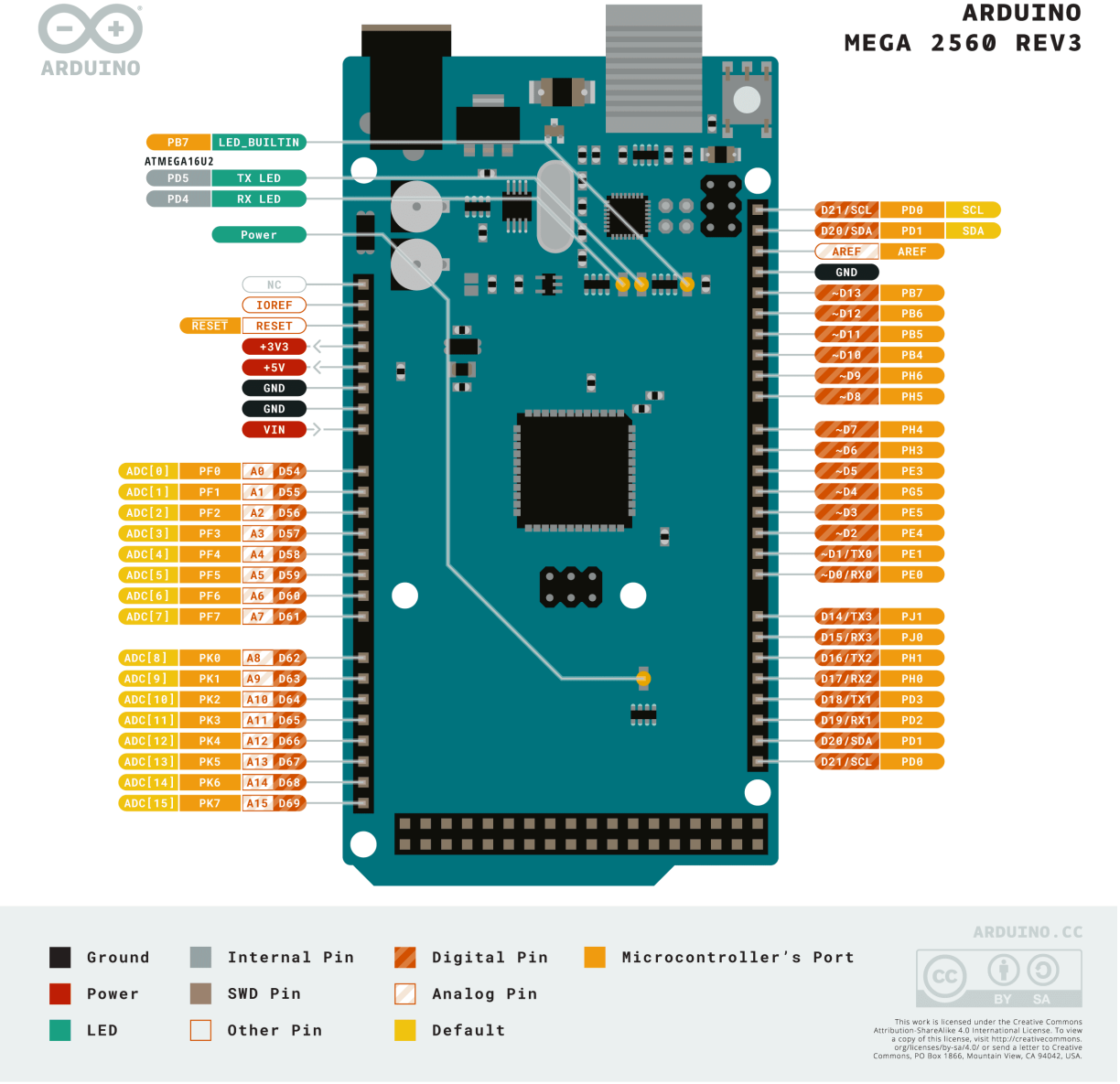

Arduino Mega 2560 Rev3 Pinout

5.1 Analog

Pin	Function	Type	Description
1	NC	NC	Not Connected
2	IOREF	IOREF	Reference for digital logic V - connected to 5V
3	Reset	Reset	Reset
4	+3V3	Power	+3V3 Power Rail
5	+5V	Power	+5V Power Rail
6	GND	Power	Ground
7	GND	Power	Ground
8	VIN	Power	Voltage Input
9	A0	Analog	Analog input 0 /GPIO
10	A1	Analog	Analog input 1 /GPIO
11	A2	Analog	Analog input 2 /GPIO
12	A3	Analog	Analog input 3 /GPIO
13	A4	Analog	Analog input 4 /GPIO
14	A5	Analog	Analog input 5 /GPIO
15	A6	Analog	Analog input 6 /GPIO
16	A7	Analog	Analog input 7 /GPIO
17	A8	Analog	Analog input 8 /GPIO
18	A9	Analog	Analog input 9 /GPIO
19	A10	Analog	Analog input 10 /GPIO
20	A11	Analog	Analog input 11 /GPIO
21	A12	Analog	Analog input 12 /GPIO
22	A13	Analog	Analog input 13 /GPIO
23	A14	Analog	Analog input 14 /GPIO
24	A15	Analog	Analog input 15 /GPIO

5.2 Digital

Pin	Function	Type	Description
1	D21/SCL	Digital Input/I2C	Digital input 21/I2C Dataline
2	D20/SDA	Digital Input/I2C	Digital input 20/I2C Dataline
3	AREF	Digital	Analog Reference Voltage
4	GND	Power	Ground
5	D13	Digital/GPIO	Digital input 13/GPIO
6	D12	Digital/GPIO	Digital input 12/GPIO
7	D11	Digital/GPIO	Digital input 11/GPIO
8	D10	Digital/GPIO	Digital input 10/GPIO
9	D9	Digital/GPIO	Digital input 9/GPIO
10	D8	Digital/GPIO	Digital input 8/GPIO
11	D7	Digital/GPIO	Digital input 7/GPIO
12	D6	Digital/GPIO	Digital input 6/GPIO
13	D5	Digital/GPIO	Digital input 5/GPIO
14	D4	Digital/GPIO	Digital input 4/GPIO

Pin	Function	Type	Description
15	D3	Digital/GPIO	Digital input 3/GPIO
16	D2	Digital/GPIO	Digital input 2/GPIO
17	D1/TX0	Digital/GPIO	Digital input 1 /GPIO
18	D0/Tx1	Digital/GPIO	Digital input 0 /GPIO
19	D14	Digital/GPIO	Digital input 14 /GPIO
20	D15	Digital/GPIO	Digital input 15 /GPIO
21	D16	Digital/GPIO	Digital input 16 /GPIO
22	D17	Digital/GPIO	Digital input 17 /GPIO
23	D18	Digital/GPIO	Digital input 18 /GPIO
24	D19	Digital/GPIO	Digital input 19 /GPIO
25	D20	Digital/GPIO	Digital input 20 /GPIO
26	D21	Digital/GPIO	Digital input 21 /GPIO

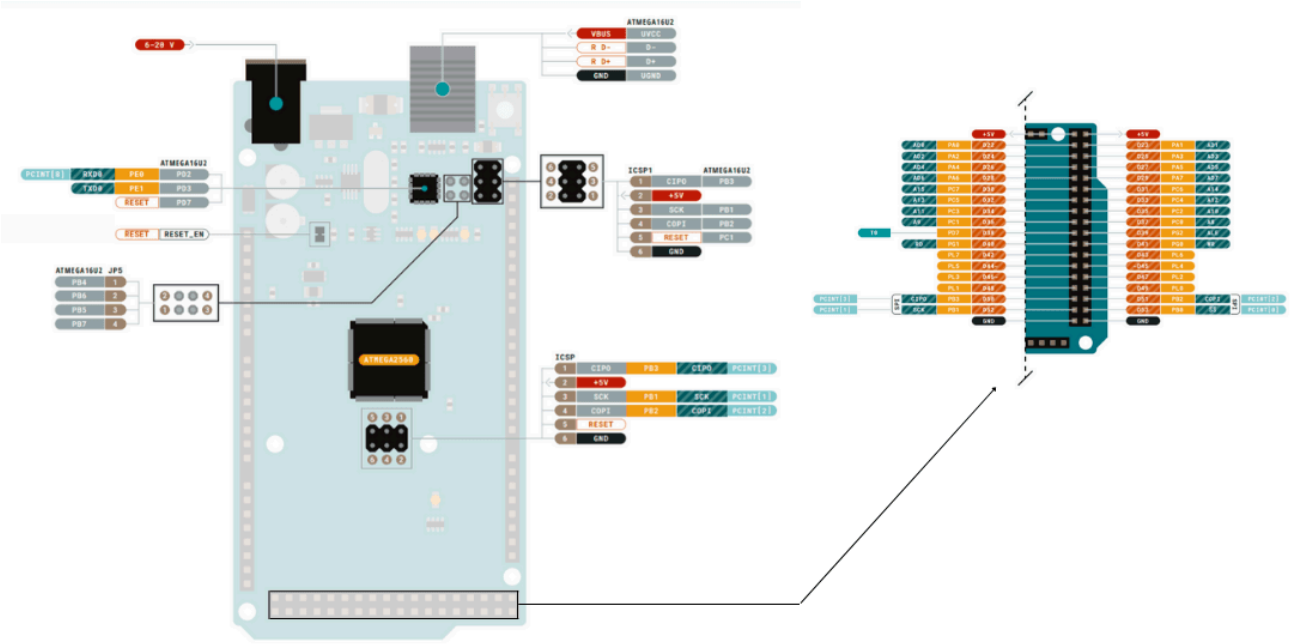

Arduino Mega 2560 Rev3 Pinout

5.3 ATMEGA16U2 JP5

Pin	Function	Type	Description
1	PB4	Internal	Serial Wire Debug
2	PB6	Internal	Serial Wire Debug
3	PB5	Internal	Serial Wire Debug
4	PB7	Internal	Serial Wire Debug

5.4 ATMEGA16U2 ICSP1

Pin	Function	Type	Description
1	CIPO	Internal	Controller In Peripheral Out
2	+5V	Internal	Power Supply of 5V
3	SCK	Internal	Serial Clock
4	COPI	Internal	Controller Out Peripheral In
5	RESET	Internal	Reset
6	GND	Internal	Ground

5.5 Digital Pins D22 - D53 LHS

Pin	Function	Type	Description
1	+5V	Power	Power Supply of 5V
2	D22	Digital	Digital input 22/GPIO
3	D24	Digital	Digital input 24/GPIO
4	D26	Digital	Digital input 26/GPIO
5	D28	Digital	Digital input 28/GPIO
6	D30	Digital	Digital input 30/GPIO
7	D32	Digital	Digital input 32/GPIO
8	D34	Digital	Digital input 34/GPIO
9	D36	Digital	Digital input 36/GPIO
10	D38	Digital	Digital input 38/GPIO
11	D40	Digital	Digital input 40/GPIO
12	D42	Digital	Digital input 42/GPIO
13	D44	Digital	Digital input 44/GPIO
14	D46	Digital	Digital input 46/GPIO
15	D48	Digital	Digital input 48/GPIO
16	D50	Digital	Digital input 50/GPIO
17	D52	Digital	Digital input 52/GPIO
18	GND	Power	Ground

5.6 Digital Pins D22 - D53 RHS

Pin	Function	Type	Description
1	+5V	Power	Power Supply of 5V
2	D23	Digital	Digital input 23/GPIO
3	D25	Digital	Digital input 25/GPIO
4	D27	Digital	Digital input 27/GPIO
5	D29	Digital	Digital input 29/GPIO
6	D31	Digital	Digital input 31/GPIO
7	D33	Digital	Digital input 33/GPIO
8	D35	Digital	Digital input 35/GPIO
9	D37	Digital	Digital input 37/GPIO
10	D39	Digital	Digital input 39/GPIO
11	D41	Digital	Digital input 41/GPIO
12	D43	Digital	Digital input 43/GPIO
13	D45	Digital	Digital input 45/GPIO
14	D47	Digital	Digital input 47/GPIO
15	D49	Digital	Digital input 49/GPIO
16	D51	Digital	Digital input 51/GPIO
17	D53	Digital	Digital input 53/GPIO
18	GND	Power	Ground

6 Mechanical Information

6.1 Board Outline

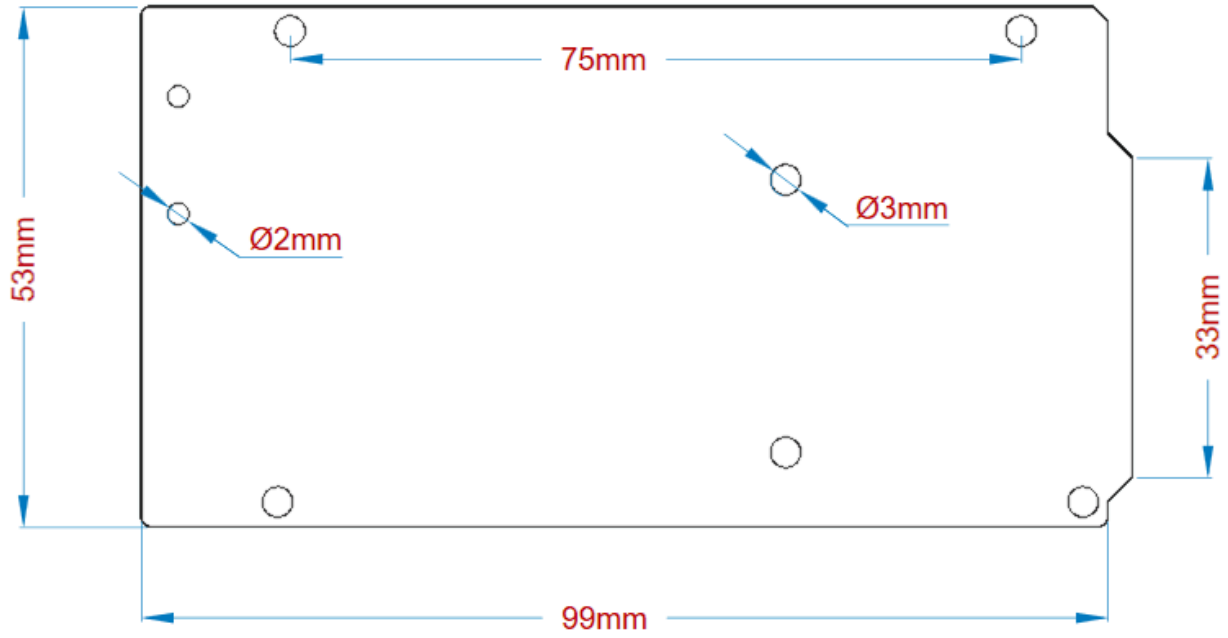

Arduino Mega 2560 Rev3 Outline

6.2 Board Mount Holes

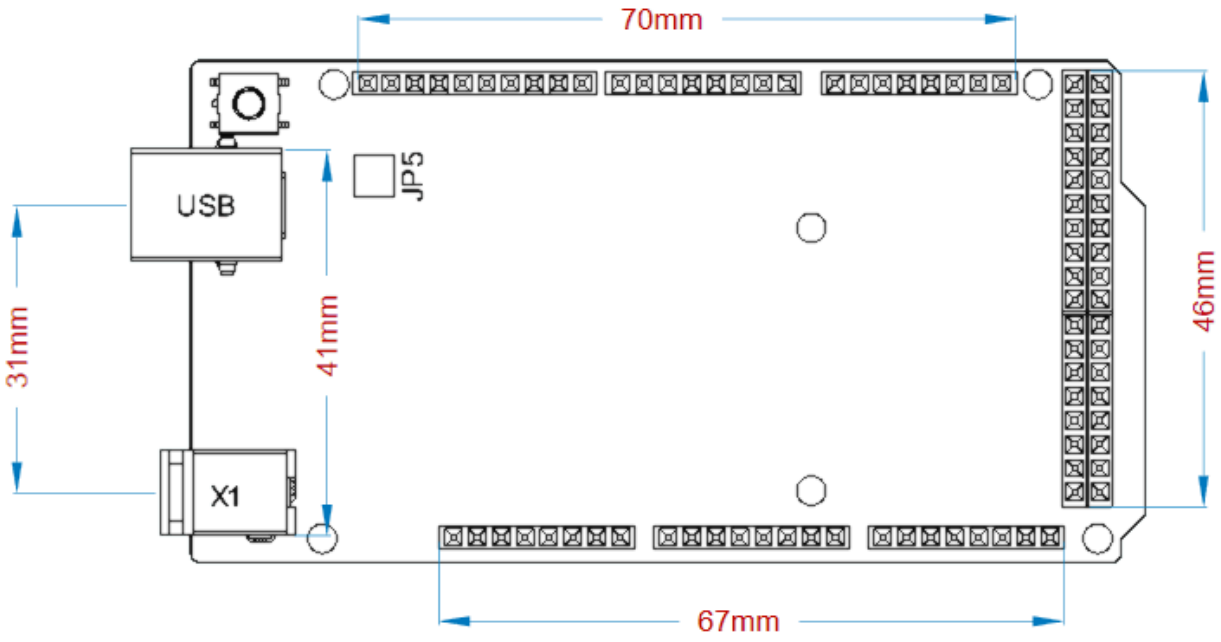

Arduino Mega 2560 Rev3 Mount Holes

Certifications

7 Declaration of Conformity CE DoC (EU)

We declare under our sole responsibility that the products above are in conformity with the essential requirements of the following EU Directives and therefore qualify for free movement within markets comprising the European Union (EU) and European Economic Area (EEA).

8 Declaration of Conformity to EU RoHS & REACH 211 01/19/2021

Arduino boards are in compliance with RoHS 2 Directive 2011/65/EU of the European Parliament and RoHS 3 Directive 2015/863/EU of the Council of 4 June 2015 on the restriction of the use of certain hazardous substances in electrical and electronic equipment.

Substance	Maximum Limit (ppm)
Lead (Pb)	1000
Cadmium (Cd)	100
Mercury (Hg)	1000
Hexavalent Chromium (Cr6+)	1000
Poly Brominated Biphenyls (PBB)	1000
Poly Brominated Diphenyl ethers (PBDE)	1000
Bis(2-Ethylhexyl} phthalate (DEHP)	1000
Benzyl butyl phthalate (BBP)	1000
Dibutyl phthalate (DBP)	1000
Diisobutyl phthalate (DIBP)	1000

Exemptions : No exemptions are claimed.

Arduino Boards are fully compliant with the related requirements of European Union Regulation (EC) 1907 /2006 concerning the Registration, Evaluation, Authorization and Restriction of Chemicals (REACH). We declare none of the SVHCs (https://echa.europa.eu/web/guest/candidate-list-table), the Candidate List of Substances of Very High Concern for authorization currently released by ECHA, is present in all products (and also package) in quantities totaling in a concentration equal or above 0.1%. To the best of our knowledge, we also declare that our products do not contain any of the substances listed on the "Authorization List" (Annex XIV of the REACH regulations) and Substances of Very High Concern (SVHC) in any significant amounts as specified by the Annex XVII of Candidate list published by ECHA (European Chemical Agency) 1907 /2006/EC.

9 Conflict Minerals Declaration

As a global supplier of electronic and electrical components, Arduino is aware of our obligations with regards to laws and regulations regarding Conflict Minerals, specifically the Dodd-Frank Wall Street Reform and Consumer Protection Act, Section 1502. Arduino does not directly source or process conflict minerals such as Tin, Tantalum, Tungsten, or Gold. Conflict minerals are contained in our products in the form of solder, or as a component in metal alloys. As part of our reasonable due diligence Arduino has contacted component suppliers within our supply chain to verify their continued compliance with the regulations. Based on the information received thus far we declare that our products contain Conflict Minerals sourced from conflict-free areas.

10 FCC Caution

Any Changes or modifications not expressly approved by the party responsible for compliance could void the user's authority to operate the equipment.

This device complies with part 15 of the FCC Rules. Operation is subject to the following two conditions:

(1) This device may not cause harmful interference

(2) this device must accept any interference received, including interference that may cause undesired operation.

FCC RF Radiation Exposure Statement:

1. This Transmitter must not be co-located or operating in conjunction with any other antenna or transmitter.
2. This equipment complies with RF radiation exposure limits set forth for an uncontrolled environment.
3. This equipment should be installed and operated with minimum distance 20cm between the radiator & your body.

English: User manuals for licence-exempt radio apparatus shall contain the following or equivalent notice in a conspicuous location in the user manual or alternatively on the device or both. This device complies with Industry Canada licence-exempt RSS standard(s). Operation is subject to the following two conditions:

(1) this device may not cause interference

(2) this device must accept any interference, including interference that may cause undesired operation of the device.

French: Le présent appareil est conforme aux CNR d'Industrie Canada applicables aux appareils radio exempts de licence. L'exploitation est autorisée aux deux conditions suivantes :

(1) l' appareil nedoit pas produire de brouillage

(2) l'utilisateur de l'appareil doit accepter tout brouillage radioélectrique subi, même si le brouillage est susceptible d'en compromettre le fonctionnement.

IC SAR Warning:

English This equipment should be installed and operated with minimum distance 20 cm between the radiator and your body.

French: Lors de l' installation et de l' exploitation de ce dispositif, la distance entre le radiateur et le corps est d 'au moins 20 cm.

Important: The operating temperature of the EUT can't exceed 85°C and shouldn't be lower than -40°C.

Hereby, Arduino S.r.l. declares that this product is in compliance with essential requirements and other relevant provisions of Directive 201453/EU. This product is allowed to be used in all EU member states.

11 Company Information

Company name	**Arduino S.r.l.**
Company Address	Arduino SRL, Via Andrea Appiani 25, 20900 Monza MB, Italy

12 Reference Documentation

Ref	**Link**
Arduino IDE (Desktop)	https://www.arduino.cc/en/Main/Software
Arduino Cloud Editor	https://create.arduino.cc/editor
Arduino Cloud Editor - Getting Started	https://docs.arduino.cc/arduino-cloud/guides/editor/
Arduino Website	https://www.arduino.cc/
Arduino Project Hub	https://create.arduino.cc/projecthub?by=part&part_id=11332&sort=trending
Library Reference	https://www.arduino.cc/reference/en/libraries/
Online Store	https://store.arduino.cc/

13 Revision History

Date	**Revision**	**Changes**
25/04/2024	3	Updated link to new Cloud Editor
09/10/2023	2	Updated recommended operating conditions
29/09/2020	1	First Release

中文（ZH）

描述

与 Arduino 的其他开发板相比，Arduino® Mega 2560 Rev3 是一款用于构建广泛应用的示范性开发板。该电路板内置 ATmega2560 微控制器，工作频率为 16 MHz。电路板包含 54 个数字输入/输出引脚、16 个模拟输入、4 个 UART（硬件串行端口）、一个 USB 连接、一个电源插孔、一个 ICSP 接头和一个复位按钮。

目标领域：

3D 打印、机器人、创客

特点

- **ATmega2560 处理器**
  - 在 16MHz 的工作频率下吞吐量高达 16 MIPS
  - 256k 字节（其中 8k 字节用于引导加载程序）
  - 4k 字节 EEPROM
  - 8k 字节内部 SRAM
  - 32 × 8 通用工作寄存器
  - 带有独立振荡器的实时计数器
  - 四个 8 位 PWM 通道
  - 4 个可编程串行 USART
  - 控制器/外设 SPI 串行接口
- **ATmega16U2**
  - 在 16MHz 的工作频率下吞吐量高达 16 MIPS
  - 16k 字节 ISP 闪存
  - 512 字节 EEPROM
  - 512 字节 SRAM
  - 仅支持 SPI 主设备模式和硬件流控制 (RTS/CTS) 的 USART
  - 主/从 SPI 串行接口
- **休眠模式**
  - 空闲模式
  - ADC 降噪模式
  - 节能模式
  - 掉电模式
  - 待机模式
  - 扩展待机模式
- **电源**
  - USB 连接

  - 外部交流/直流适配器
- **输入/输出**
  - 54 个数字输入/输出引脚
  - 16 个模拟输入
  - 15 个 PWM 输出

目录

14 电路板简介

Mega 2560 Rev3 是 Arduino Mega 的一款升级版电路板，专门用于需要大量输入输出引脚和需要高处理能力的应用和项目。与传统的 Arduino® UNO 电路板相比，尽管两款电路板外形尺寸相似，但 Mega 2560 Rev3 的输入输出引脚数量要多得多。

14.1 应用示例

- **机器人**： Mega 2560 Rev3 具有高处理能力，可以处理大量机器人应用。它与电机控制器扩展板兼容，能够同时控制多个电机，因此非常适合机器人应用。其大量的 I/O 引脚也能容纳许多机器人传感器。
- **3D 打印**： 算法在 3D 打印机的实施过程中发挥着重要作用。Mega 2560 Rev3 能够处理 3D 打印所需的复杂算法。此外，使用 Arduino IDE 可以轻松地对代码进行细微修改，因此可以根据用户要求定制 3D 打印程序。
- **Wi-Fi**： 该电路板集成无线功能，增强了应用的实用性。Mega 2560 Rev3 与 Wi-Fi® 扩展板兼容，因此可以为 3D 打印和机器人应用提供无线功能。

14.2 配件

14.3 相关产品

- Arduino® UNO R3
- Arduino® Nano
- Arduino® Due（不带接头）

15 额定值

15.1 建议运行条件

符号	描述	最小值	典型值	最大值	单位
V_{IN}	来自 VIN 焊盘/DC 插孔的输入电压	7	7.0	12	V
V_{USB}	来自 USB 连接器的输入电压	4.8	5.0	5.5	V
T_{OP}	工作温度	-40	25	85	°C

16 功能概述

16.1 方框图

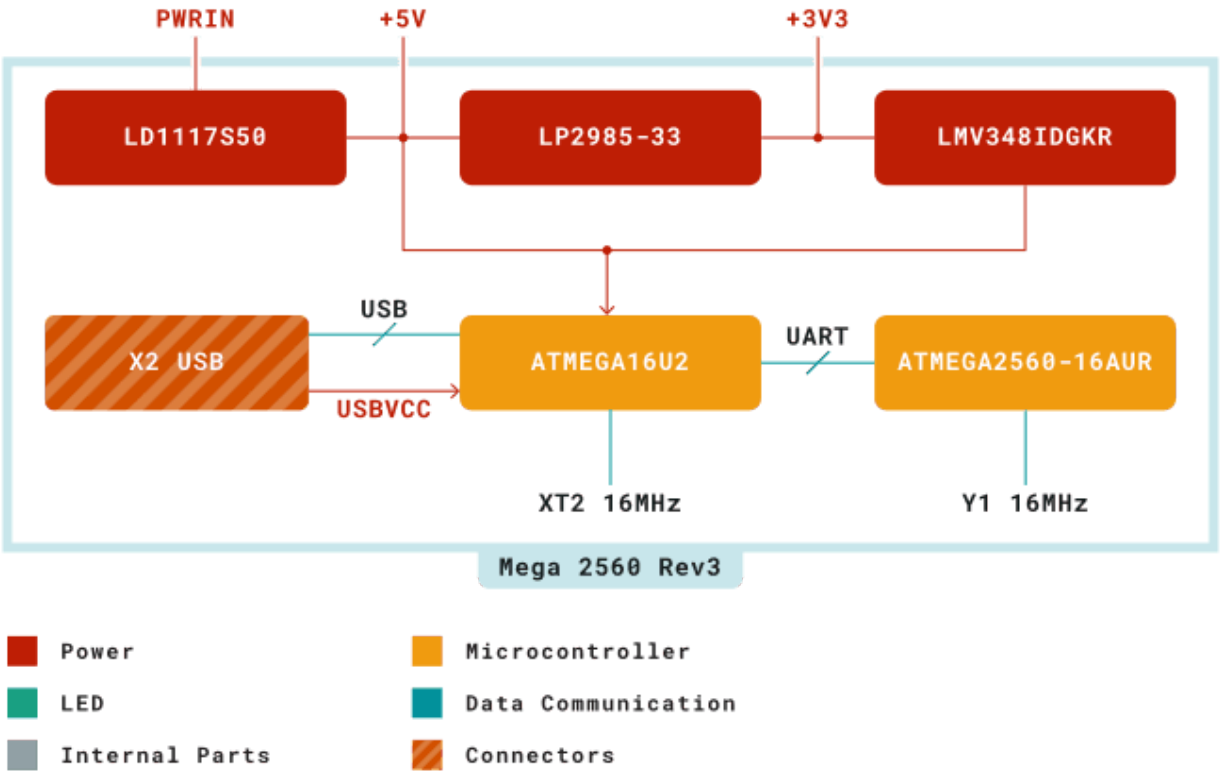

Arduino Mega 2560 Rev3 方框图

16.2 电路板拓扑结构

前视图

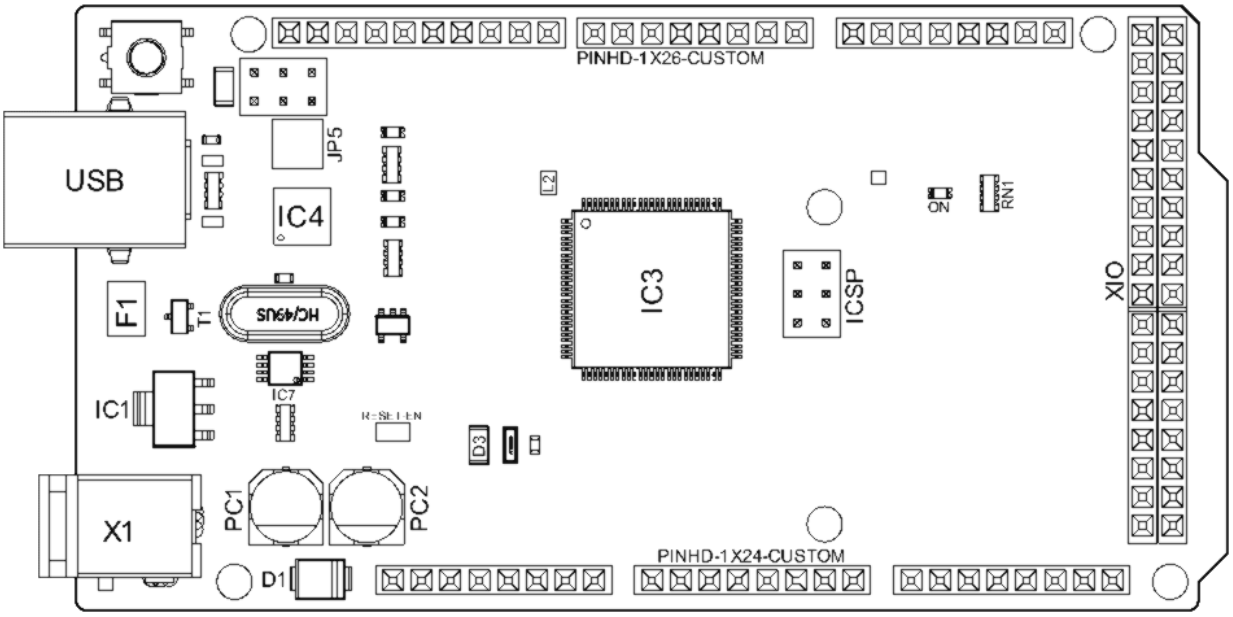

Arduino Mega 2560 Rev3 俯视图

编号	描述	编号	描述
USB	USB B 连接器	F1	片式电容器
IC1	5V 线性稳压器	X1	电源插孔连接器
JP5	电镀通孔	IC4	ATmega16U2 芯片
PC1	电解铝电容	PC2	电解铝电容
D1	通用整流器	D3	通用二极管
L2	固定电感器	IC3	ATmega2560 芯片
ICSP	连接器接头	ON	绿色 LED
RN1	电阻器阵列	XIO	连接器

16.3 处理器

Mega 2560 Rev3 电路板的主处理器是 ATmega2560 芯片，工作频率为 16 MHz。它提供了大量的输入和输出线路，可以连接许多外部设备。同时，由于它的 RAM 比其他处理器大得多，因此操作和处理速度不会减慢。该电路板上还配备一个 USB 串行处理器 ATmega16U2，它是 USB 输入信号与主处理器之间的接口。这增加了将外设连接到 Mega 2560 Rev3 电路板的灵活性。

16.4 电源树

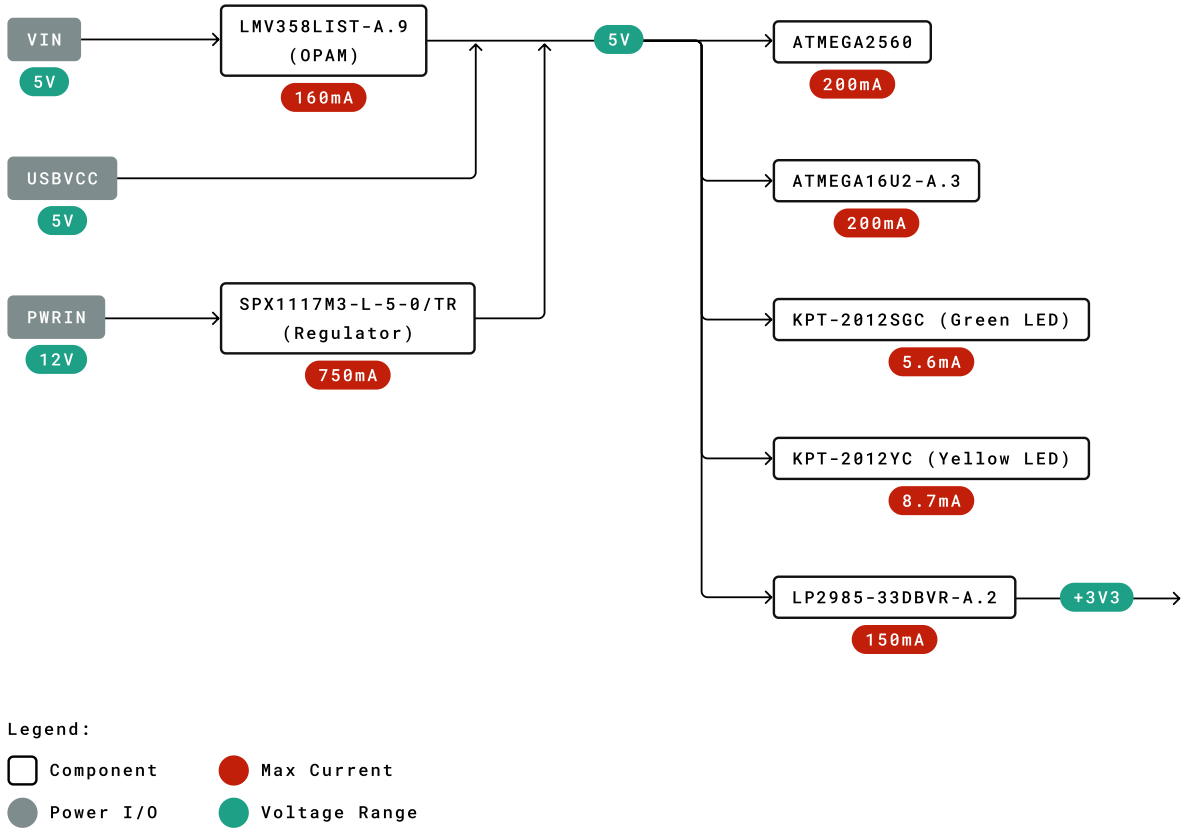

Power Tree

17 电路板操作

17.1 入门指南 - IDE

如需在离线状态下对 Mega 2560 Rev3 进行编程，则需要安装 Arduino Desktop IDE **[1]** 若要将 Mega 2560 Rev3 连接到计算机，则需要使用 Type-B USB 电缆。如 LED 指示灯所示，该电缆还可以为电路板提供电源。

17.2 入门指南 - Arduino Cloud Editor

包括本电路板在内的所有 Arduino 电路板，都可以在 Arduino Cloud Editor **[2]**上开箱即用，只需安装一个简单的插件即可。

Arduino Cloud Editor 是在线托管的，因此它将始终提供最新功能并支持所有电路板。接下来**[3]**开始在浏览器上编码并将程序上传到您的电路板上。

17.3 示例程序

Mega 2560 Rev3 的示例程序可以在 Arduino IDE 的“示例”菜单或 Arduino 网站 **[4]** 的“文档”部分找到。

17.4 在线资源

现在，您已经了解该电路板的基本功能，就可以通过查看 Arduino Project Hub **[5]**、Arduino Library Reference **[6]** 和在线商店 **[7]** 上的精彩项目来探索它所提供的无限可能性；在这些项目中，您可以为电路板配备传感器、执行器等。

18 连接器引脚布局

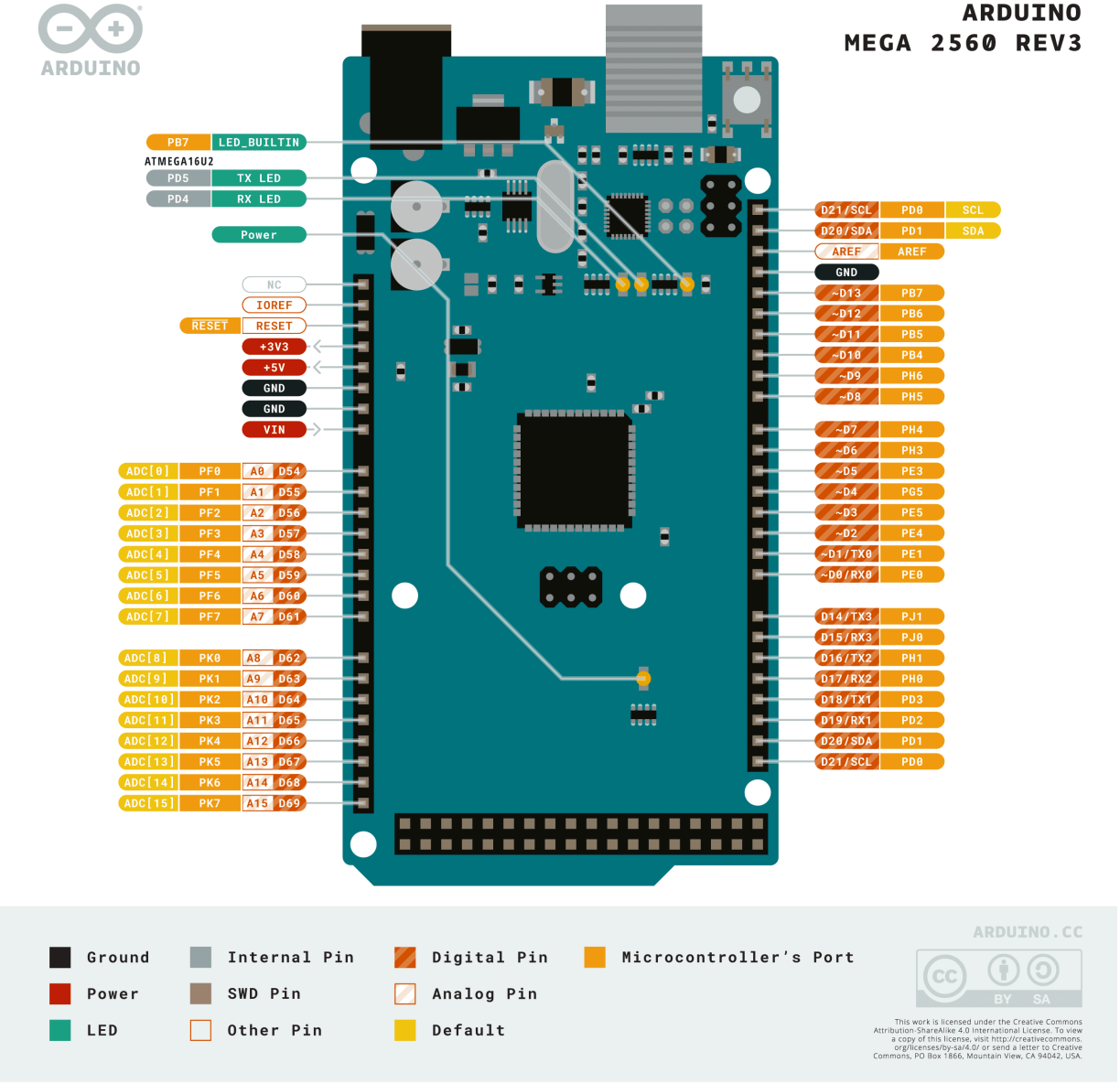

Arduino Mega 2560 Rev3 引脚布局

18.1 模拟

引脚	功能	类型	描述
1	NC	NC	未连接
2	IOREF	IOREF	数字逻辑参考电压 V - 连接至 5V
3	Reset	复位	复位
4	+3V3	电源	+3V3 电源轨
5	+5V	电源	+5V 电源轨
6	GND	电源	接地
7	GND	电源	接地
8	VIN	电源	电压输入
9	A0	模拟	模拟输入0 / GPIO
10	A1	模拟	模拟输入1 / GPIO
11	A2	模拟	模拟输入2 / GPIO
12	A3	模拟	模拟输入3 / GPIO
13	A4	模拟	模拟输入4 / GPIO
14	A5	模拟	模拟输入5 / GPIO
15	A6	模拟	模拟输入6 / GPIO
16	A7	模拟	模拟输入7 / GPIO
17	A8	模拟	模拟输入8 / GPIO
18	A9	模拟	模拟输入9 / GPIO
19	A10	模拟	模拟输入10 / GPIO
20	A11	模拟	模拟输入11 / GPIO
21	A12	模拟	模拟输入12 / GPIO
22	A13	模拟	模拟输入13 / GPIO
23	A14	模拟	模拟输入14 / GPIO
24	A15	模拟	模拟输入15 / GPIO

18.2 数字

引脚	功能	类型	描述
1	D21/SCL	数字输入/I2C	数字输入 21/I2C 数据线
2	D20/SDA	数字输入/I2C	数字输入 20/I2C 数据线
3	AREF	数字	模拟参考电压
4	GND	电源	接地
5	D13	数字/GPIO	数字输入 13/GPIO
6	D12	数字/GPIO	数字输入 12/GPIO
7	D11	数字/GPIO	数字输入 11/GPIO
8	D10	数字/GPIO	数字输入 10/GPIO
9	D9	数字/GPIO	数字输入 9/GPIO
10	D8	数字/GPIO	数字输入 8/GPIO
11	D7	数字/GPIO	数字输入 7/GPIO
12	D6	数字/GPIO	数字输入 6/GPIO
13	D5	数字/GPIO	数字输入 5/GPIO
14	D4	数字/GPIO	数字输入 4/GPIO
15	D3	数字/GPIO	数字输入 3/GPIO
16	D2	数字/GPIO	数字输入 2/GPIO
17	D1/TX0	数字/GPIO	数字输入 1/GPIO
18	D0/Tx1	数字/GPIO	数字输入 0/GPIO
19	D14	数字/GPIO	数字输入 14 /GPIO
20	D15	数字/GPIO	数字输入 15 /GPIO
21	D16	数字/GPIO	数字输入 16 /GPIO
22	D17	数字/GPIO	数字输入 17 /GPIO
23	D18	数字/GPIO	数字输入 18 /GPIO
24	D19	数字/GPIO	数字输入 19/GPIO
25	D20	数字/GPIO	数字输入 20/GPIO
26	D21	数字/GPIO	数字输入 21/GPIO

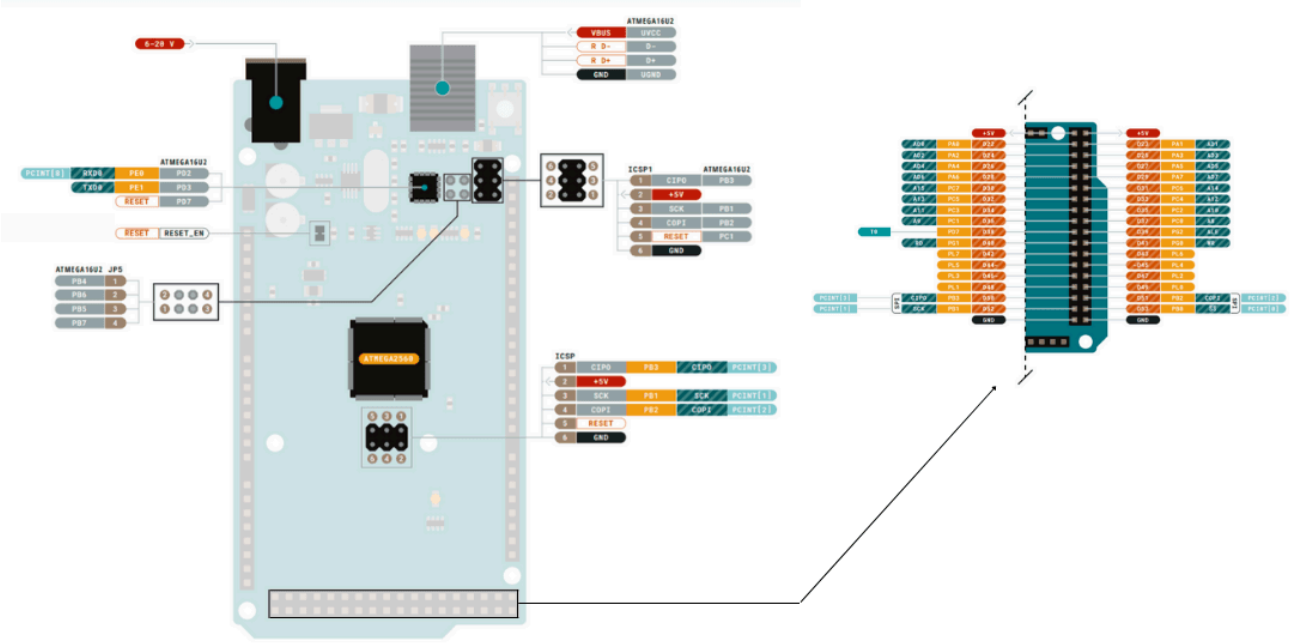

Arduino Mega 2560 Rev3 引脚布局

18.3 ATMEGA16U2 JP5

引脚	功能	类型	描述
1	PB4	内部	串行线调试
2	PB6	内部	串行线调试
3	PB5	内部	串行线调试
4	PB7	内部	串行线调试

18.4 ATMEGA16U2 ICSP1

引脚	功能	类型	描述
1	CIPO	内部	控制器输入外设输出
2	+5V	内部	5 V的电源
3	SCK	内部	串行时钟
4	COPI	内部	控制器输出外设输入
5	RESET	内部	复位
6	GND	内部	接地

18.5 数字引脚 D22 - D53 LHS

引脚	功能	类型	描述
1	+5V	电源	5 V的电源
2	D22	数字	数字输入 22/GPIO
3	D24	数字	数字输入 24/GPIO
4	D26	数字	数字输入 26/GPIO
5	D28	数字	数字输入 28/GPIO
6	D30	数字	数字输入 30/GPIO
7	D32	数字	数字输入 32/GPIO
8	D34	数字	数字输入 34/GPIO
9	D36	数字	数字输入 36/GPIO
10	D38	数字	数字输入 38/GPIO
11	D40	数字	数字输入 40/GPIO
12	D42	数字	数字输入 42/GPIO
13	D44	数字	数字输入 44/GPIO
14	D46	数字	数字输入 46/GPIO
15	D48	数字	数字输入 48/GPIO
16	D50	数字	数字输入 50/GPIO
17	D52	数字	数字输入 52/GPIO
18	GND	电源	接地

18.6 数字引脚 D22 - D53 LHS

引脚	功能	类型	描述
1	+5V	电源	5 V的电源
2	D23	数字	数字输入 23/GPIO
3	D25	数字	数字输入 25/GPIO
4	D27	数字	数字输入 27/GPIO
5	D29	数字	数字输入 29/GPIO
6	D31	数字	数字输入 31/GPIO
7	D33	数字	数字输入 33/GPIO
8	D35	数字	数字输入 35/GPIO
9	D37	数字	数字输入 37/GPIO
10	D39	数字	数字输入 39/GPIO
11	D41	数字	数字输入 41/GPIO
12	D43	数字	数字输入 43/GPIO
13	D45	数字	数字输入 45/GPIO
14	D47	数字	数字输入 47/GPIO
15	D49	数字	数字输入 49/GPIO
16	D51	数字	数字输入 51/GPIO
17	D53	数字	数字输入 53/GPIO
18	GND	电源	接地

19 机械层信息

19.1 电路板外形图

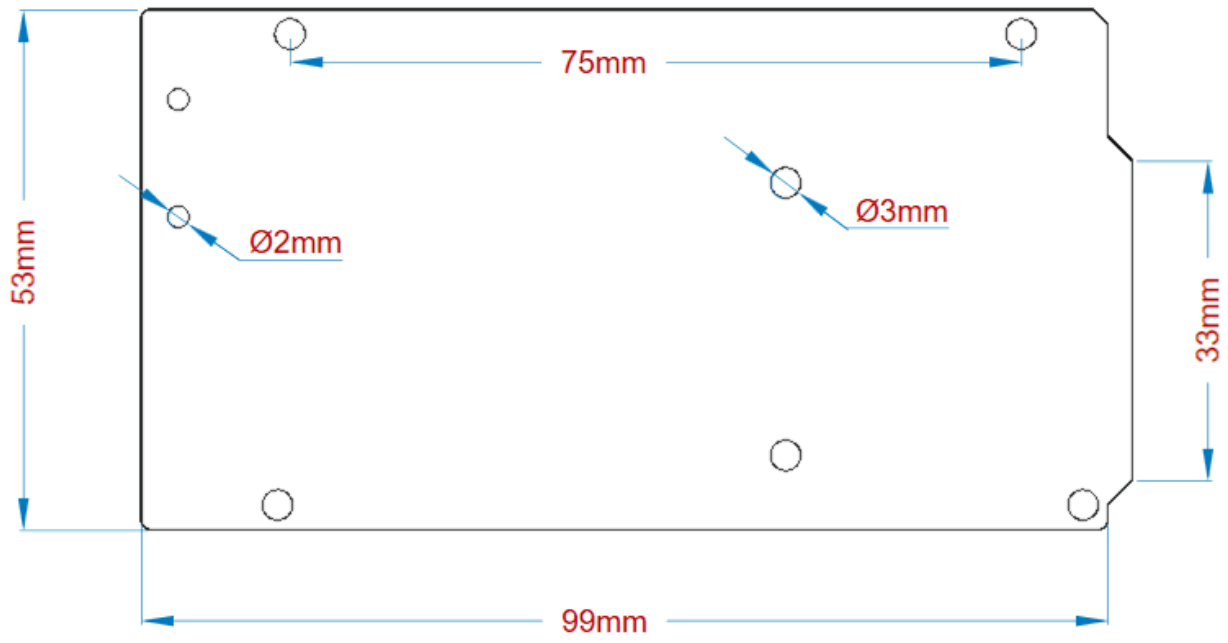

Arduino Mega 2560 Rev3 外形图

19.2 电路板安装孔

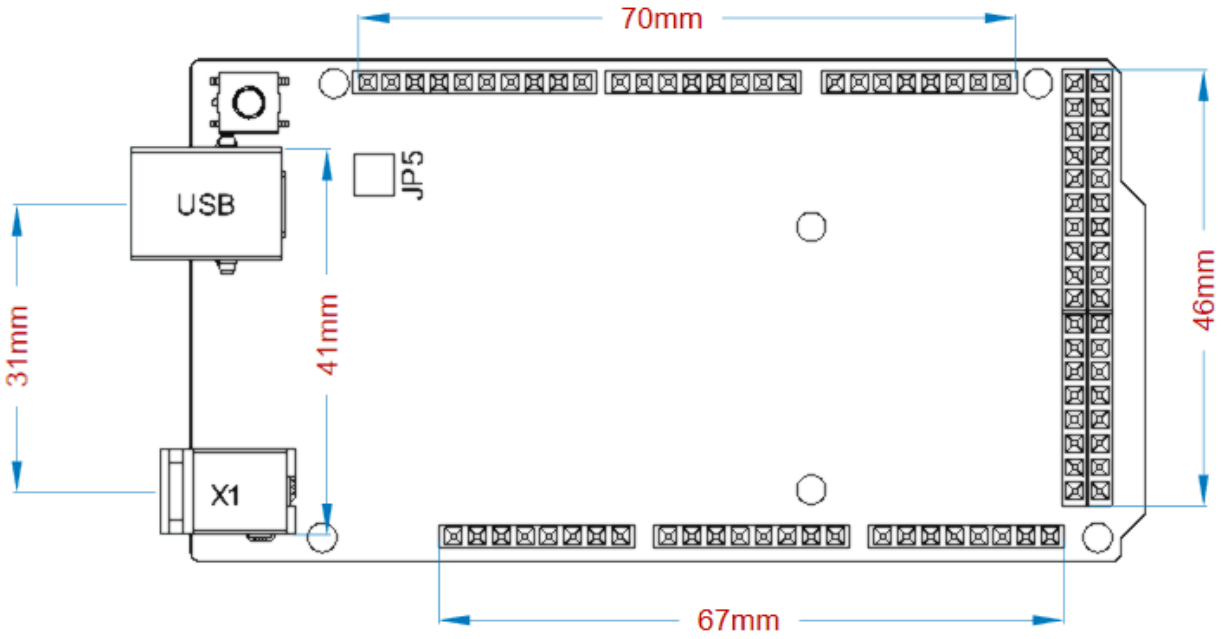

Arduino Mega 2560 Rev3 安装孔

认证

20 符合性声明 CE DoC（欧盟）

我们在此郑重声明，上述产品符合以下欧盟指令的基本要求，因此有资格在包括欧盟（EU）和欧洲经济区（EEA）在内的市场内自由流通。

21 声明符合欧盟 RoHS 和 REACH 211 01/19/2021

Arduino 电路板符合欧洲议会关于限制在电子电气设备中使用某些有害物质的 RoHS 2 指令 2011/65/EU 和欧盟理事会于 2015 年 6 月 4 日颁布的关于限制在电子电气设备中使用某些有害物质的 RoHS 3 指令 2015/863/EU。

物质	最大限值（ppm)
铅 (Pb)	1000
镉 (Cd)	100
汞 (Hg)	1000
六价铬（Cr6+）	1000
多溴联苯（PBB）	1000
多溴联苯醚（PBDE）	1000
邻苯二甲酸二(2-乙基己)酯 (DEHP)	1000
邻苯二甲酸丁苄酯 (BBP)	1000
邻苯二甲酸二丁酯（DBP）	1000
邻苯二甲酸二异丁酯（DIBP）	1000

豁免：未申请任何豁免。

Arduino 电路板完全符合欧盟法规 (EC) 1907/2006 中关于化学品注册、评估、许可和限制 (REACH) 的相关要求。我们声明，所有产品（包括包装）中的 SVHC (https://echa.europa.eu/web/guest/candidate-list-table), （欧洲化学品管理局目前发布的《高度关注物质候选授权清单》）含量总浓度均未超过 0.1%。据我们所知，我们还声明，我们的产品不含 ECHA（欧洲化学品管理局）1907/2006/EC 公布的候选清单附件 XVII 中规定的“授权清单”（REACH 法规附件 XIV）和高度关注物质 (SVHC) 所列的任何物质。

22 冲突矿产声明

作为电子和电气元件的全球供应商，Arduino 意识到我们有义务遵守有关冲突矿产的法律法规，特别是《多德-弗兰克华尔街改革与消费者保护法案》第 1502 条。Arduino 不直接采购或加工锡、钽、钨或金等冲突矿物。冲突矿物以焊料的形式或作为金属合金的组成部分存在于我们的产品中。作为我们合理尽职调查的一部分，Arduino 已联系供应链中的元件供应商，以核实他们是否始终遵守法规的相关规定。根据迄今收到的信息，我们声明我们的产品中含有来自非冲突地区的冲突矿物。

23 FCC 警告

任何未经合规性负责方明确批准的更改或修改都可能导致用户无权操作设备。

本设备符合 FCC 规则第 15 部分的规定。操作须满足以下两个条件：

(1) 此设备不会造成有害干扰

(2) 此设备必须接受接收到的任何干扰，包括可能导致不良操作的干扰。

FCC 射频辐射暴露声明：

1. 此发射器不得与任何其他天线或发射器放置在同一位置或同时运行。
2. 此设备符合为非受控环境规定的射频辐射暴露限值。
3. 安装和操作本设备时，辐射源与您的身体之间至少应保持 20 厘米的距离。

English: User manuals for license-exempt radio apparatus shall contain the following or equivalent notice in a conspicuous location in the user manual or alternatively on the device or both. This device complies with Industry Canada license-exempt RSS standard(s). Operation is subject to the following two conditions:

(1) this device may not cause interference

(2) this device must accept any interference, including interference that may cause undesired operation of the device.

French: Le présent appareil est conforme aux CNR d'Industrie Canada applicables aux appareils radio exempts de licence. L'exploitation est autorisée aux deux conditions suivantes :

(1) l' appareil nedoit pas produire de brouillage

(2) l'utilisateur de l'appareil doit accepter tout brouillage radioélectrique subi, même si le brouillage est susceptible d'en compromettre le fonctionnement.

IC SAR警告：

English This equipment should be installed and operated with a minimum distance of 20 cm between the radiator and your body.

French: Lors de l' installation et de l' exploitation de ce dispositif, la distance entre le radiateur et le corps est d 'au moins 20 cm.

重要提示： EUT 的工作温度不能超过 85°C，也不能低于 -40°C。

Arduino S.r.l. 特此声明，本产品符合 201453/EU 指令的基本要求和其他相关规定。本产品允许在所有欧盟成员国使用。

24 公司信息

公司名称	**Arduino S.r.l.**
公司地址	Via Andrea Appiani 25, 20900 MONZA MB, Italy

25 参考资料

参考资料	链接
Arduino IDE (Desktop)	https://www.arduino.cc/en/Main/Software
Arduino Cloud Editor	https://create.arduino.cc/editor
Arduino Cloud Editor - 入门指南	https://docs.arduino.cc/arduino-cloud/guides/editor/
Arduino 网站	https://www.arduino.cc/
Arduino Project Hub	https://create.arduino.cc/projecthub?by=part&part_id=11332&sort=trending
库参考	https://www.arduino.cc/reference/en/libraries/
在线商店	https://store.arduino.cc/

26 修订记录

日期	版次	变更
25/04/2024	3	新的 Cloud Editor 的更新链接
09/10/2023	2	更新的建议运行条件
29/09/2020	1	首次发布