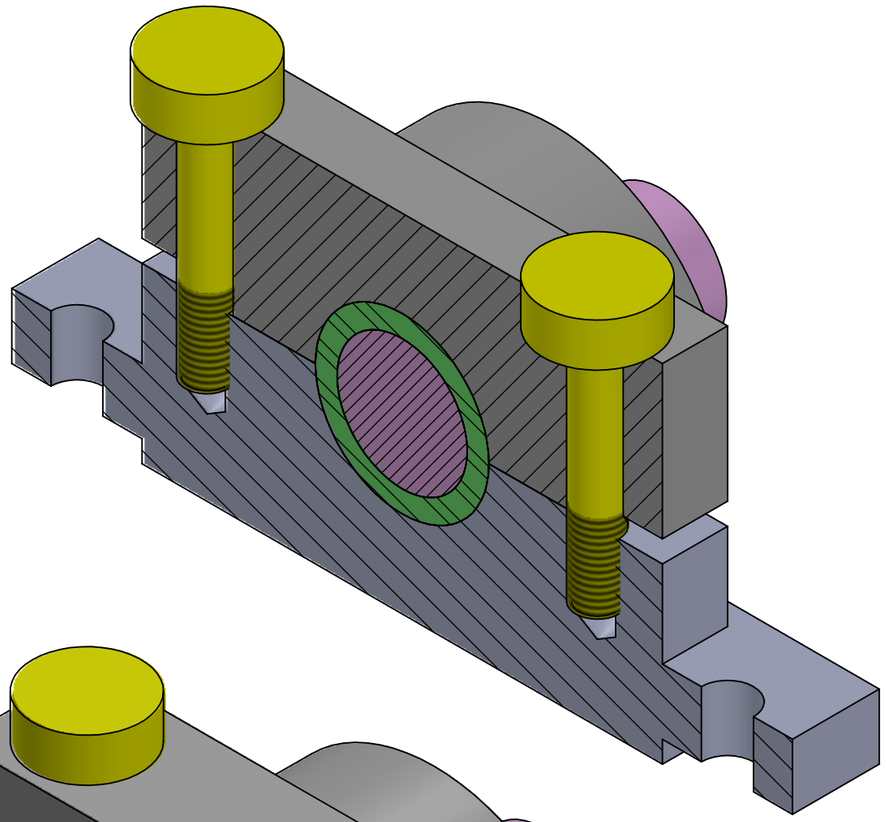

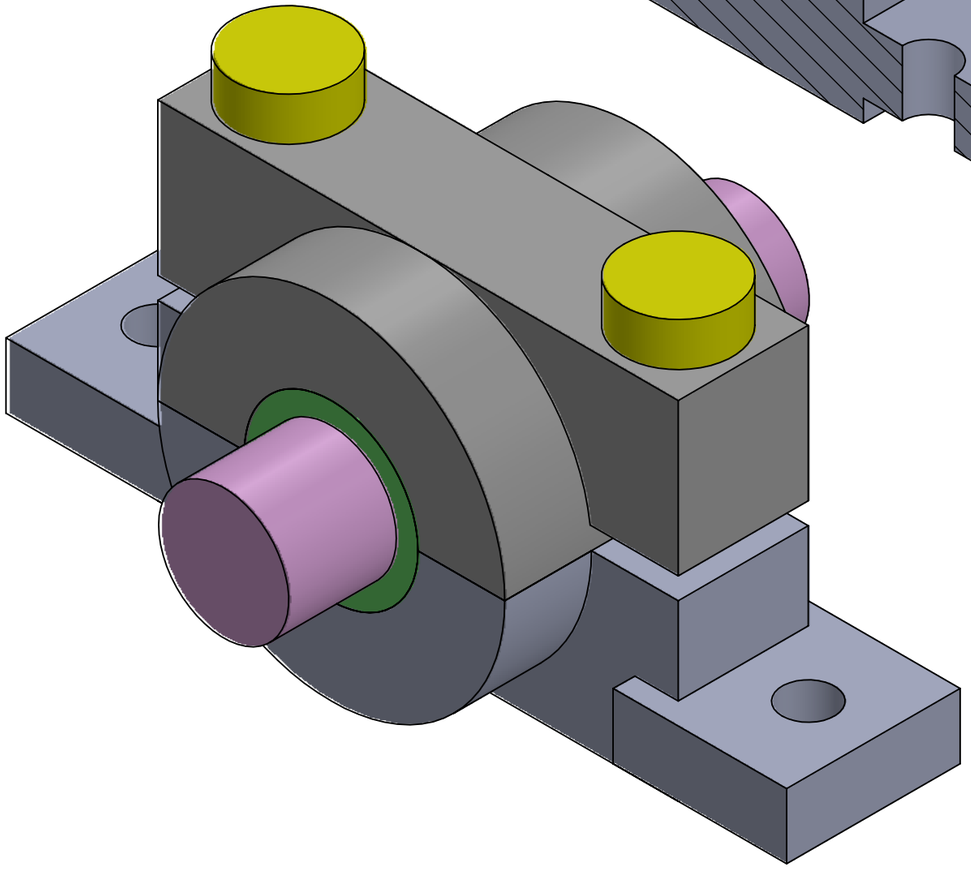

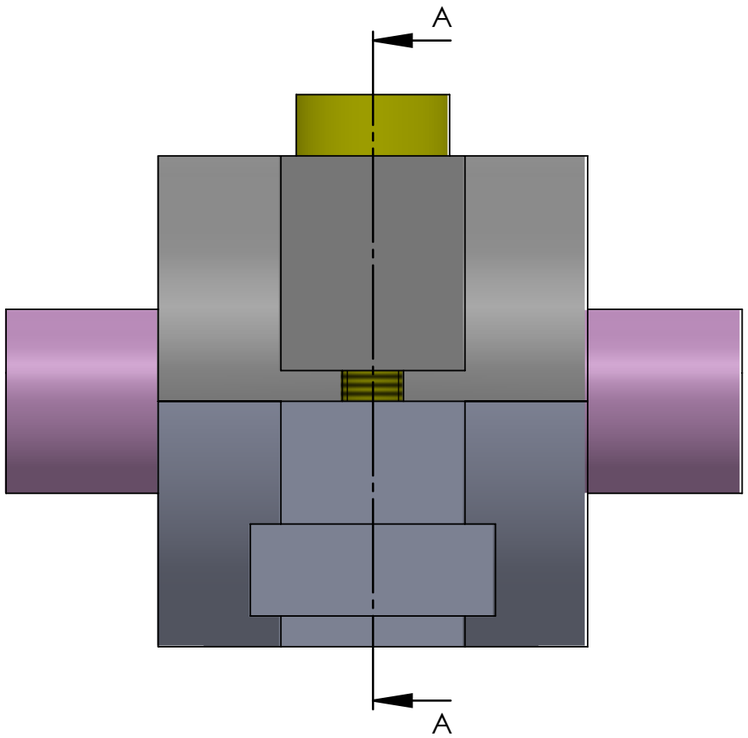

UNLESS OTHERWISE SPECIFIED: DIMENSIONS ARE IN MILLIMETERS SURFACE FINISH: TOLERANCES: LINEAR: ANGULAR:	FINISH:			DEBURR AND BREAK SHARP EDGES		DO NOT SCALE DRAWING	REVISION
	NAME	SIGNATURE	DATE			TITLE: ASSEMBLY DRAWING II	
DRAWN	BIBEK MAGAR						
CHK'D							
APPV'D							
MFG							
Q.A				MATERIAL:		DWG NO. 10.1	A3
				WEIGHT:		SCALE:1:2	SHEET 1 OF 1