FPGA BLOCK DIAGRAM OF INTEGRATED DATA ACQUISITION BOARD

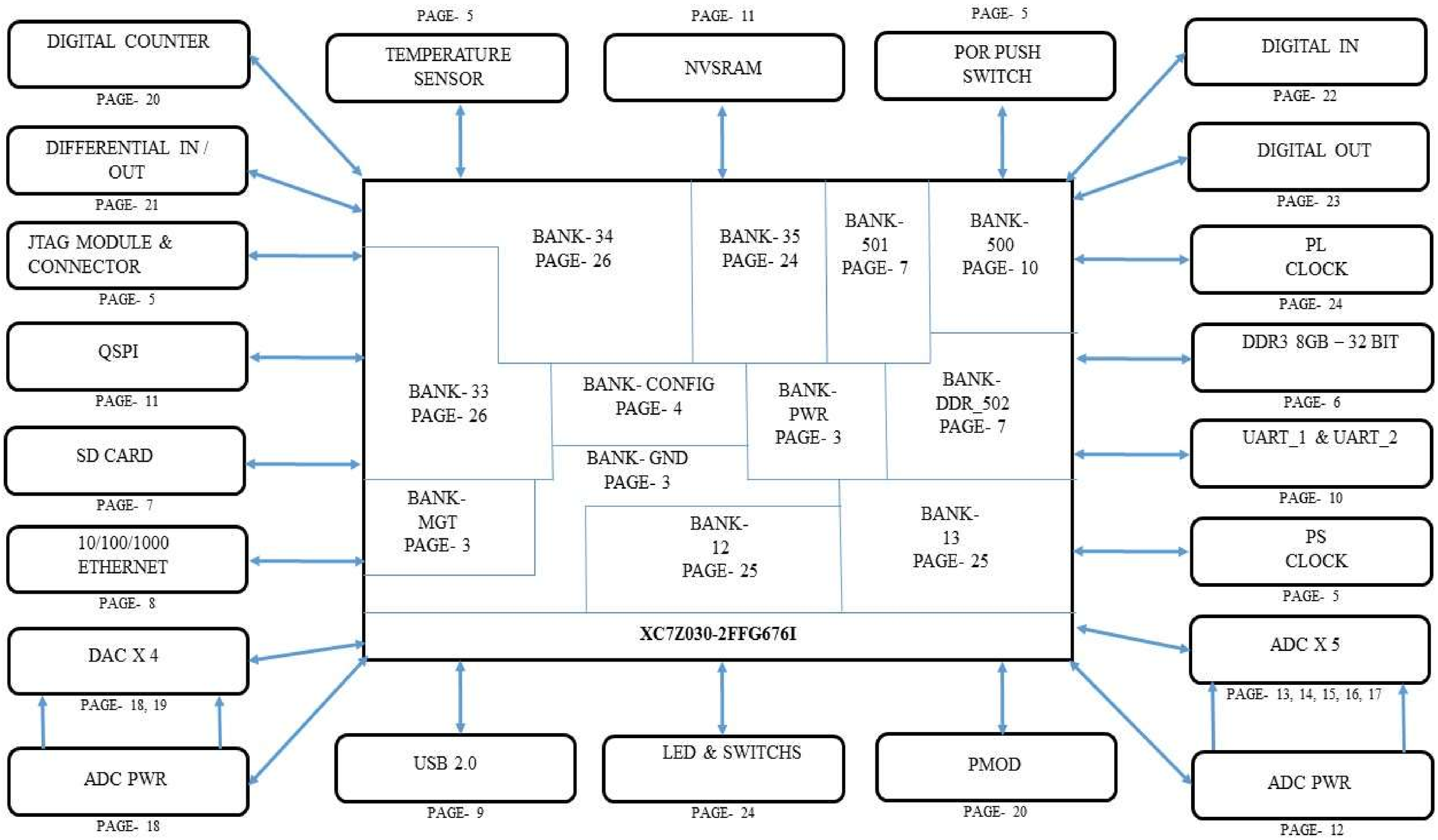

DRN BY	*<DRN BY>*
CHKD BY	*<CHKD BY>*
APPD BY	*<APPD BY>*

PROPRIETARY INFORMATION
NO DISSEMINATION OR USE ALLOWED WITHOUT PRIOR WRITTEN PERMISSION.

EXPLORER ELECTRONICS
43/A, GOBINDA BASU LANE, HALISAHAR,
KOLKATA, 743134, WEST BENGAL, INDIA.

Title: INTEGRATED DATA ACQUISITION BOARD

Size	Document Number	Rev
A3	POWER BLOCK	?

Date: Saturday, October 04, 2025 Sheet 1 of 27

POWER SUPPLY & CONNECTORS BLOCK DIAGRAM OF INTEGRATED DATA ACQUISITION BOARD

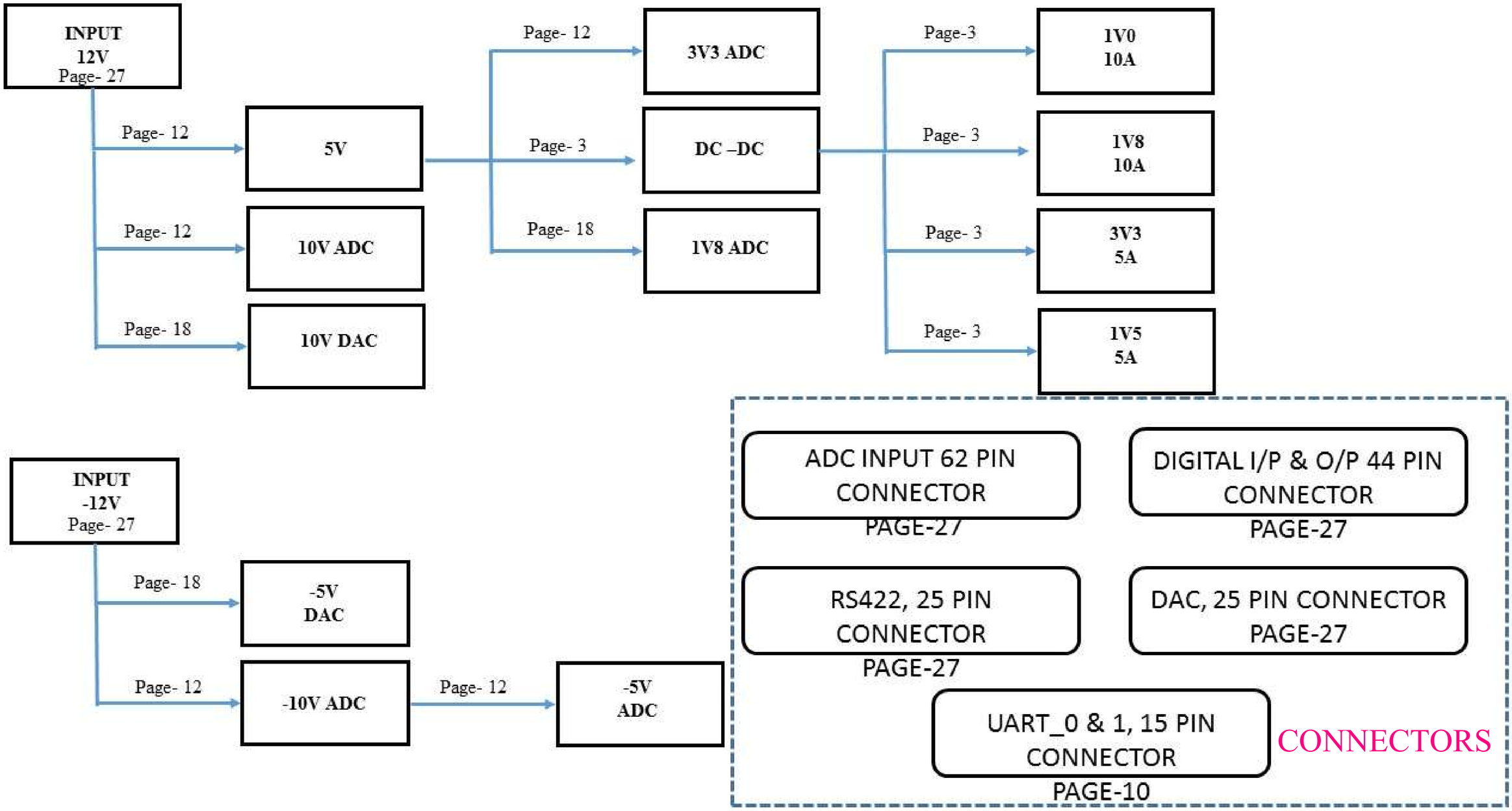

DRN BY	<DRN BY>	EXPLORER ELECTRONICS 43/A, GOBINDA BASU LANE, HALISAHAR, KOLKATA, 743134, WEST BENGAL, INDIA.	
CHKD BY	<CHKD BY>	Title INTEGRATED DATA ACQUISITION BOARD	
APPD BY	<APPD BY>	Size A3	Document Number FPGA BLOCK	Rev ?
PROPRIETARY INFORMATION NO DISSEMINATION OR USE ALLOWED WITHOUT PRIOR WRITTEN PERMISSION.		Date: Saturday, October 04, 2025	Sheet 2 of 27

POWER SUPPLY

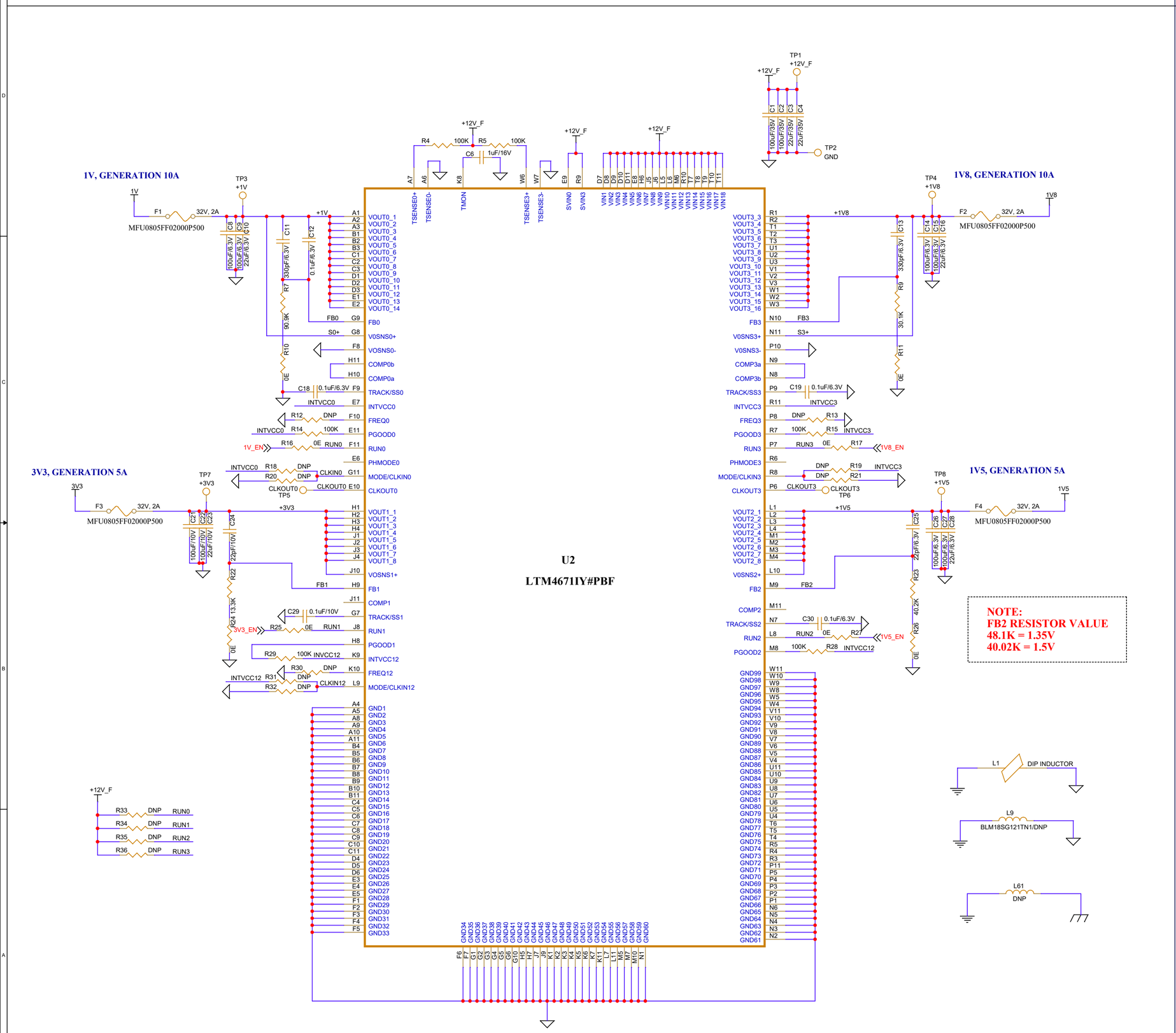

POWER SEQUENCING CIRCUIT

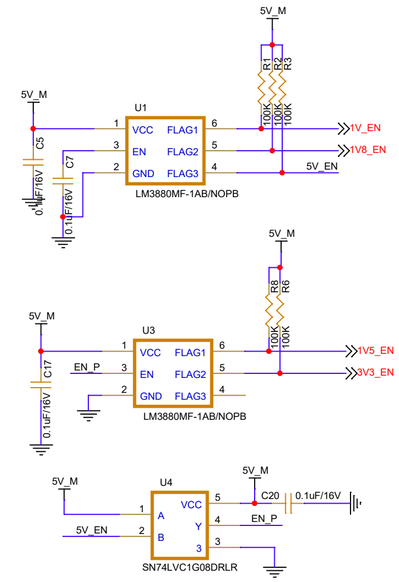

5V DIGITAL

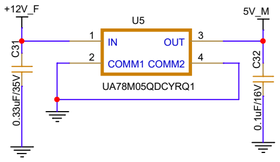

COMMON MODE CHOKE

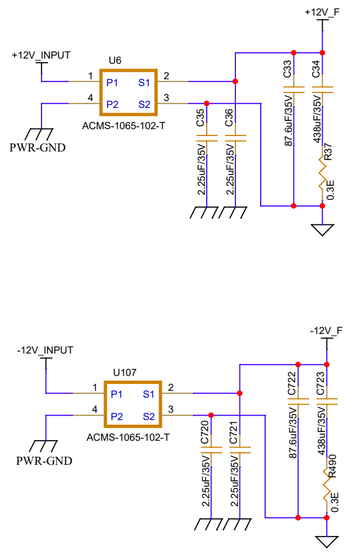

DRN BY	<DRN BY>	EXPLORER ELECTRONICS 43/A, GOBINDA BASU LANE, HALISAHAR, KOLKATA, 743134, WEST BENGAL, INDIA.
CHKD BY	<CHKD BY>	Title INTEGRATED DATA ACQUISITION BOARD
APPD BY	<APPD BY>	Size A2 · Document Number POWER GENERATION · Rev ?
PROPRIETARY INFORMATION NO DISSEMINATION OR USE ALLOWED WITHOUT PRIOR WRITTEN PERMISSION.		Date: Saturday, October 04, 2025 · Sheet 3 of 27

FPGA POWER BANK

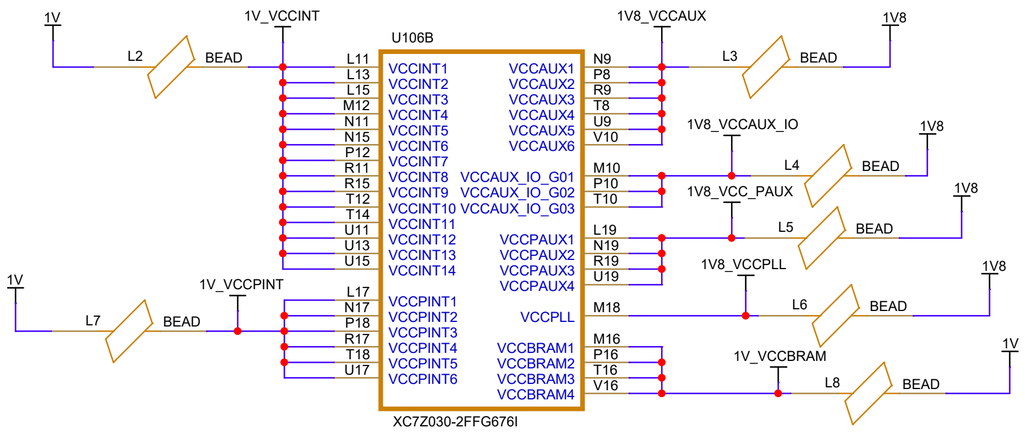

FPGA POWER BANK - DECOUPLING CAPACITORS

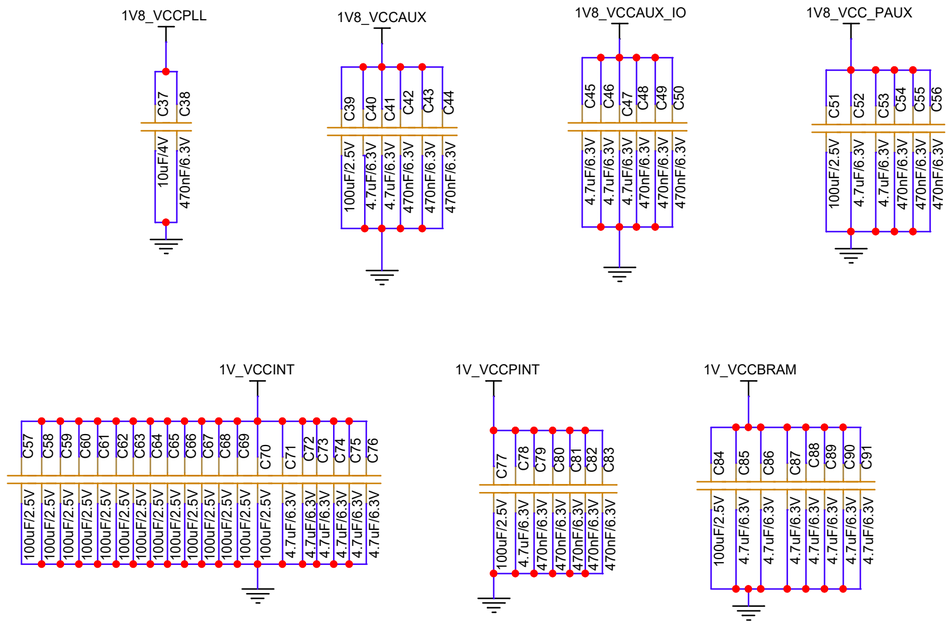

FPGA GROUND BANK

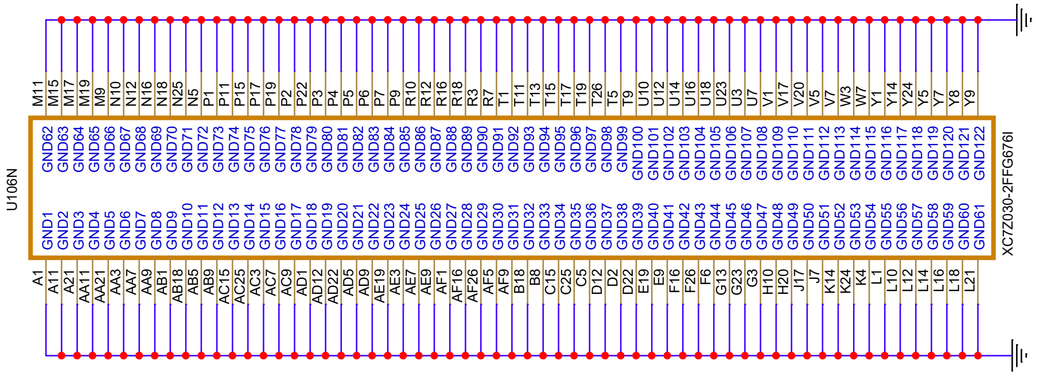

FPGA UNUSED MGT BANK

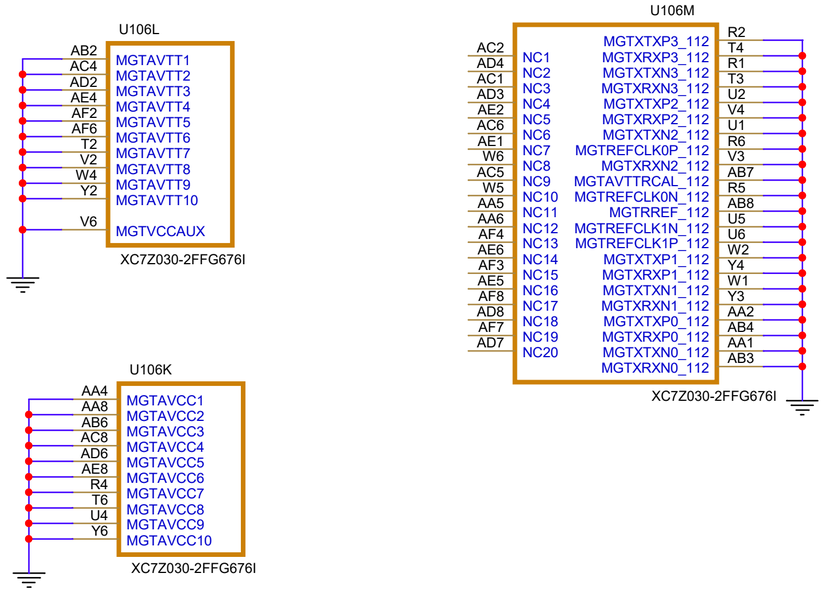

DRN BY	*<DRN BY>*	EXPLORER ELECTRONICS 43/A, GOBINDA BASU LANE, HALISAHAR, KOLKATA, 743134, WEST BENGAL, INDIA.
CHKD BY	*<CHKD BY>*	Title INTEGRATED DATA ACQUISITION BOARD
APPD BY	*<APPD BY>*	Size A3 — Document Number: DECOUPLING & GND BANK — Rev ?
PROPRIETARY INFORMATION *NO DISSEMINATION OR USE ALLOWED WITHOUT PRIOR WRITTEN PERMISSION.*		Date: Saturday, October 04, 2025 — Sheet 4 of 27

PROCESSOR CLOCK

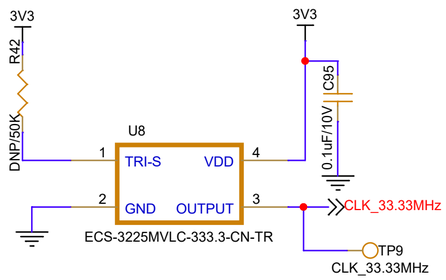

POWER ON RESET

C44 VALUE
140ms(DELAY) INTERNALY FIXED
WE PUT DNP FOR ADJUSTABLE
DELAY TIMMING.

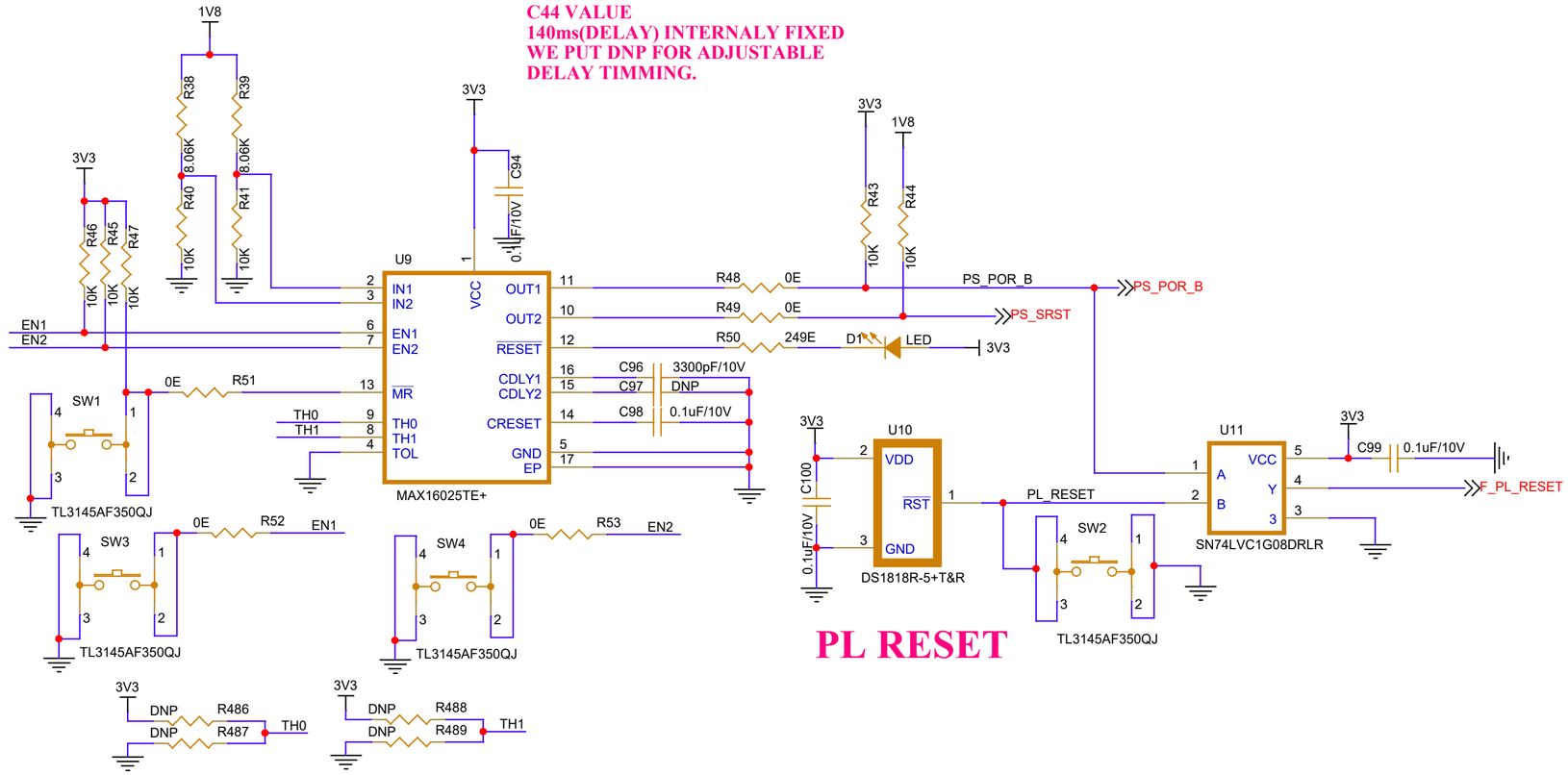

PL RESET

CONFIGURATION BANK

JTAG

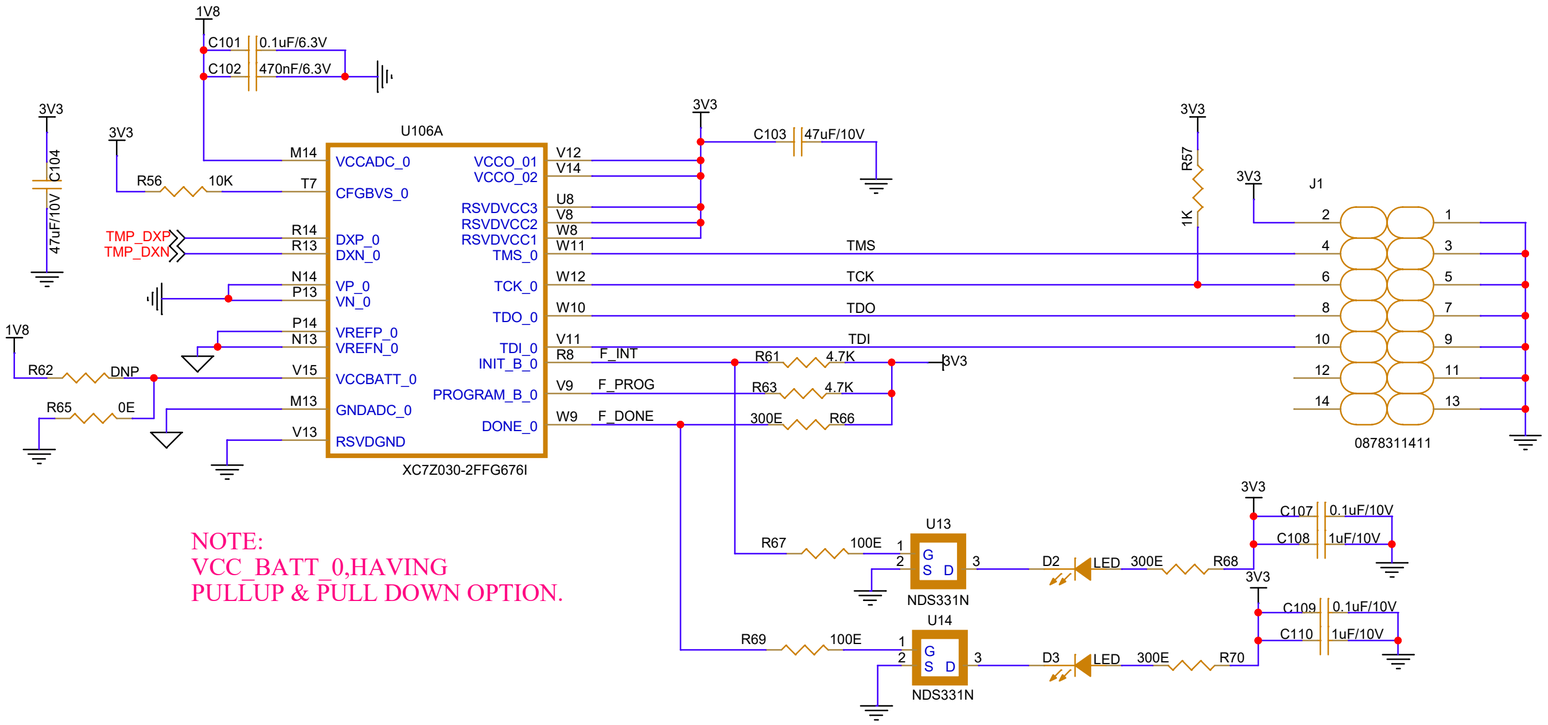

NOTE:
VCC_BATT_0,HAVING
PULLUP & PULL DOWN OPTION.

TEMPERATURE SENSOR

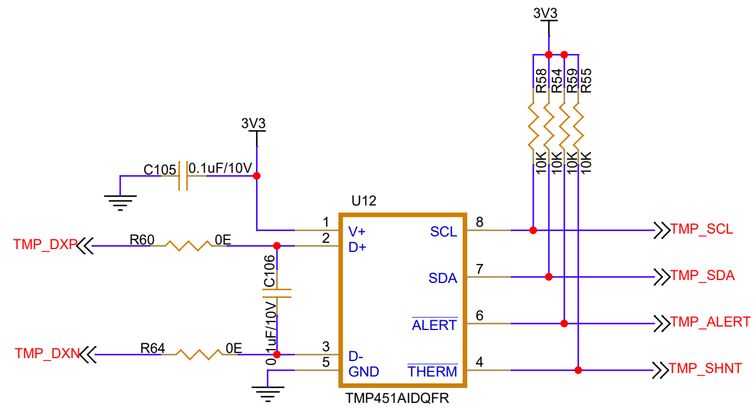

DRN BY	<DRN BY>	EXPLORER ELECTRONICS 43/A, GOBINDA BASU LANE, HALISAHAR, KOLKATA, 743134, WEST BENGAL, INDIA.
CHKD BY	<CHKD BY>	Title: INTEGRATED DATA ACQUISITION BOARD
APPD BY	<APPD BY>	Size: A3 — Document Number: POR_CONFIG_TEMP/S_CLOCK — Rev: ?
PROPRIETARY INFORMATION NO DISSEMINATION OR USE ALLOWED WITHOUT PRIOR WRITTEN PERMISSION.		Date: Saturday, October 04, 2025 — Sheet 5 of 27

DDR3 - 8Gb - 32 BIT MEMORY

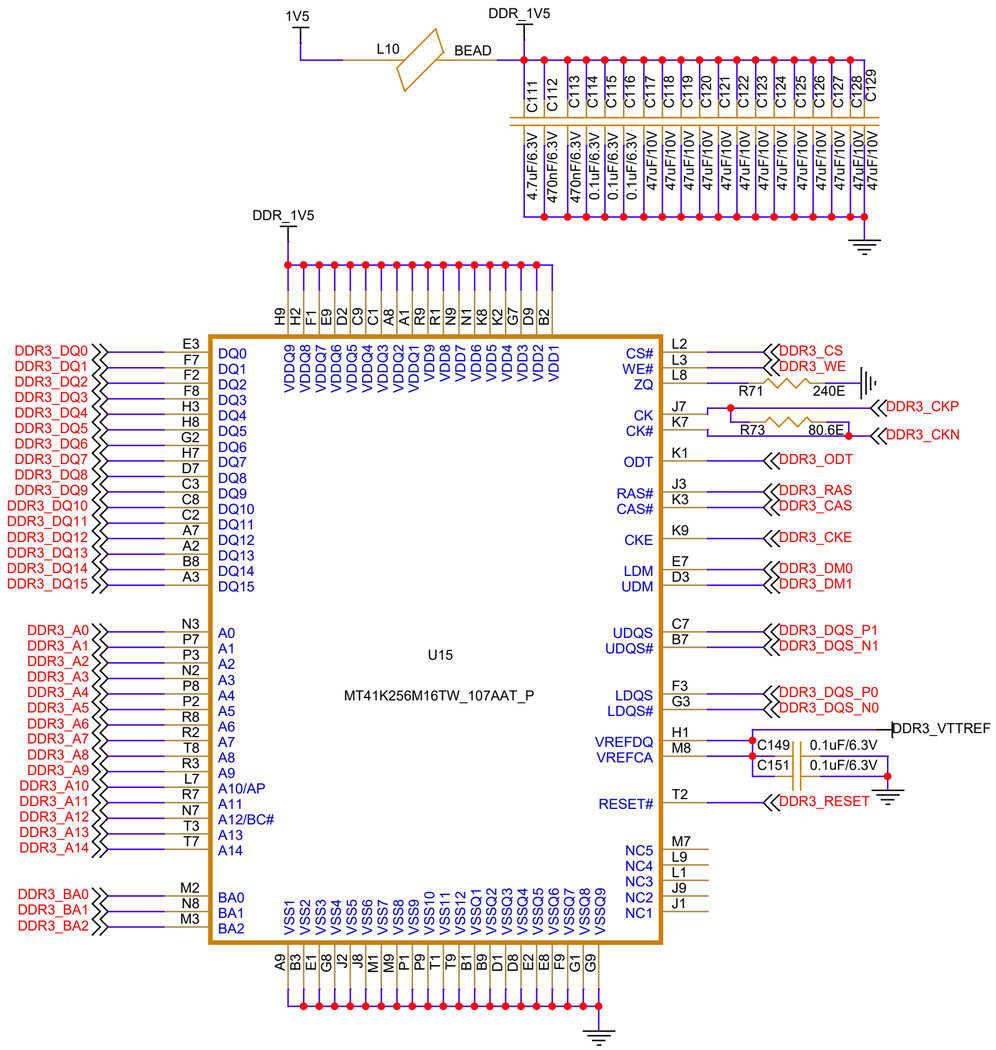

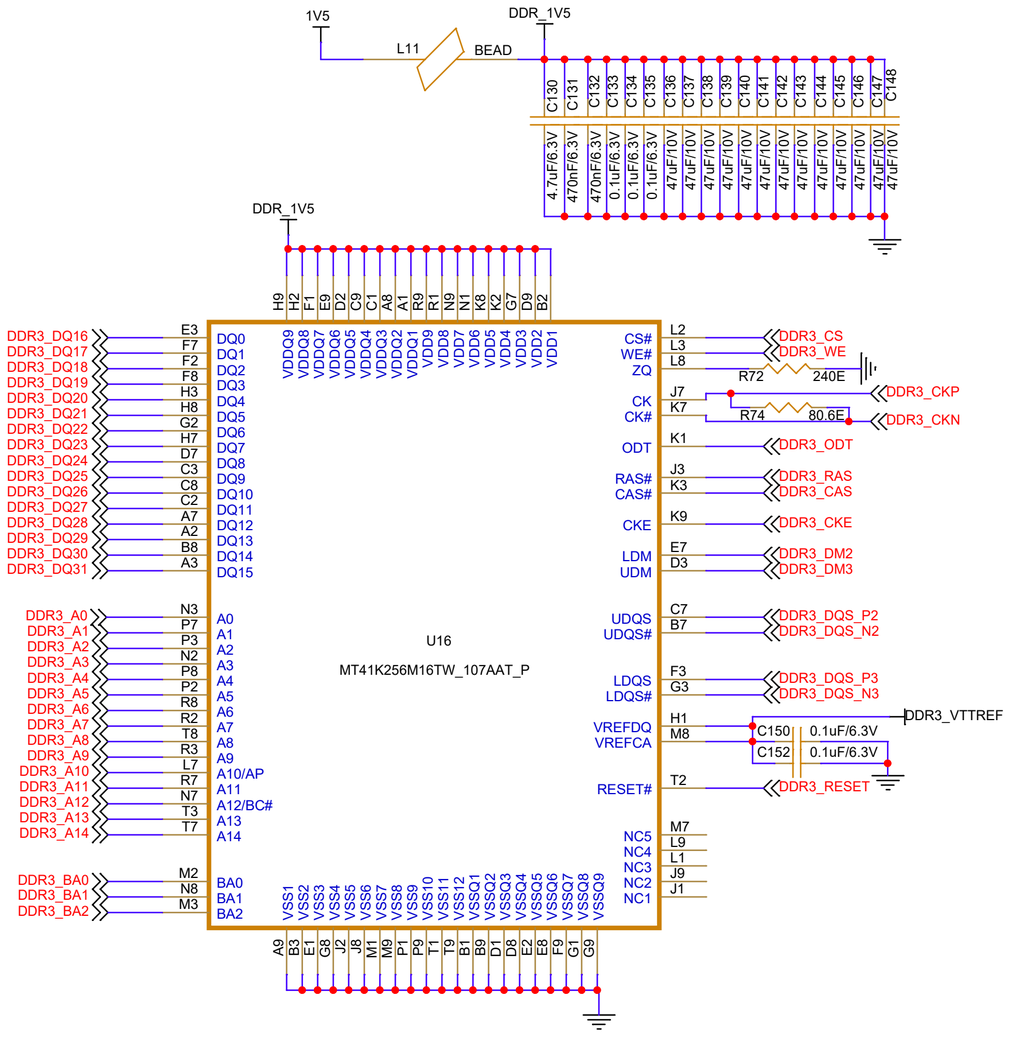

DDR3 REFERENCE & TERMINATION SUPPLY (0.75V)

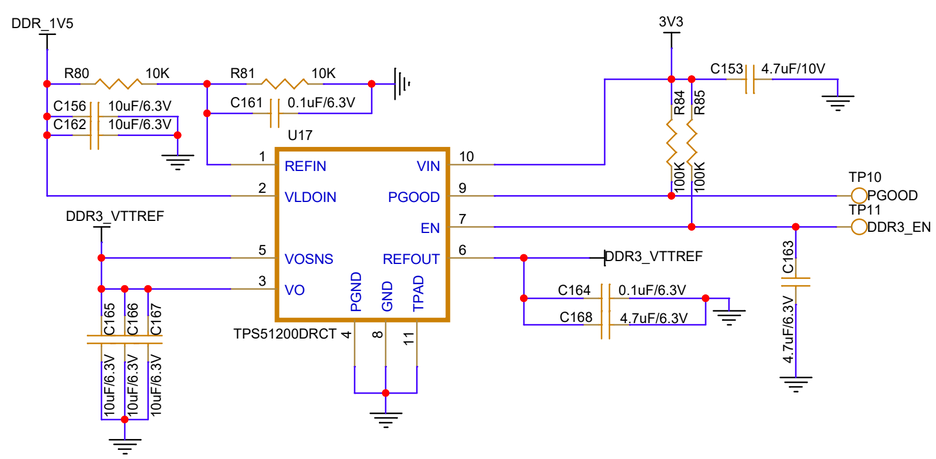

DDR3 TERMINATION RESISTORS

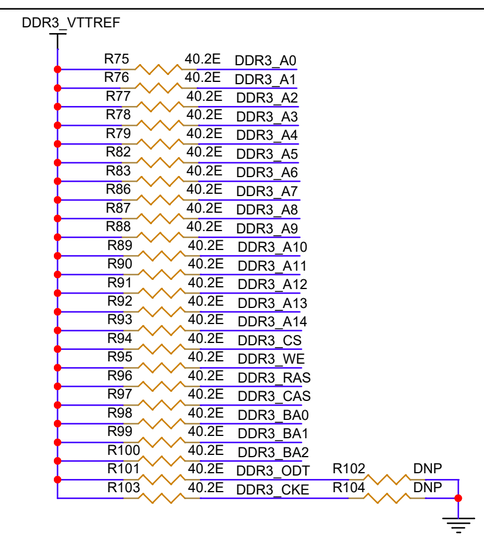

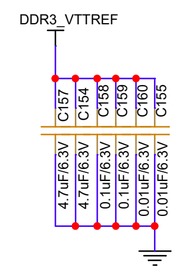

DRN BY	<DRN BY>	EXPLORER ELECTRONICS 43/A, GOBINDA BASU LANE, HALISAHAR, KOLKATA, 743134, WEST BENGAL, INDIA.
CHKD BY	<CHKD BY>	Title: INTEGRATED DATA ACQUISITION BOARD
APPD BY	<APPD BY>	Size: A3 — Document Number: DDR3 DETAILS — Rev: ?
PROPRIETARY INFORMATION. NO DISSEMINATION OR USE ALLOWED WITHOUT PRIOR WRITTEN PERMISSION.		Date: Saturday, October 04, 2025 — Sheet 6 of 27

DDR3 - FPGA INTERFACE

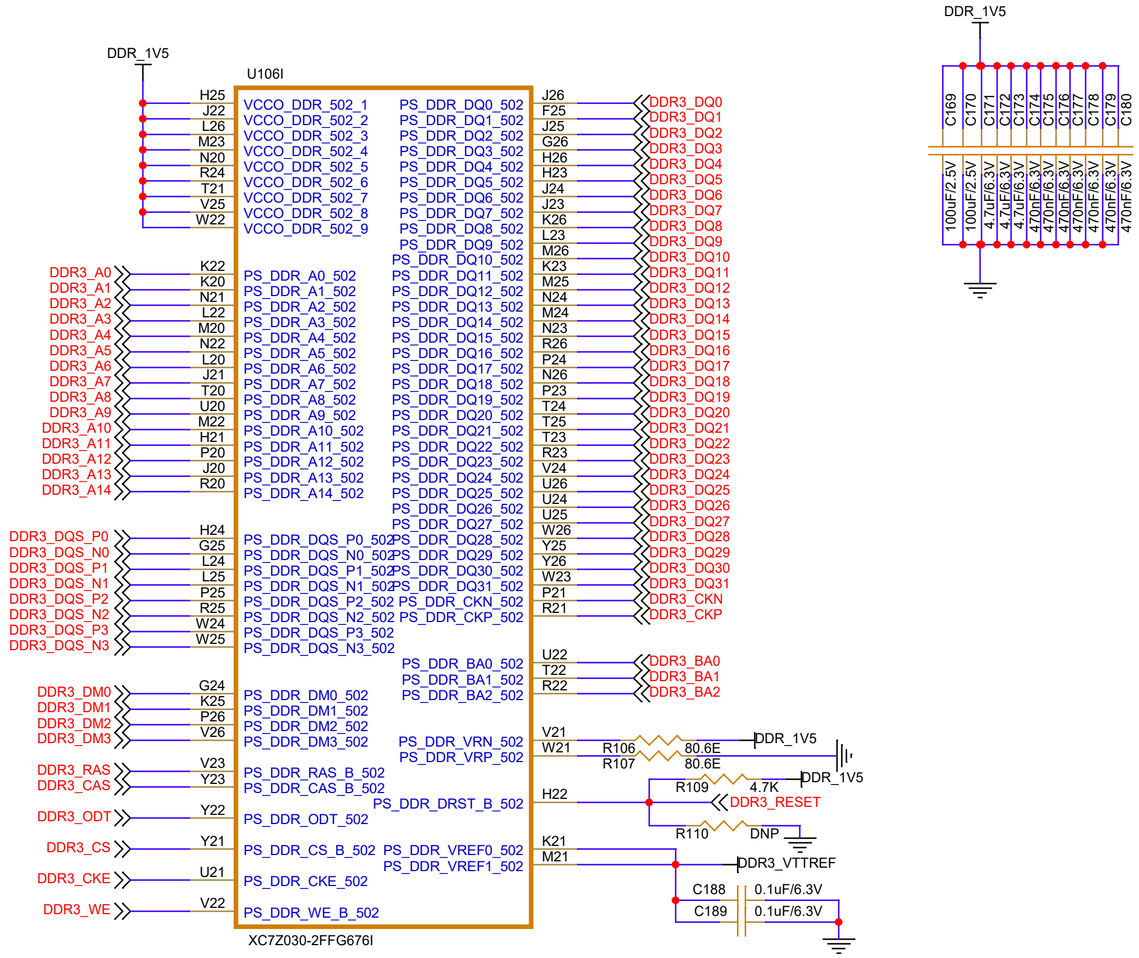

PS - MIO BANK 501

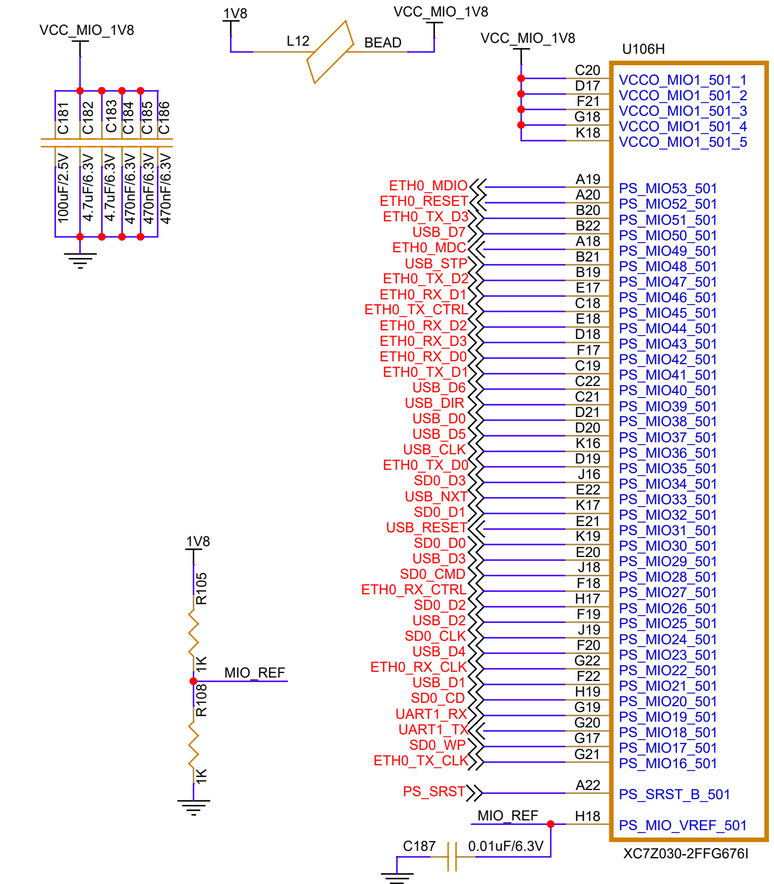

SD CARD DETAILS

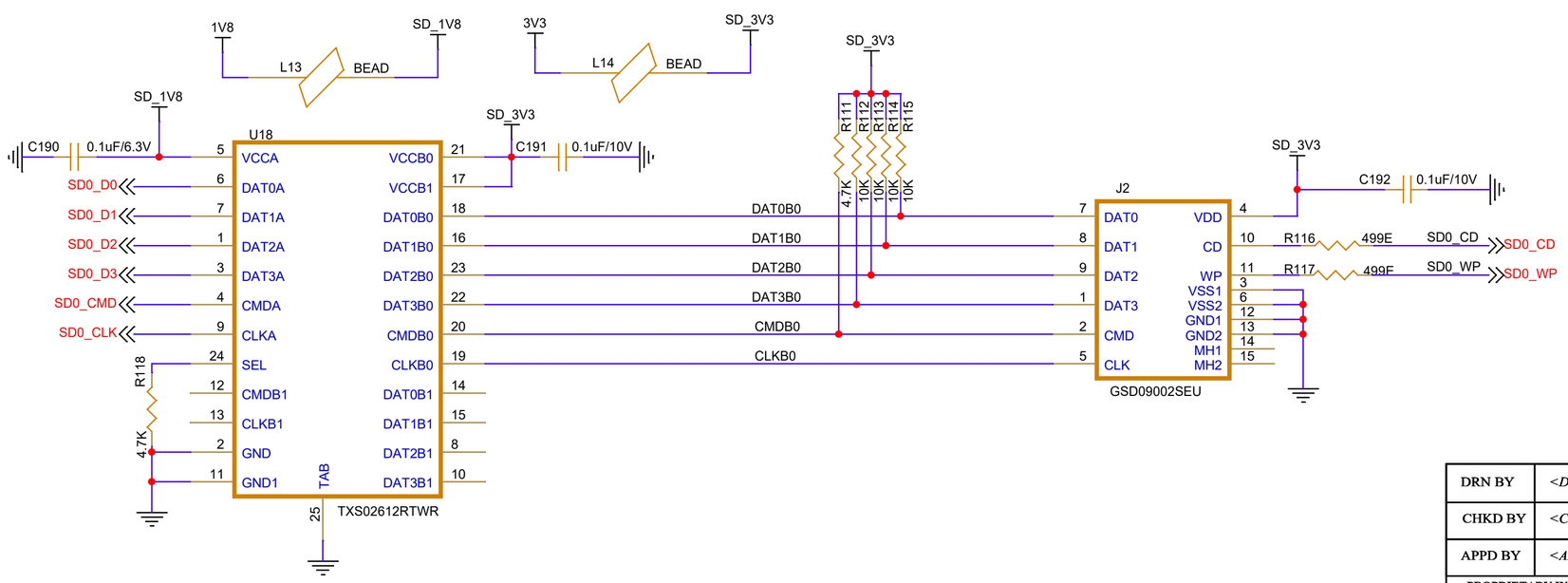

DRN BY	<DRN BY>	EXPLORER ELECTRONICS 43/A, GOBINDA BASU LANE, HALISAHAR, KOLKATA, 743134, WEST BENGAL, INDIA.
CHKD BY	<CHKD BY>	Title: INTEGRATED DATA ACQUISITION BOARD
APPD BY	<APPD BY>	Size: A3 — Document Number: DDR3_MIO501 & SD CARD — Rev: ?
PROPRIETARY INFORMATION. NO DISSEMINATION OR USE ALLOWED WITHOUT PRIOR WRITTEN PERMISSION.		Date: Saturday, October 04, 2025 — Sheet 7 of 27

[88E1512-A0-NNP2I000] - ETHERNET 10/100/1000Mbps

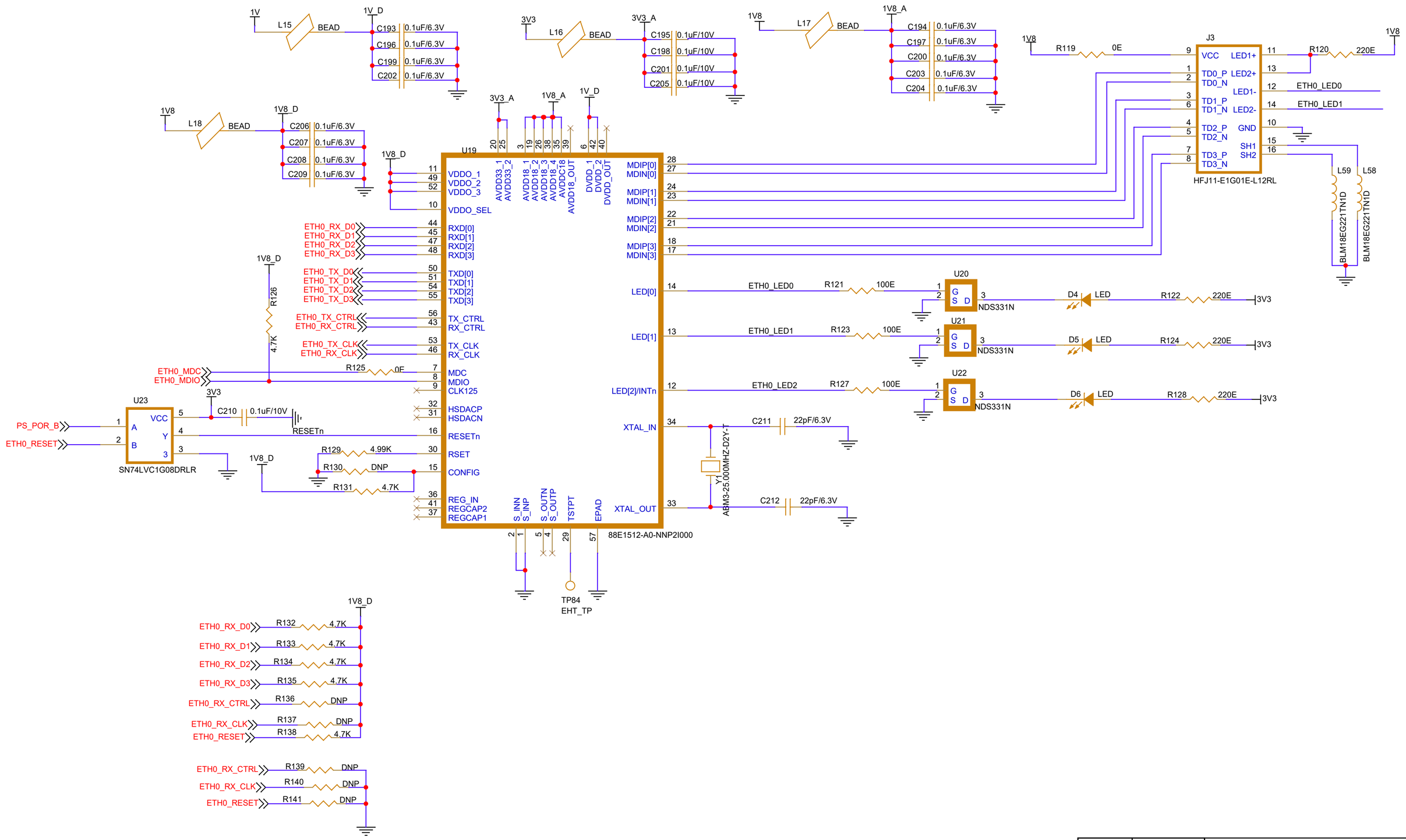

DRN BY	<DRN BY>	EXPLORER ELECTRONICS 43/A, GOBINDA BASU LANE, HALISAHAR, KOLKATA, 743134, WEST BENGAL, INDIA.
CHKD BY	<CHKD BY>	Title: INTEGRATED DATA ACQUISITION BOARD
APPD BY	<APPD BY>	Size: A3 — Document Number: ETHERNET DETAILS — Rev: ?
PROPRIETARY INFORMATION NO DISSEMINATION OR USE ALLOWED WITHOUT PRIOR WRITTEN PERMISSION.		Date: Saturday, October 04, 2025 — Sheet 8 of 27

USB 2.0 DETAILS

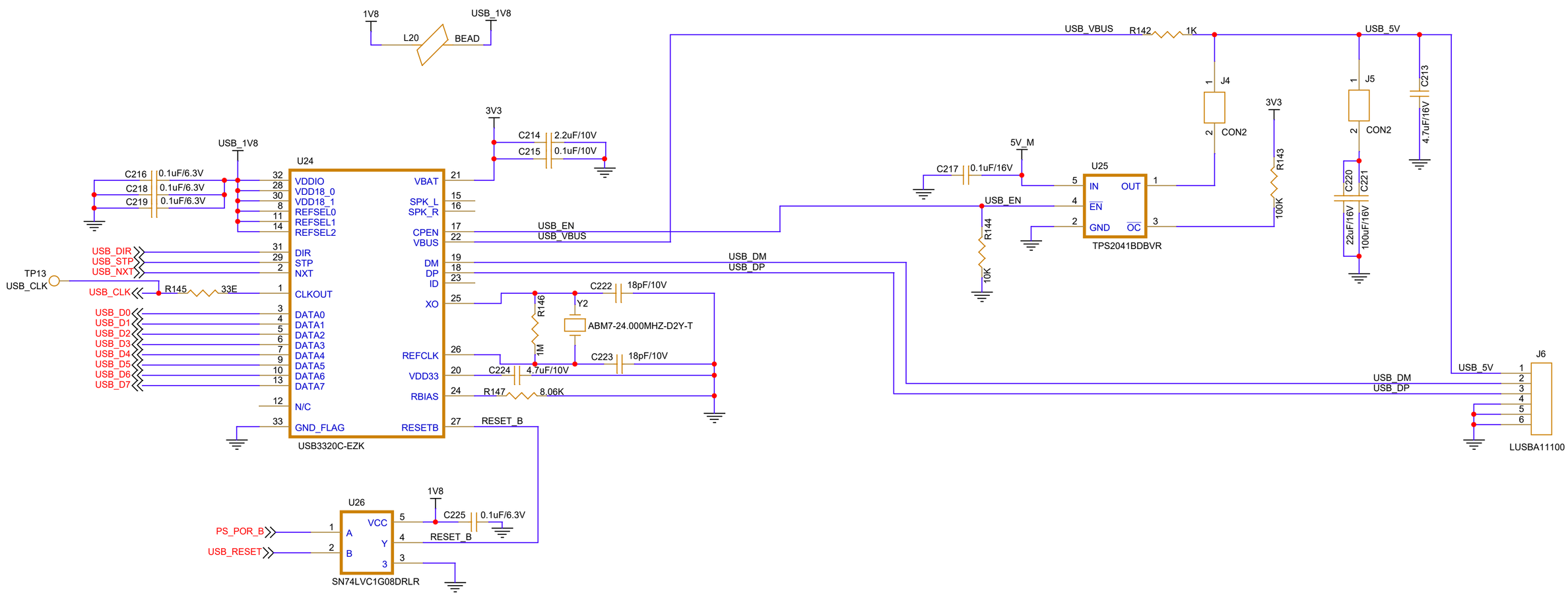

DRN BY	<DRN BY>
CHKD BY	<CHKD BY>
APPD BY	<APPD BY>

PROPRIETARY INFORMATION
NO DISSEMINATION OR USE ALLOWED WITHOUT PRIOR WRITTEN PERMISSION.

EXPLORER ELECTRONIC
43/A, GOBINDA BASU LANE, HALISAHAR,
KOLKATA, 743134, WEST BENGAL, INDIA.

Title
INTEGRATED DATA ACQUISITION BOARD

Size	Document Number	Rev
A3	USB DETAILS	?

Date: Saturday, October 04, 2025 Sheet 9 of 27

UART_0- RS232

UART_1- RS422

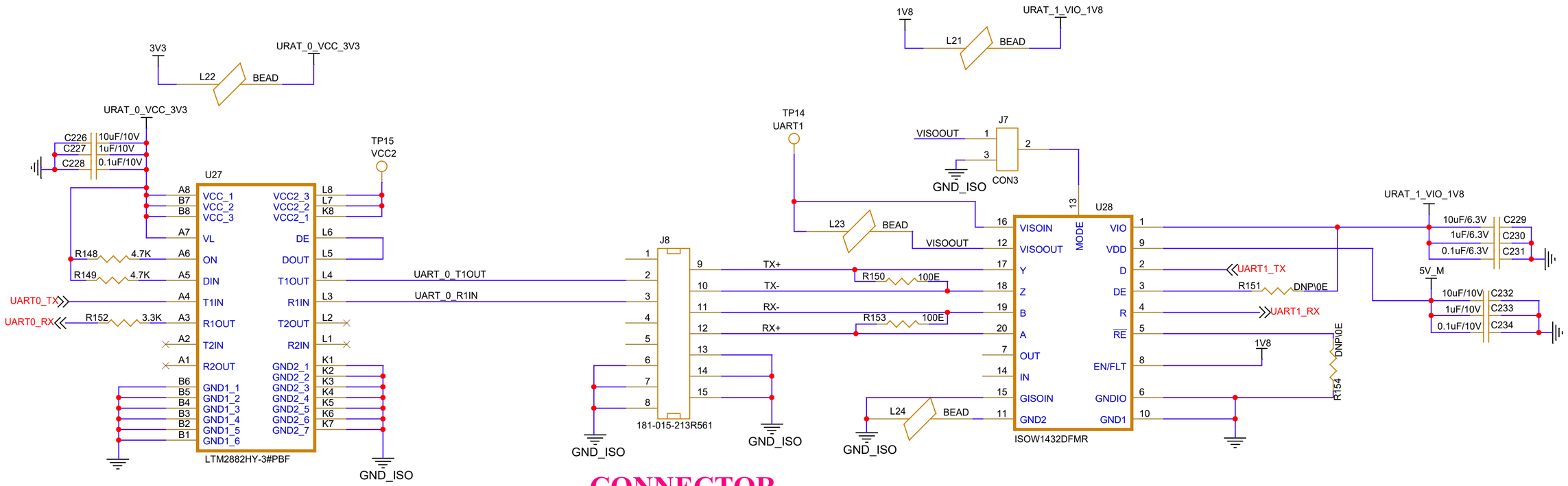

CONNECTOR

DRN BY	<DRN BY>	EXPLORER ELECTRONICS 43/A, GOBINDA BASU LANE, HALISAHAR, KOLKATA, 743134, WEST BENGAL, INDIA.
CHKD BY	<CHKD BY>	Title INTEGRATED DATA ACQUISITION BOARD
APPD BY	<APPD BY>	Size A3 / Document Number UART 1 & 2 / Rev ?
PROPRIETARY INFORMATION NO DISSEMINATION OR USE ALLOWED WITHOUT PRIOR WRITTEN PERMISSION.		Date: Saturday, October 04, 2025 / Sheet 10 of 27

RTC / NVSRAM

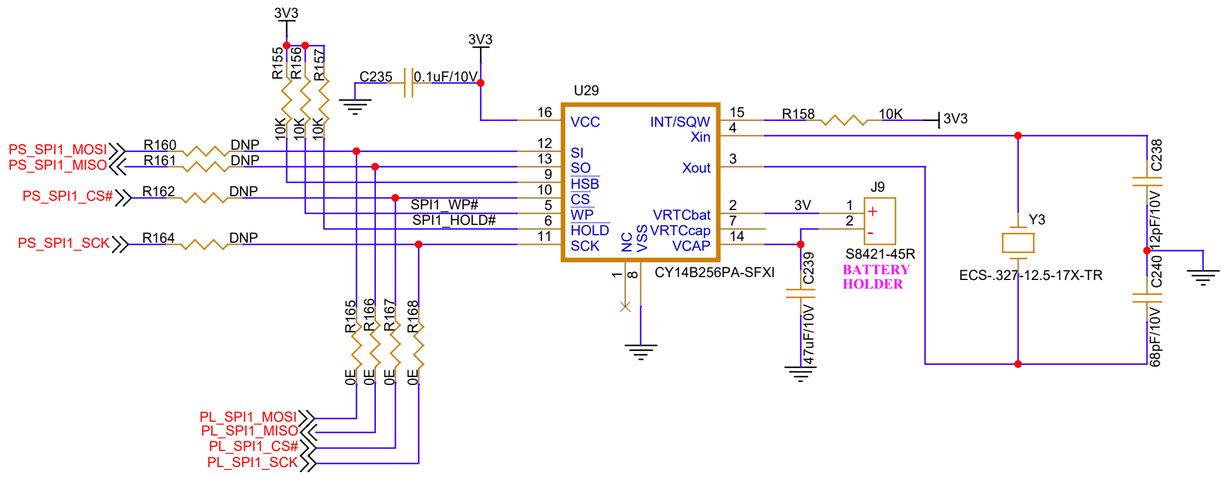

QSPI FLASH - 512Mb

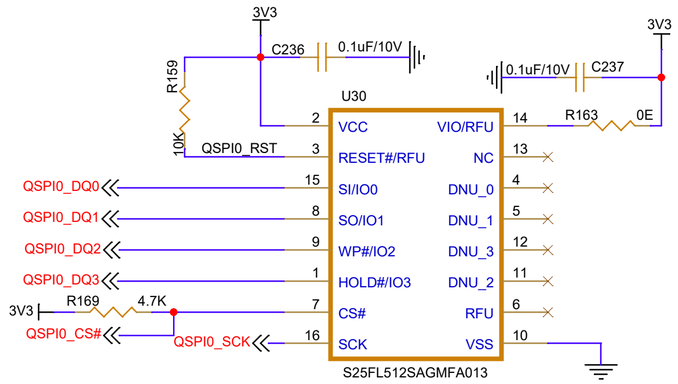

BOOT MODE SELECTION SWITCH

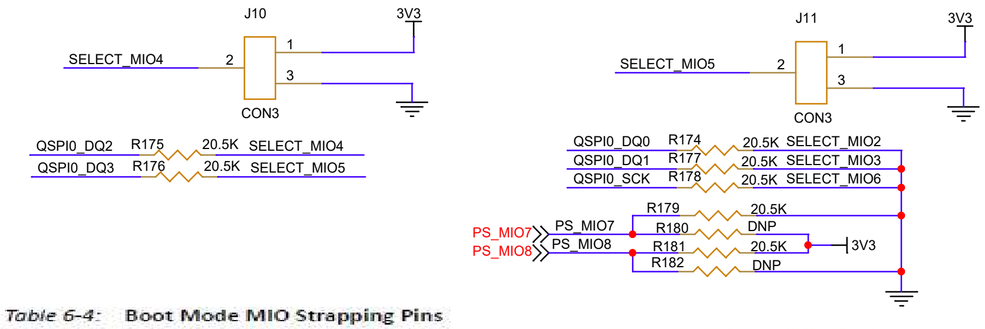

Table 6-4: Boot Mode MIO Strapping Pins

Pin-signal / Mode	MIO[8]	MIO[7]	MIO[6]	MIO[5]	MIO[4]	MIO[3]	MIO[2]
	VMODE[1]	VMODE[0]	BOOT_MODE[4]	BOOT_MODE[0]	BOOT_MODE[2]	BOOT_MODE[1]	BOOT_MODE[3]
Boot Devices							
JTAG Boot Mode; cascaded is most common[1]				0	0	0	JTAG Chain Routing[2]
NOR Boot[3]				0	0	1	
NAND				0	1	0	0: Cascade mode
Quad-SPI[3]				1	0	0	1: Independent mode
SD Card				1	1	0	
Mode for all 3 PLLs							
PLL Enabled			0	Hardware waits for PLL to lock, then executes BootROM.			
PLL Bypassed			1	Allows for a wide PS_CLK frequency range.			
MIO Bank Voltage[4]							
	Bank 1	Bank 0	Voltage Bank 0 includes MIO pins 0 thru 15. Voltage Bank 1 includes MIO pins 16 thru 53.				
2.5 V, 3.3 V	0	0					
1.8 V	1	1					

PS - MIO BANK 500

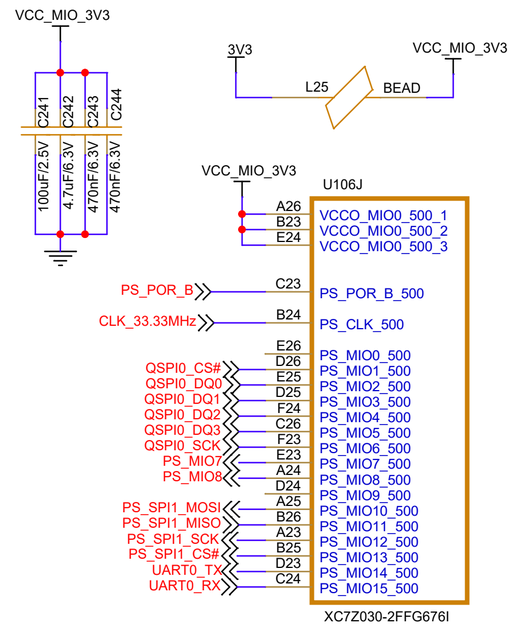

DRN BY	<DRN BY>	EXPLORER ELECTRONICS, 43/A, GOBINDA BASU LANE, HALISAHAR, KOLKATA, 743134, WEST BENGAL, INDIA.
CHKD BY	<CHKD BY>	Title: INTEGRATED DATA ACQUISITION BOARD
APPD BY	<APPD BY>	Size: A3 — Document Number: NVSRAM_QSPI_MOI500_BOOT — Rev: ?
PROPRIETARY INFORMATION. NO DISSEMINATION OR USE ALLOWED WITHOUT PRIOR WRITTEN PERMISSION.		Date: Saturday, October 04, 2025 — Sheet 11 of 27

+5V GENERATION

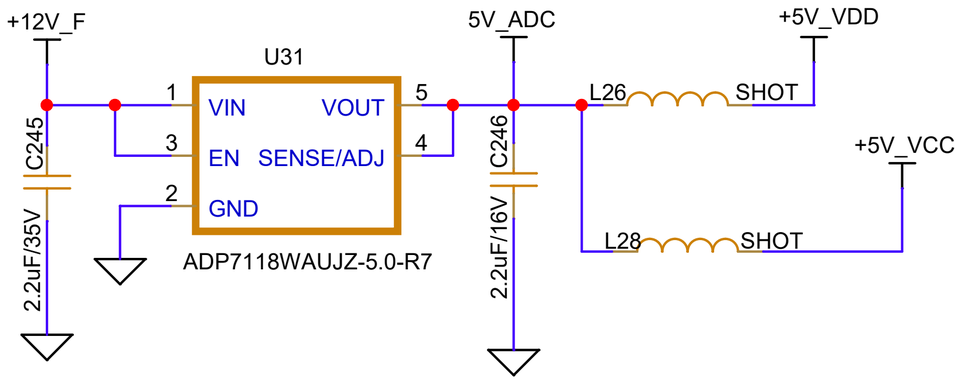

-5V GENERATION

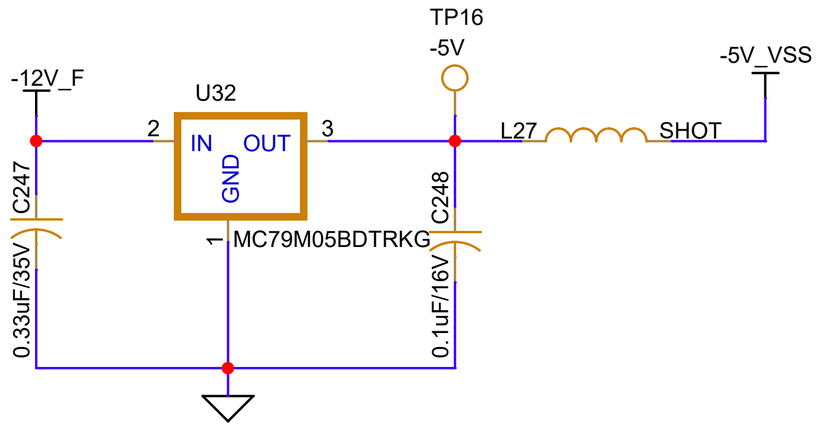

10V GENERATION

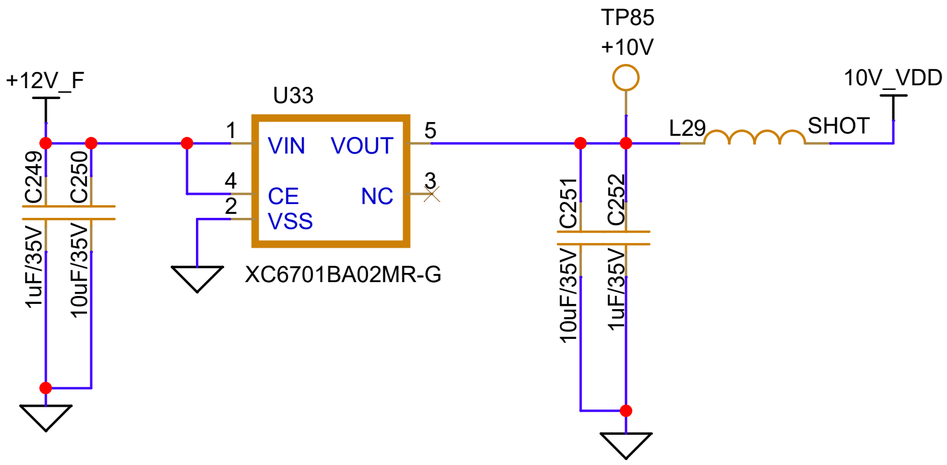

-10V GENERATION

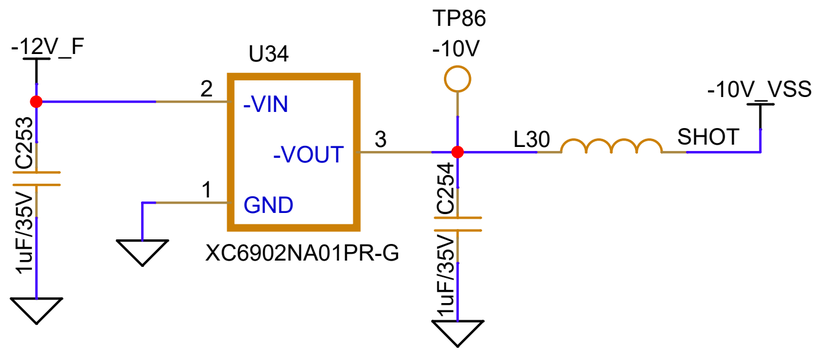

DRN BY	*<DRN BY>*
CHKD BY	*<CHKD BY>*
APPD BY	*<APPD BY>*

PROPRIETARY INFORMATION

NO DISSEMINATION OR USE ALLOWED WITHOUT PRIOR WRITTEN PERMISSION.

EXPLORER ELECTRONICS

43/A, GOBINDA BASU LANE, HALISAHAR, KOLKATA, 743134, WEST BENGAL, INDIA.

Title: INTEGRATED DATA ACQUISITION BOARD

Size	Document Number	Rev
A	ADC_PWR	?

Date: Saturday, October 04, 2025 Sheet 12 of 27

AD7384-4BCPZ-ADC1

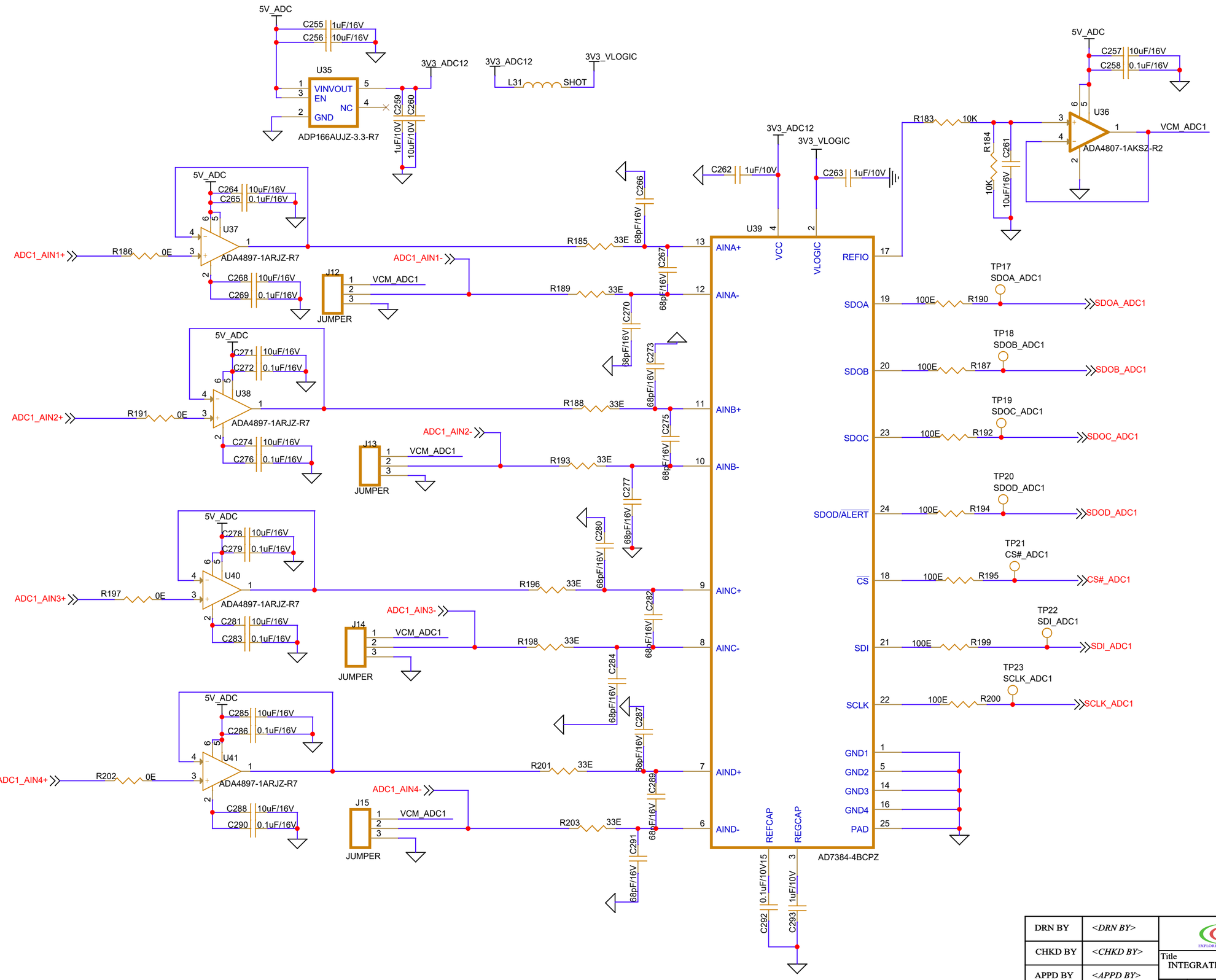

DRN BY	<DRN BY>	EXPLORER ELECTRONICS 43/A, GOBINDA BASU LANE, HALISAHAR, KOLKATA, 743134, WEST BENGAL, INDIA.
CHKD BY	<CHKD BY>	Title: INTEGRATED DATA ACQUISITION BOARD
APPD BY	<APPD BY>	Size: A3 — Document Number: ADC1 — Rev: ?
PROPRIETARY INFORMATION NO DISSEMINATION OR USE ALLOWED WITHOUT PRIOR WRITTEN PERMISSION.		Date: Saturday, October 04, 2025 — Sheet 13 of 27

AD7384-4BCPZ-ADC2

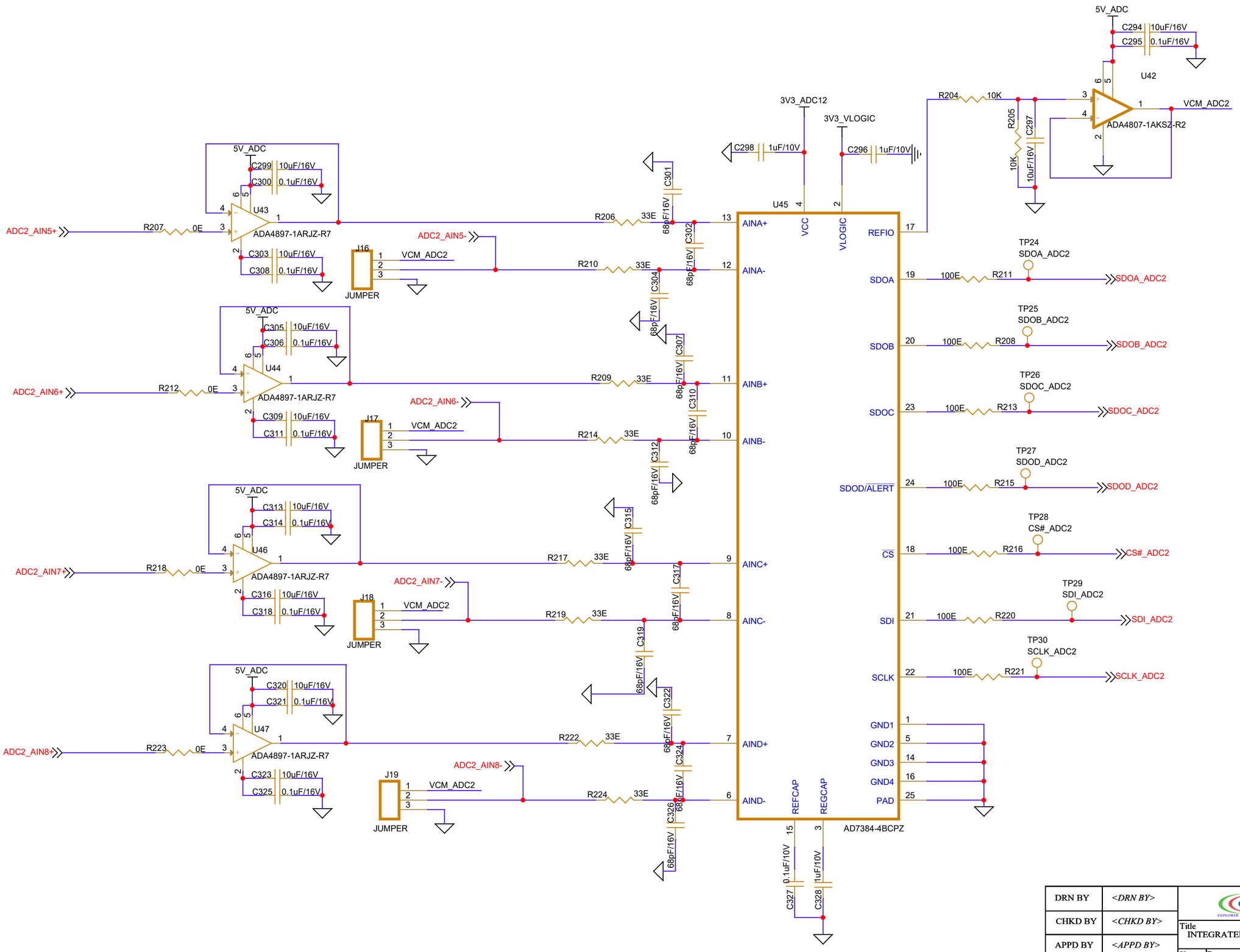

DRN BY	<DRN BY>	EXPLORER ELECTRONICS 43/A, GOBINDA BASU LANE, HALISAHAR, KOLKATA, 743134, WEST BENGAL, INDIA.
CHKD BY	<CHKD BY>	Title: INTEGRATED DATA ACQUISITION BOARD
APPD BY	<APPD BY>	Size: A3 · Document Number: ADC2 · Rev: ?
PROPRIETARY INFORMATION — NO DISSEMINATION OR USE ALLOWED WITHOUT PRIOR WRITTEN PERMISSION.		Date: Saturday, October 04, 2025 · Sheet 14 of 27

AD7328BRUZ-ADC3 (SINGLE ENDED WITH INPUT BUFFER)

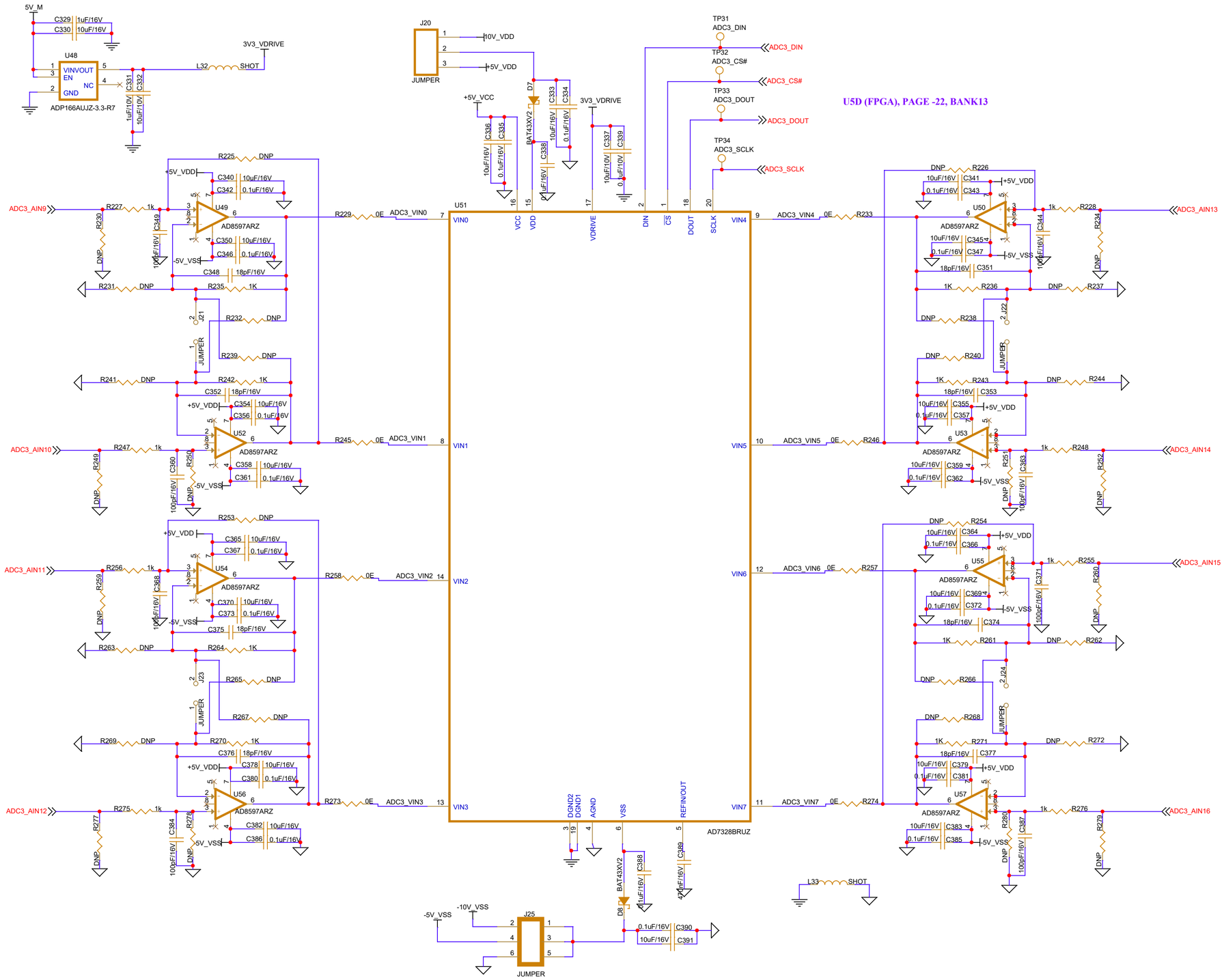

U5D (FPGA), PAGE -22, BANK13

DRN BY	<DRN BY>	EXPLORER ELECTRONICS 43/A, GOBINDA BASU LANE, HALISAHAR, KOLKATA, 743134, WEST BENGAL, INDIA.
CHKD BY	<CHKD BY>	Title: INTEGRATED DATA ACQUISITION BOARD
APPD BY	<APPD BY>	Size: A2 · Document Number: ADC3 · Rev: ?
PROPRIETARY INFORMATION NO DISSEMINATION OR USE ALLOWED WITHOUT PRIOR WRITTEN PERMISSION.		Date: Saturday, October 04, 2025 · Sheet 15 of 27

AD7328BRUZ-ADC4 (SINGLE ENDED WITH INPUT BUFFER)

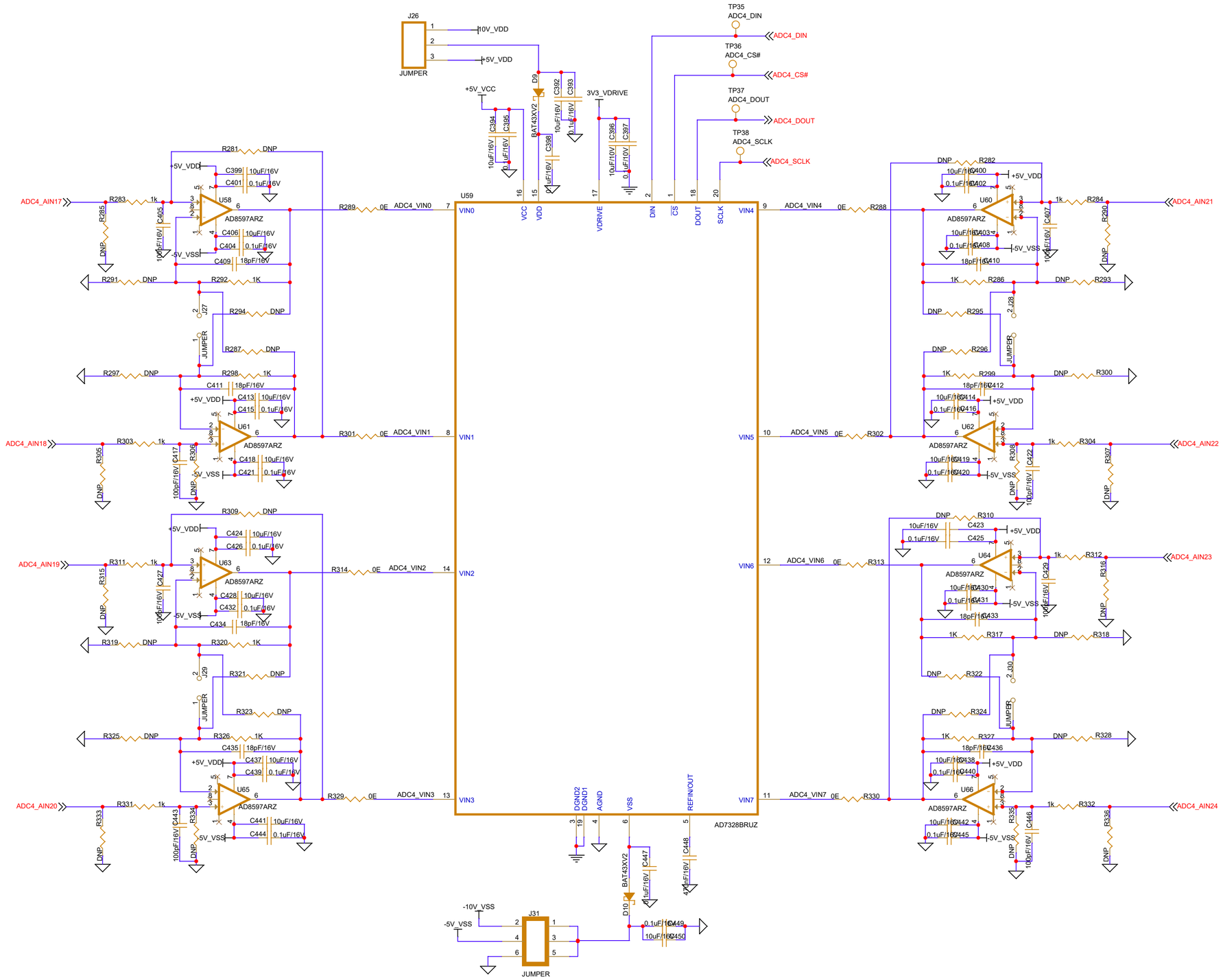

DRN BY	<DRN BY>	EXPLORER ELECTRONICS 43/A, GOBINDA BASU LANE, HALISAHAR, KOLKATA, 743134, WEST BENGAL, INDIA.	
CHKD BY	<CHKD BY>	Title INTEGRATED DATA ACQUISITION BOARD	
APPD BY	<APPD BY>	Size A2	Document Number ADC4	Rev 7
PROPRIETARY INFORMATION NO DISSEMINATION OR USE ALLOWED WITHOUT PRIOR WRITTEN PERMISSION.		Date: Saturday, October 04, 2025	Sheet 16 of 27

AD7328BRUZ-ADC5 (SINGLE ENDED WITH INPUT BUFFER)

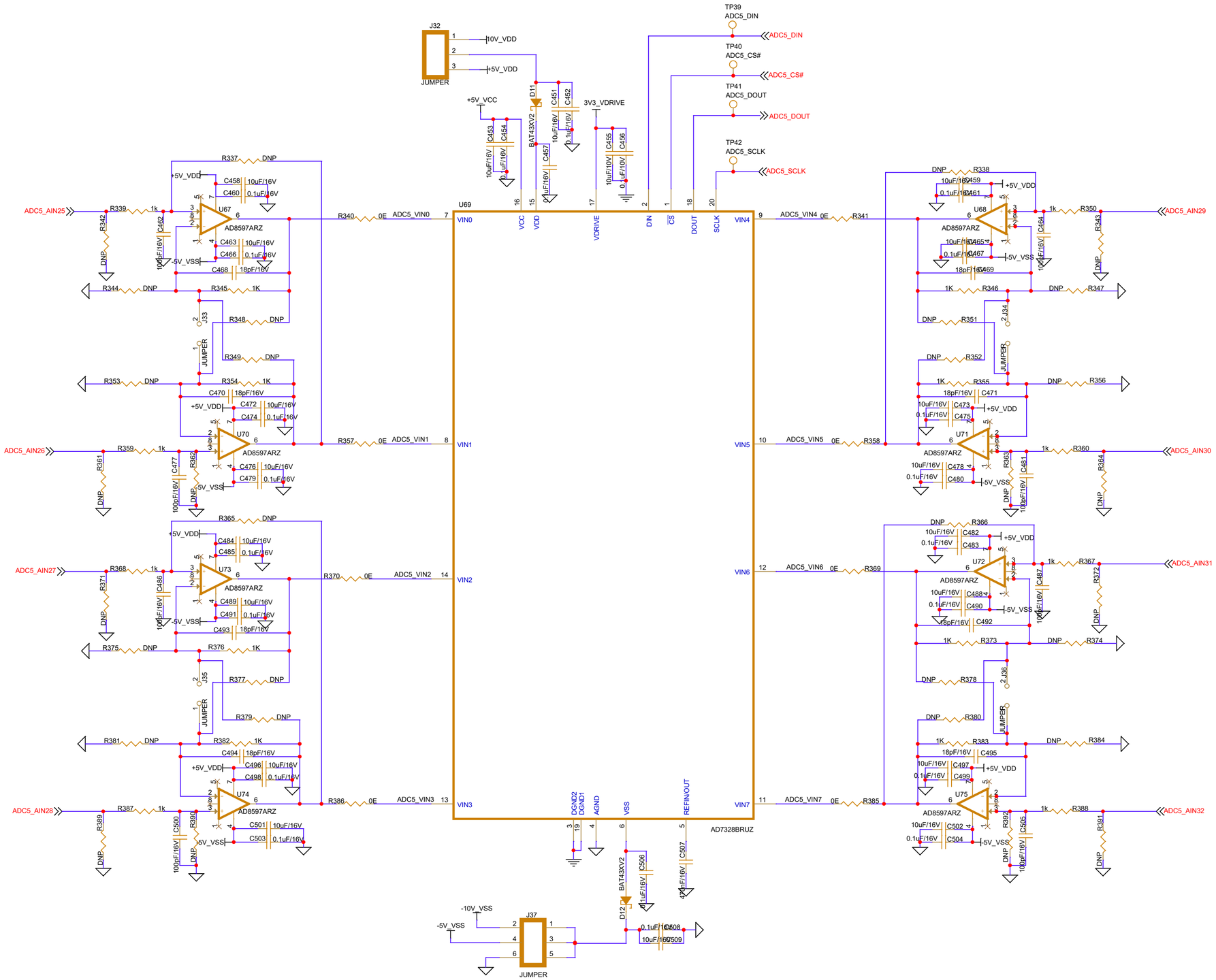

DRN BY	<DRN BY>	EXPLORER ELECTRONICS 43/A, GOBINDA BASU LANE, HALISAHAR, KOLKATA, 743134, WEST BENGAL, INDIA.
CHKD BY	<CHKD BY>	Title: INTEGRATED DATA ACQUISITION BOARD
APPD BY	<APPD BY>	Size: A2 · Document Number: ADC5 · Rev: ?
PROPRIETARY INFORMATION NO DISSEMINATION OR USE ALLOWED WITHOUT PRIOR WRITTEN PERMISSION.		Date: Saturday, October 04, 2025 · Sheet 17 of 27

AD3542RBCPZ16-DAC1

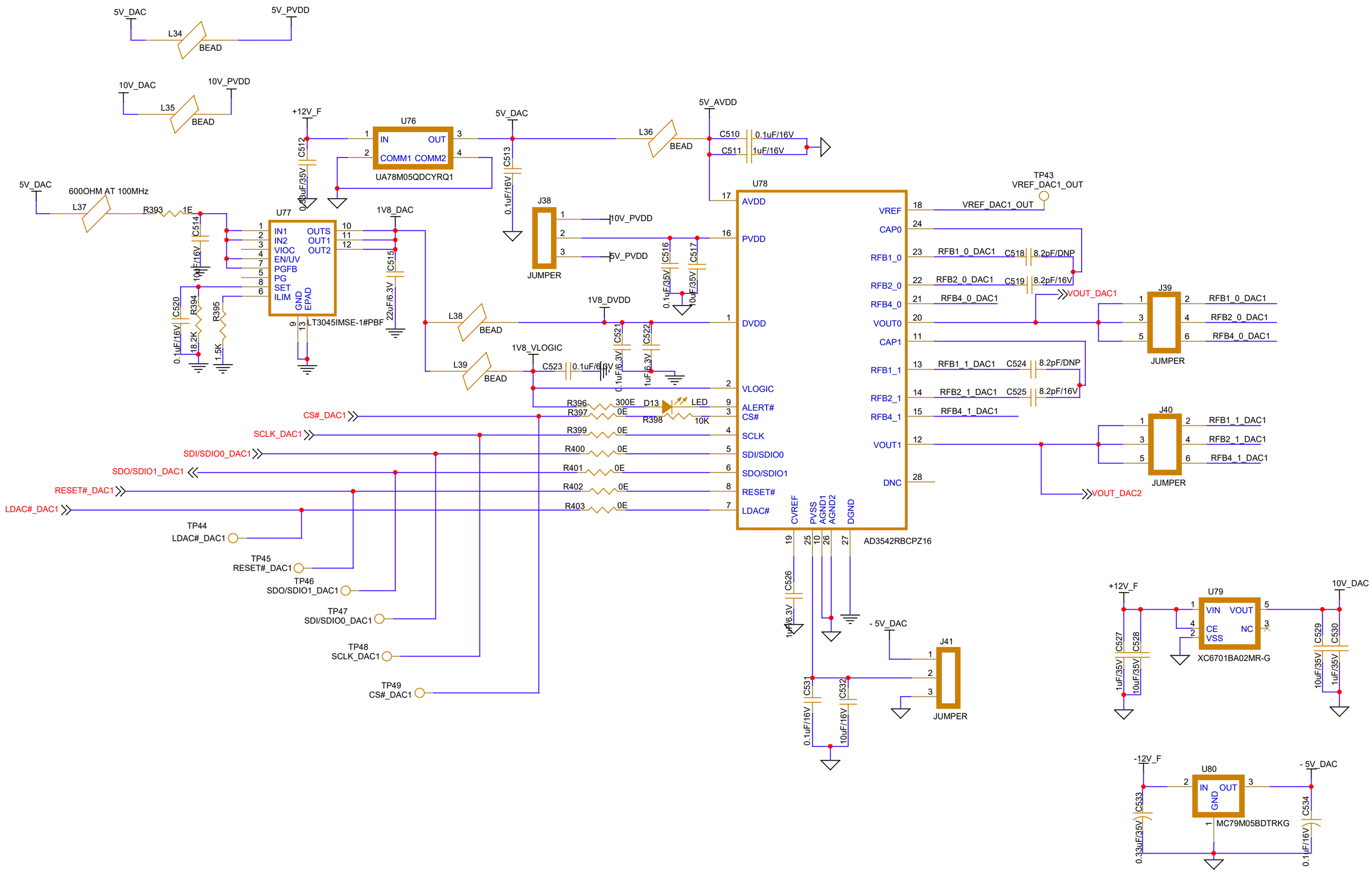

DRN BY	<DRN BY>	EXPLORER ELECTRONICS 43/A, GOBINDA BASU LANE, HALISAHAR, KOLKATA, 743134, WEST BENGAL, INDIA.
CHKD BY	<CHKD BY>	Title: INTEGRATED DATA ACQUISITION BOARD
APPD BY	<APPD BY>	Size: A3 · Document Number: DAC1 · Rev: ?
PROPRIETARY INFORMATION NO DISSEMINATION OR USE ALLOWED WITHOUT PRIOR WRITTEN PERMISSION.		Date: Saturday, October 04, 2025 · Sheet 18 of 27

AD3542RBCPZ16-DAC2

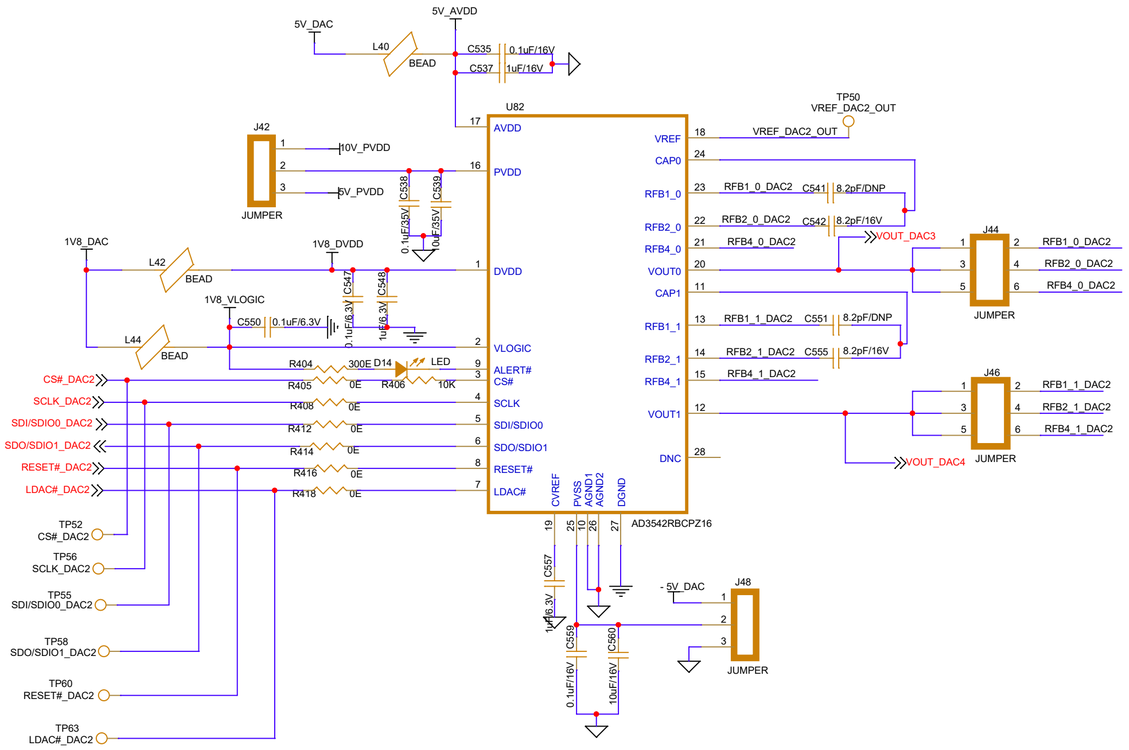

AD3542RBCPZ16-DAC3

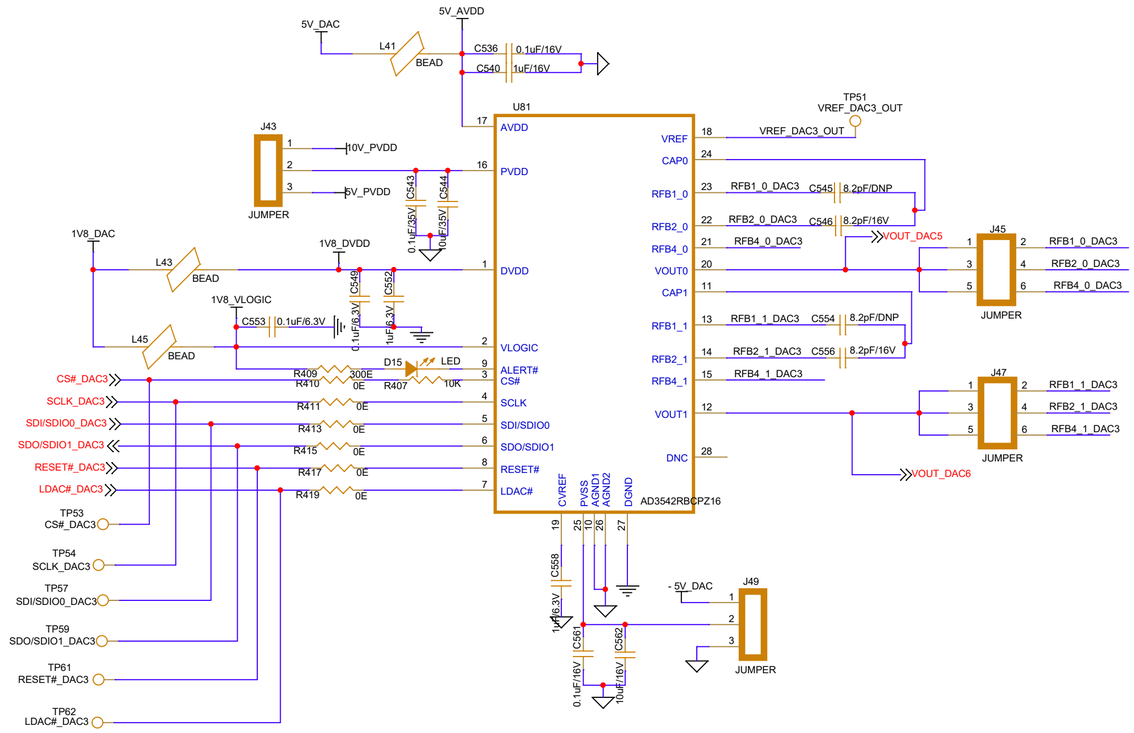

AD3542RBCPZ16-DAC4

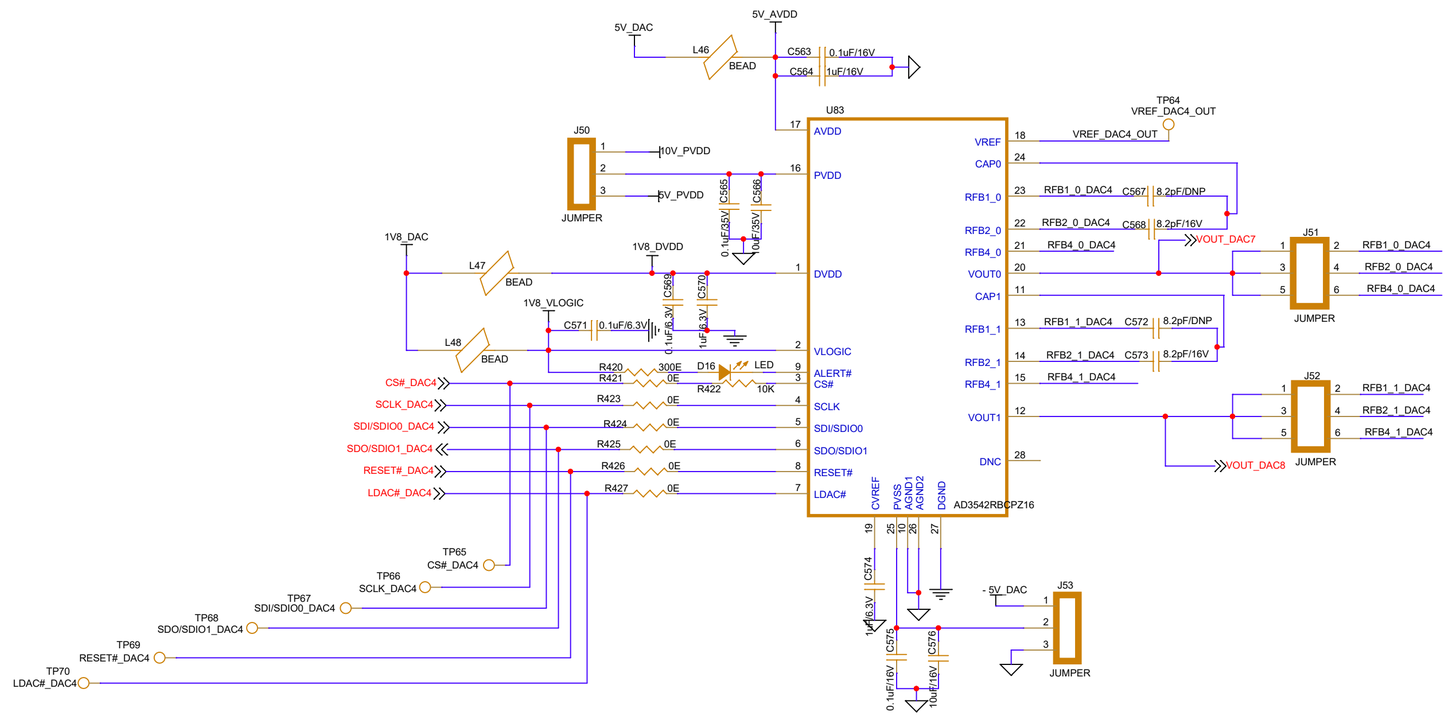

DRN BY	<DRN BY>	EXPLORER ELECTRONICS 43/A, GOBINDA BASU LANE, HALISAHAR, KOLKATA, 743134, WEST BENGAL, INDIA.
CHKD BY	<CHKD BY>	Title: INTEGRATED DATA ACQUISITION BOARD
APPD BY	<APPD BY>	
PROPRIETARY INFORMATION — NO DISSEMINATION OR USE ALLOWED WITHOUT PRIOR WRITTEN PERMISSION.		Size: A2 · Document Number: DAC2_3_4 · Rev: 7
		Date: Saturday, October 04, 2025 · Sheet 19 of 27

PL PMOD 1

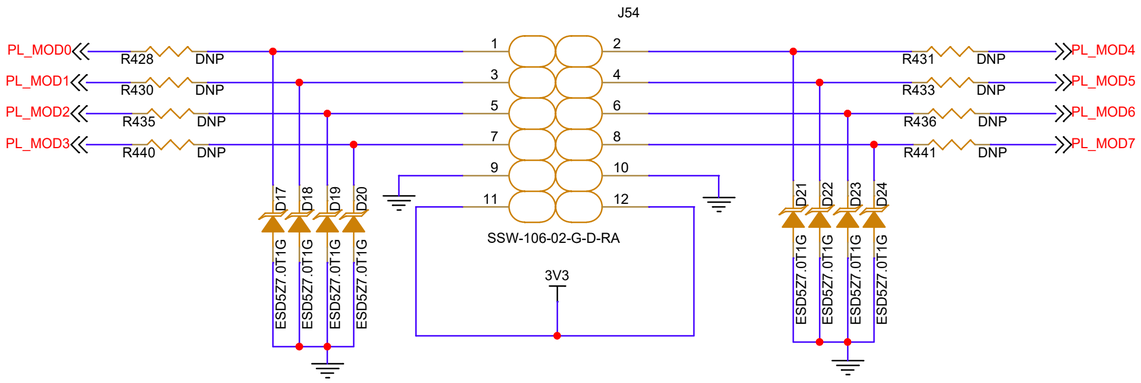

PL PMOD 2

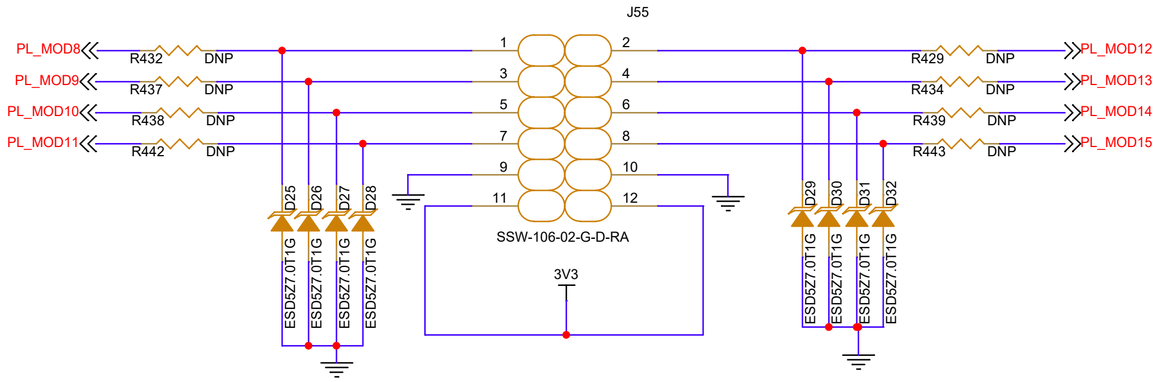

QUAD CH DIGITAL (COUNTER)

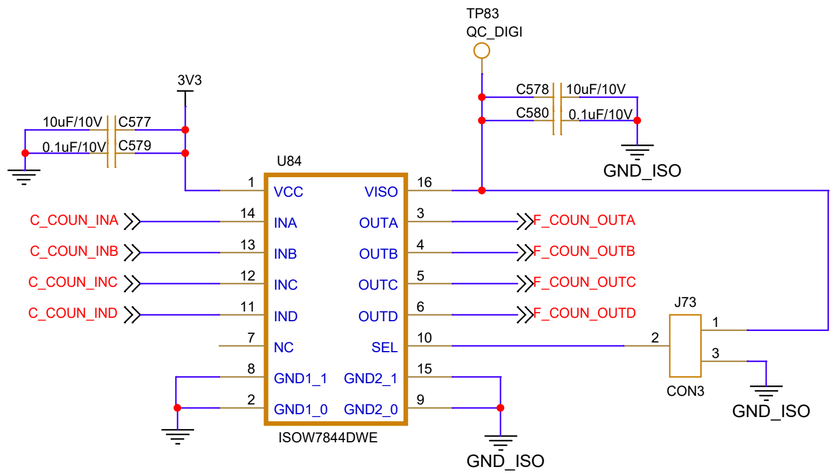

DRN BY	<DRN BY>	EXPLORER ELECTRONICS 43/A, GOBINDA BASU LANE, HALISAHAR, KOLKATA, 743134, WEST BENGAL, INDIA.
CHKD BY	<CHKD BY>	Title INTEGRATED DATA ACQUISITION BOARD
APPD BY	<APPD BY>	Size A3 · Document Number PL_MOD & QUARD CH DIGITAL (COUNTER) · Rev ?
PROPRIETARY INFORMATION NO DISSEMINATION OR USE ALLOWED WITHOUT PRIOR WRITTEN PERMISSION.		Date: Saturday, October 04, 2025 · Sheet 20 of 27

RS - 422 (DIFFERTENTIAL DIGITAL IN&OUT)

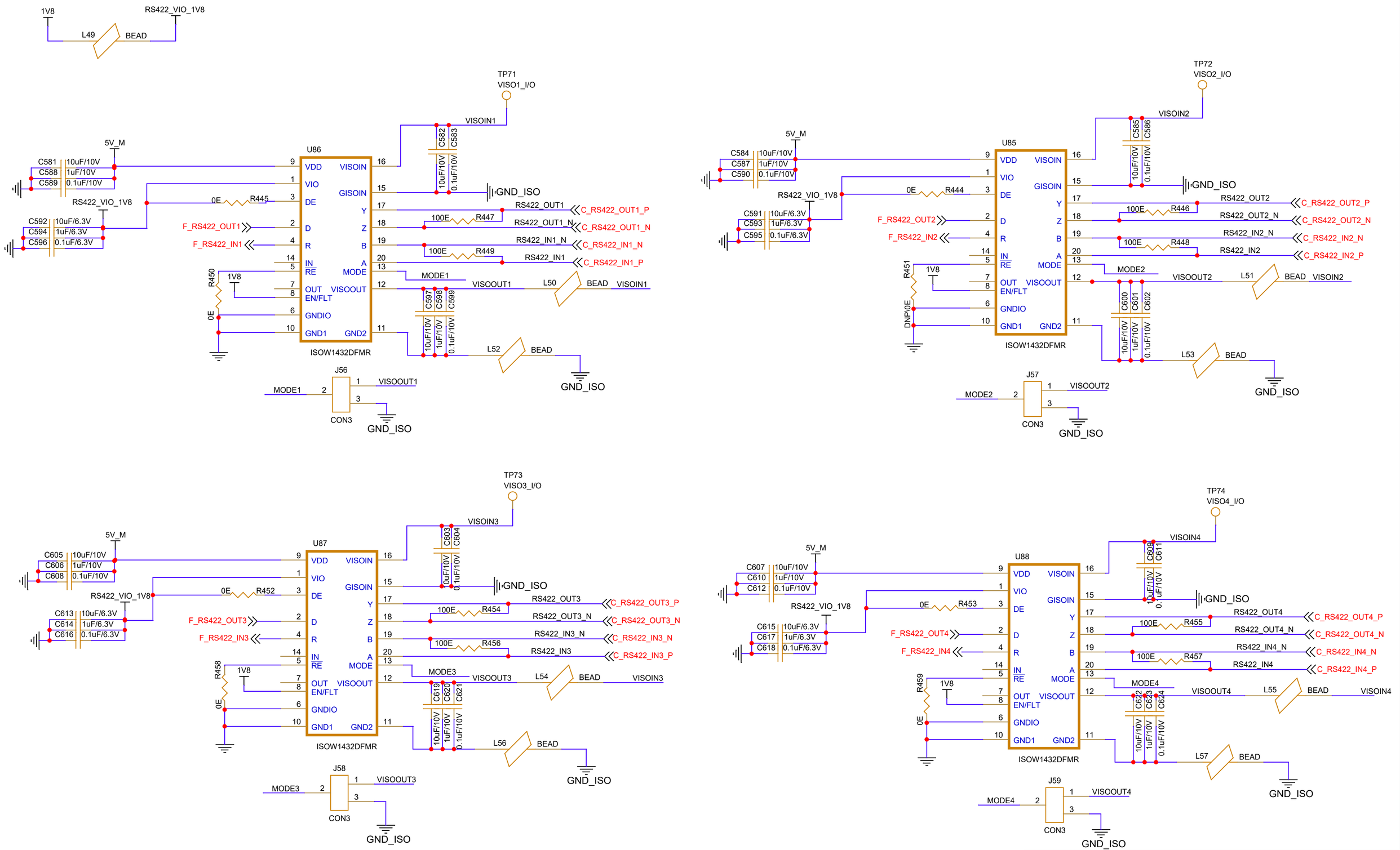

DRN BY	<DRN BY>	EXPLORER ELECTRONICS 43/A, GOBINDA BASU LANE, HALISAHAR, KOLKATA, 743134, WEST BENGAL, INDIA.
CHKD BY	<CHKD BY>	Title: INTEGRATED DATA ACQUISITION BOARD
APPD BY	<APPD BY>	Size: A3 — Document Number: ISOW1432DFMR - RS-422 DIGITAL IN&OUT) — Rev: ?
PROPRIETARY INFORMATION — NO DISSEMINATION OR USE ALLOWED WITHOUT PRIOR WRITTEN PERMISSION.		Date: Saturday, October 04, 2025 — Sheet 21 of 27

ISO DIGITAL INPUT

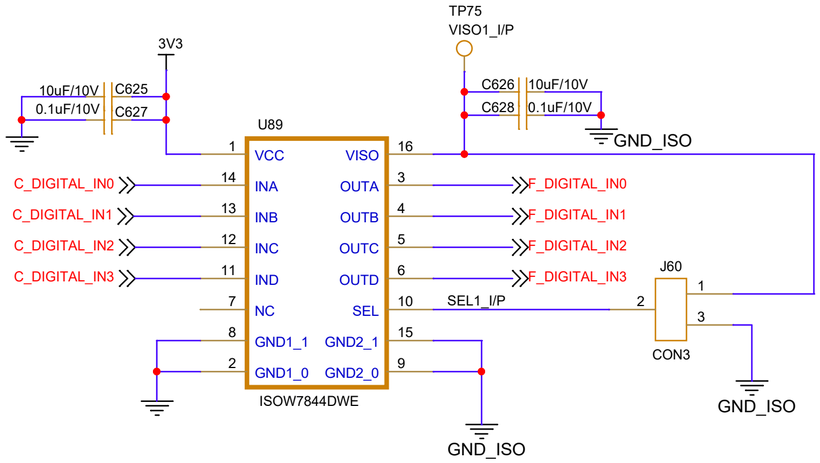

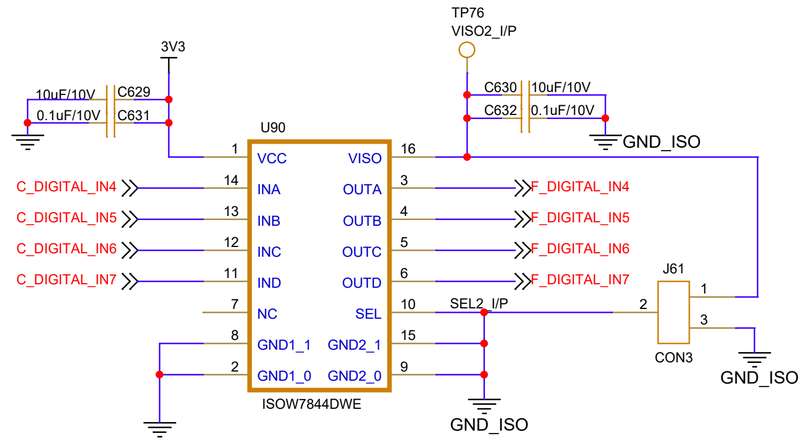

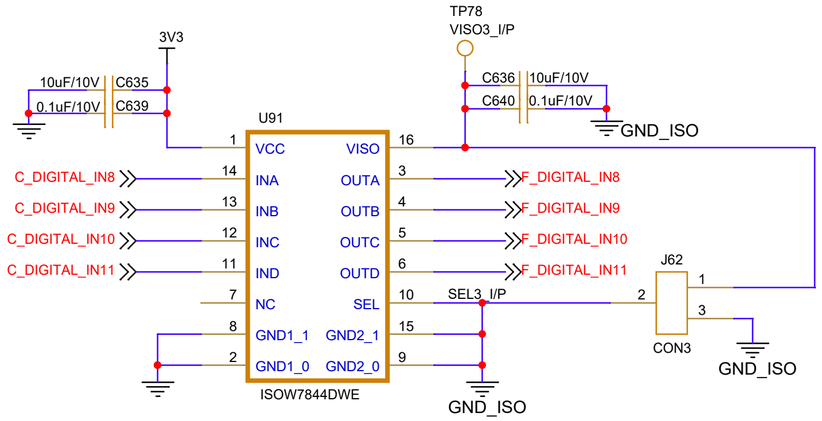

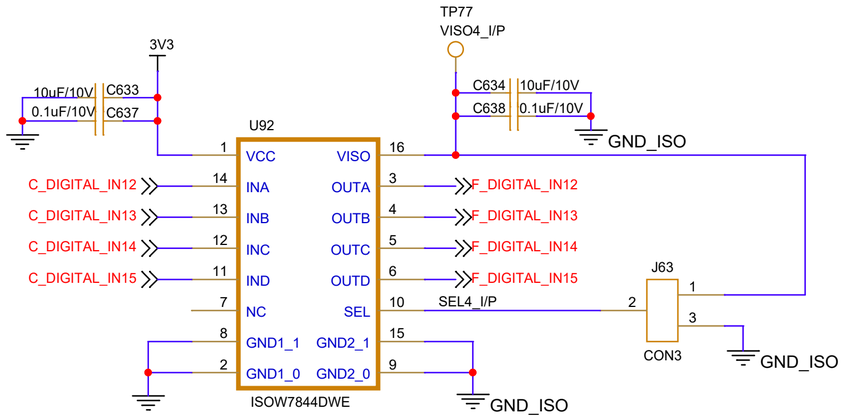

DRN BY	<DRN BY>	EXPLORER ELECTRONICS 43/A, GOBINDA BASU LANE, HALISAHAR, KOLKATA, 743134, WEST BENGAL, INDIA.
CHKD BY	<CHKD BY>	Title: INTEGRATED DATA ACQUISITION BOARD
APPD BY	<APPD BY>	Size: A3 — Document Number: ISO DIGITAL INPUT — Rev: ?
PROPRIETARY INFORMATION. NO DISSEMINATION OR USE ALLOWED WITHOUT PRIOR WRITTEN PERMISSION.		Date: Saturday, October 04, 2025 — Sheet 22 of 27

ISO DIGITAL OUT

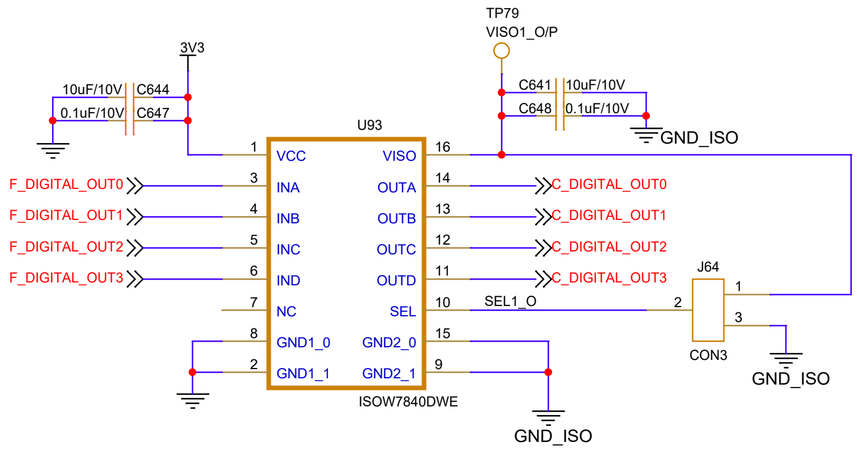

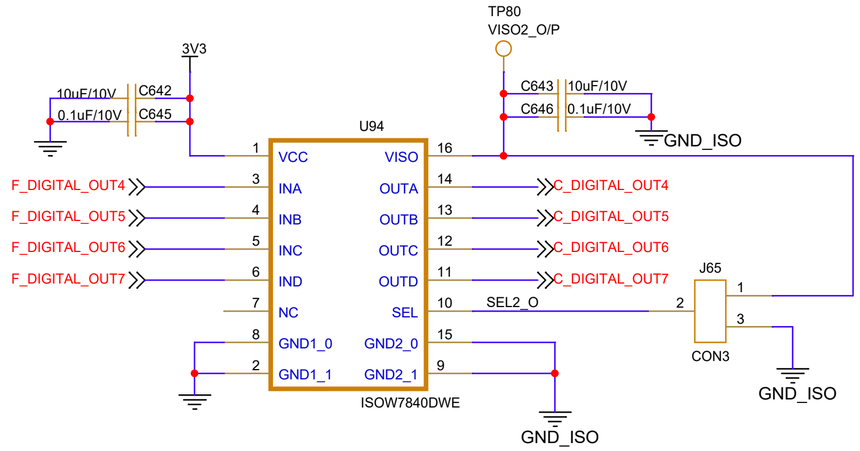

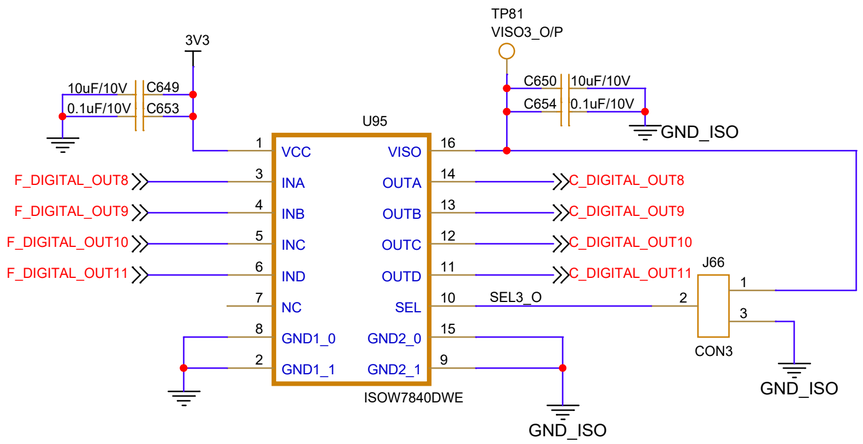

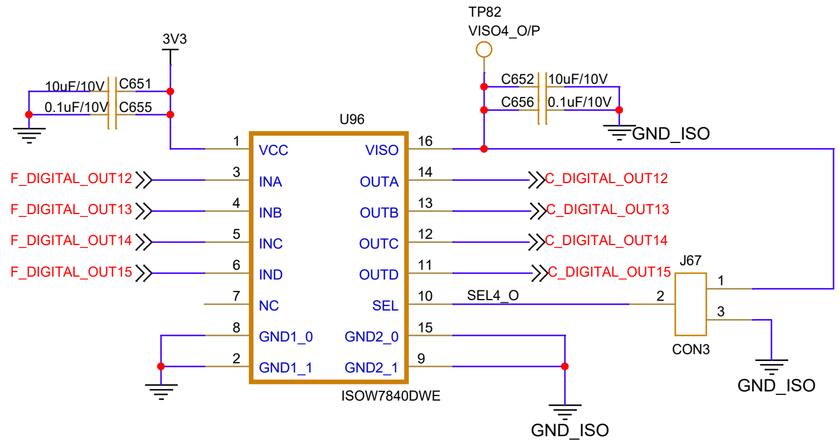

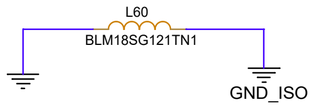

DRN BY	<DRN BY>	EXPLORER ELECTRONICS 43/A, GOBINDA BASU LANE, HALISAHAR, KOLKATA, 743134, WEST BENGAL, INDIA.
CHKD BY	<CHKD BY>	Title INTEGRATED DATA ACQUISITION BOARD
APPD BY	<APPD BY>	Size A3 · Document Number ISO DIGITAL OUT · Rev ?
PROPRIETARY INFORMATION NO DISSEMINATION OR USE ALLOWED WITHOUT PRIOR WRITTEN PERMISSION.		Date: Saturday, October 04, 2025 · Sheet 23 of 27

GPIO LEDS

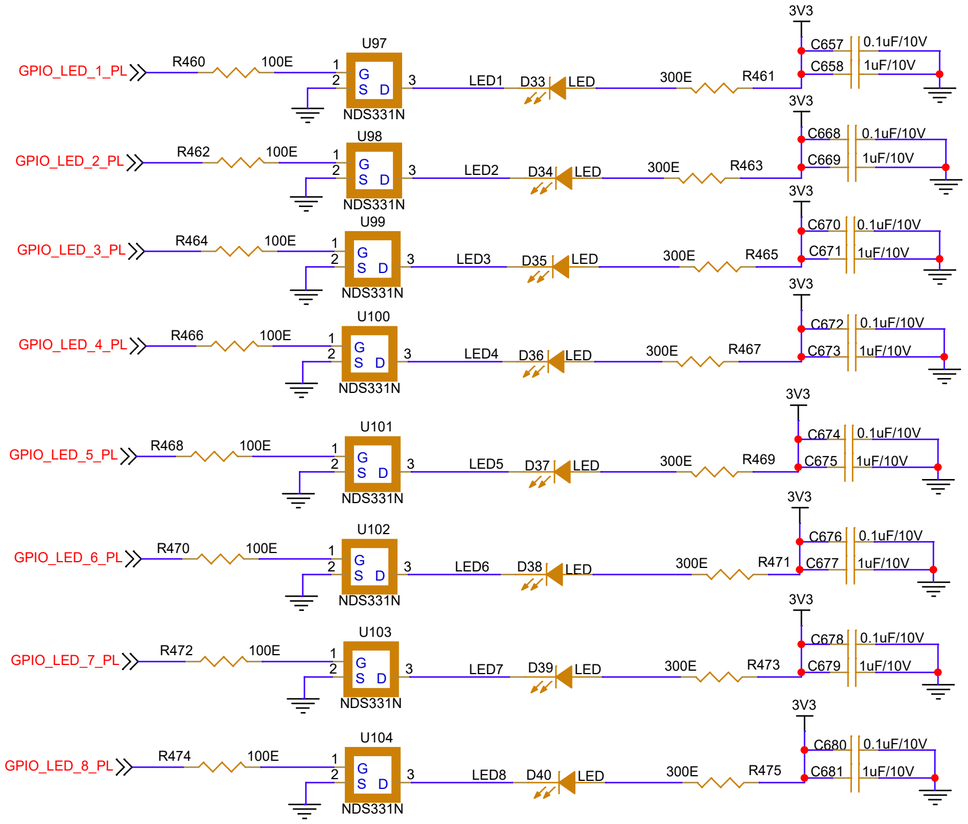

BANK-35

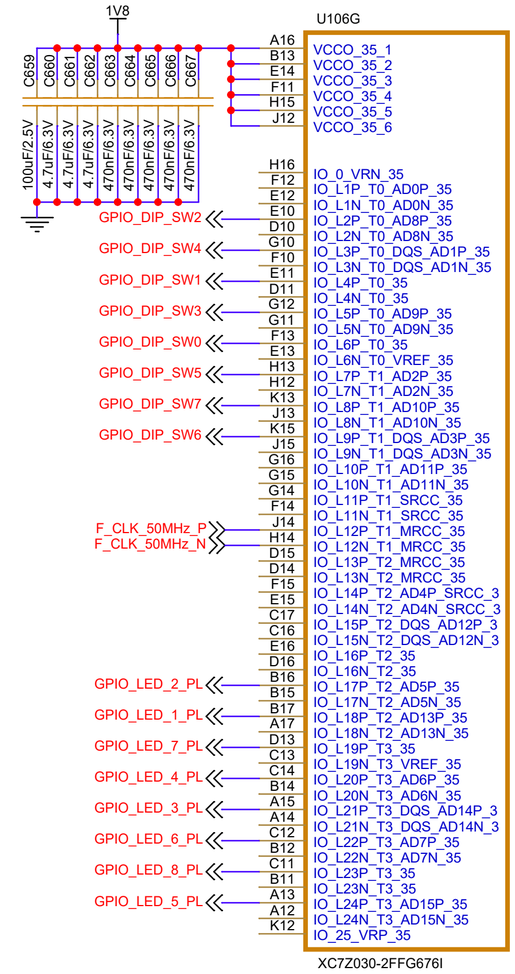

DIP SWITCH

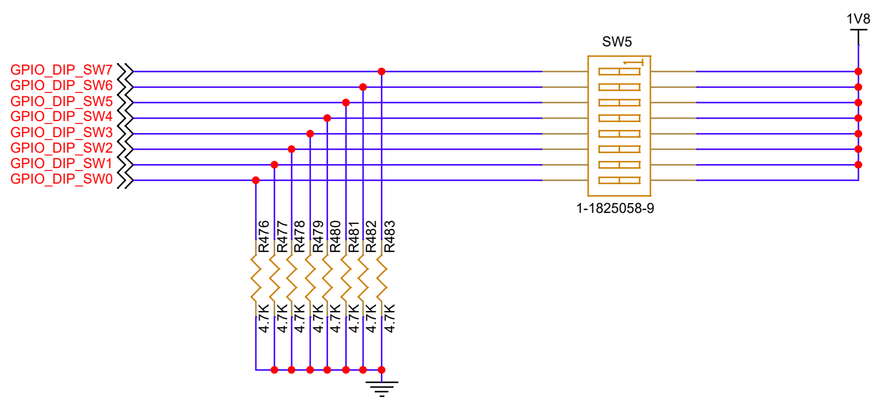

PL 50MHz CLOCK

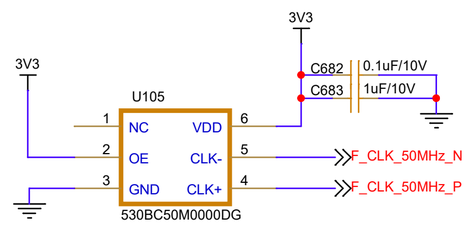

DRN BY	*<DRN BY>*	EXPLORER ELECTRONICS 43/A, GOBINDA BASU LANE, HALISAHAR, KOLKATA, 743134, WEST BENGAL, INDIA.
CHKD BY	*<CHKD BY>*	Title: INTEGRATED DATA ACQUISITION BOARD
APPD BY	*<APPD BY>*	Size: A3 — Document Number: GPIO_LED_CLOCK & BANK 35 — Rev: ?
PROPRIETARY INFORMATION *NO DISSEMINATION OR USE ALLOWED WITHOUT PRIOR WRITTEN PERMISSION.*		Date: Saturday, October 04, 2025 — Sheet 24 of 27

BANK-13

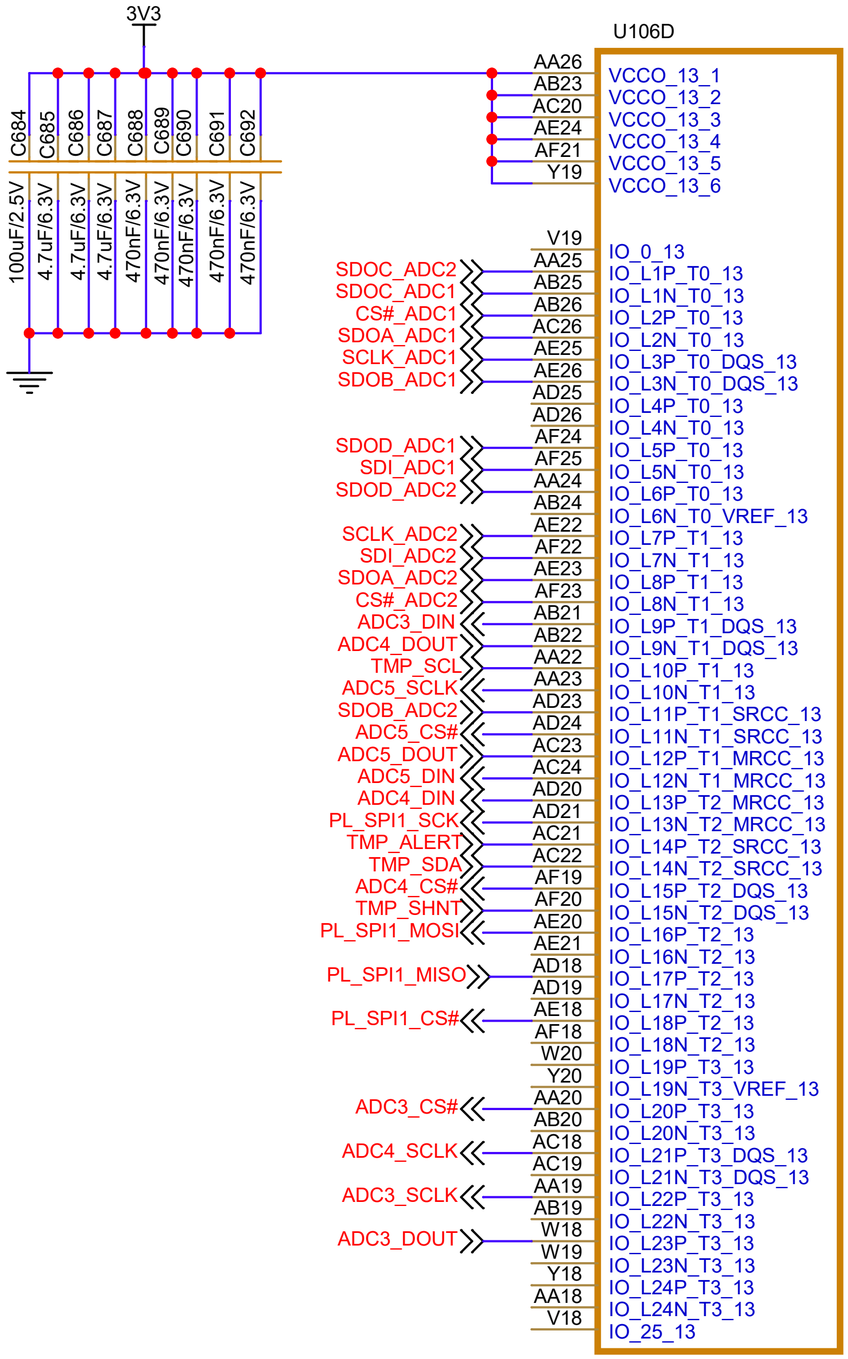

BANK-12

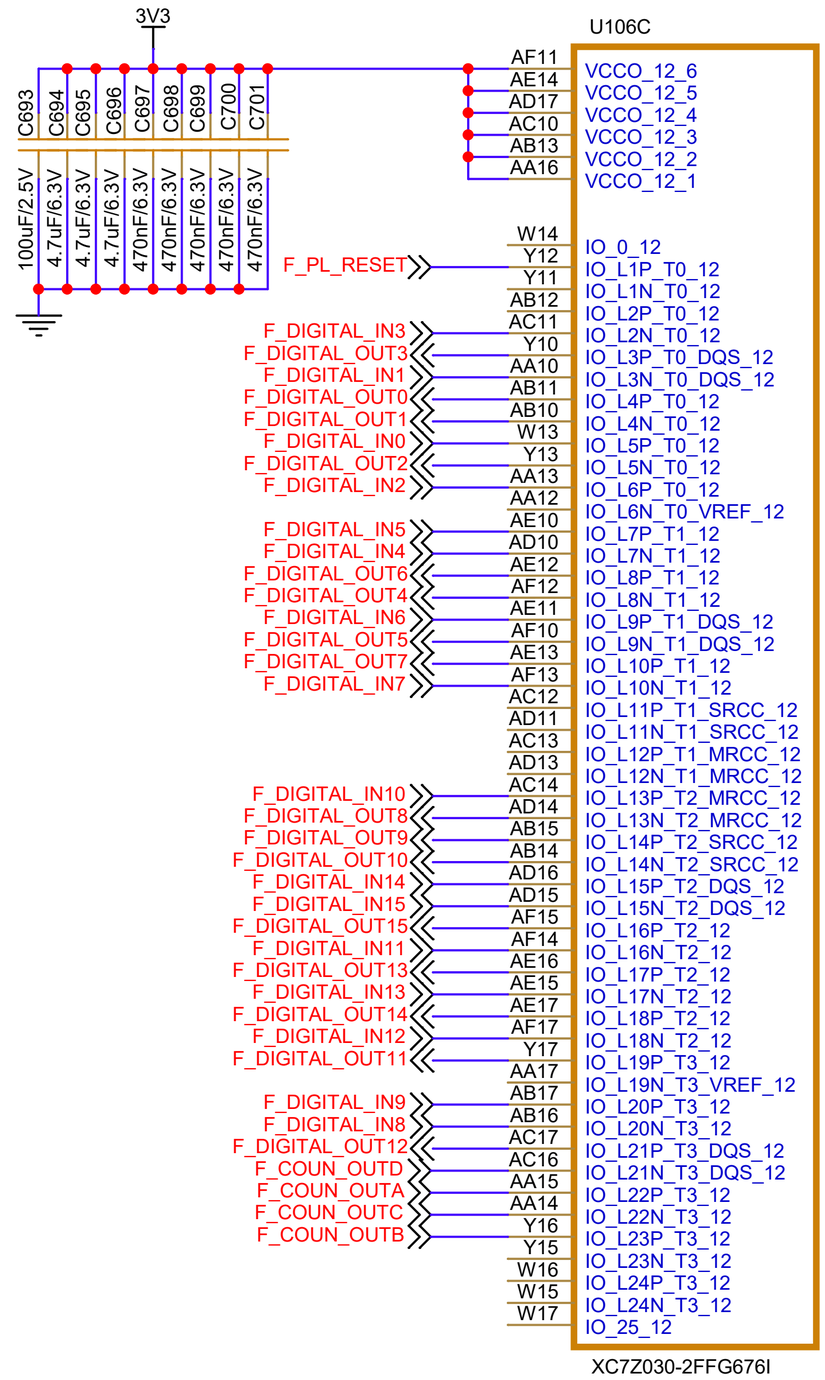

DRN BY	*<DRN BY>*	EXPLORER ELECTRONICS 43/A, GOBINDA BASU LANE, HALISAHAR, KOLKATA, 743134, WEST BENGAL, INDIA.
CHKD BY	*<CHKD BY>*	Title INTEGRATED DATA ACQUISITION BOARD
APPD BY	*<APPD BY>*	Size A4 · Document Number BANK_12 & 13 · Rev ?
PROPRIETARY INFORMATION *NO DISSEMINATION OR USE ALLOWED WITHOUT PRIOR WRITTEN PERMISSION.*		Date: Saturday, October 04, 2025 · Sheet 25 of 27

BANK-33

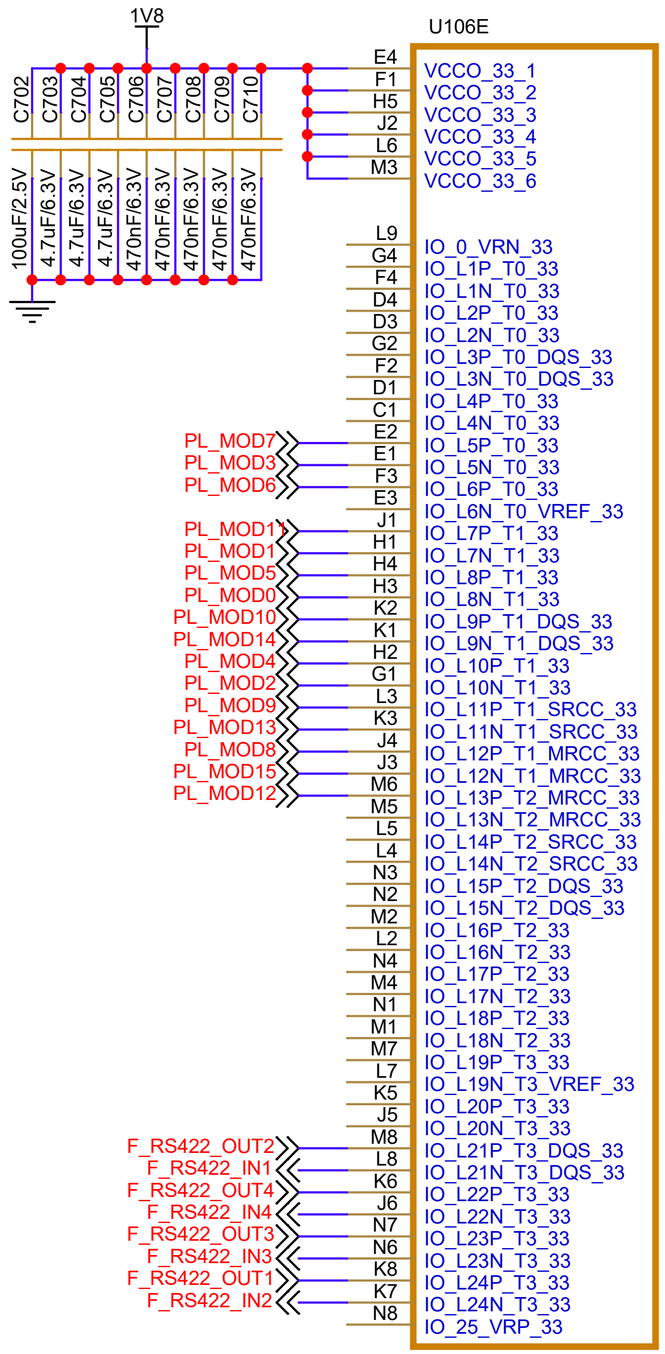

BANK-34

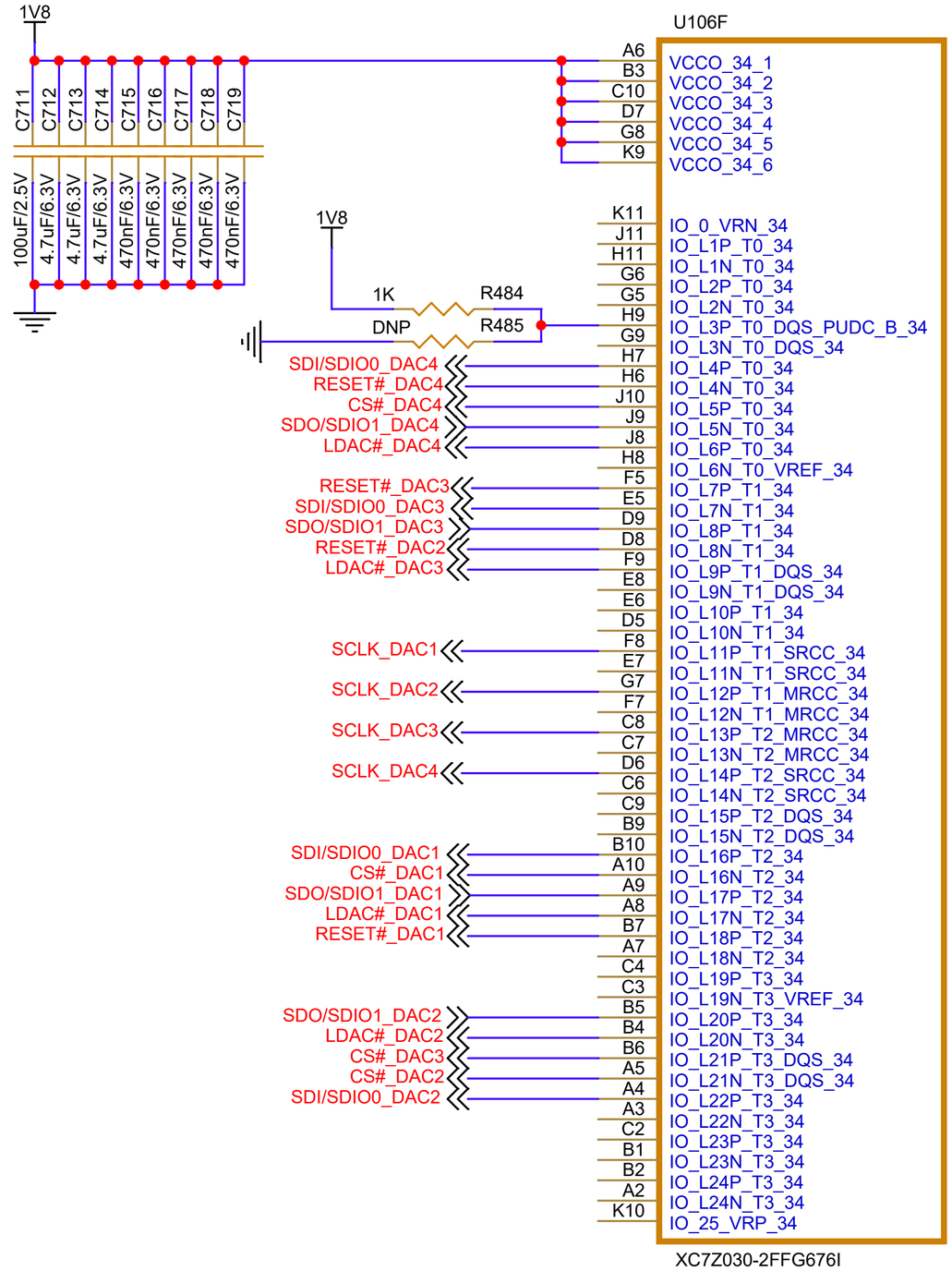

DRN BY	*<DRN BY>*	EXPLORER ELECTRONICS 43/A, GOBINDA BASU LANE, HALISAHAR, KOLKATA, 743134, WEST BENGAL, INDIA.
CHKD BY	*<CHKD BY>*	Title INTEGRATED DATA ACQUISITION BOARD
APPD BY	*<APPD BY>*	Size A4 · Document Number BANK_33 & 34 · Rev ?
PROPRIETARY INFORMATION *NO DISSEMINATION OR USE ALLOWED WITHOUT PRIOR WRITTEN PERMISSION.*		Date: Saturday, October 04, 2025 · Sheet 26 of 27

CONNECTORS DETAILS

ADC IN CONNECTOR

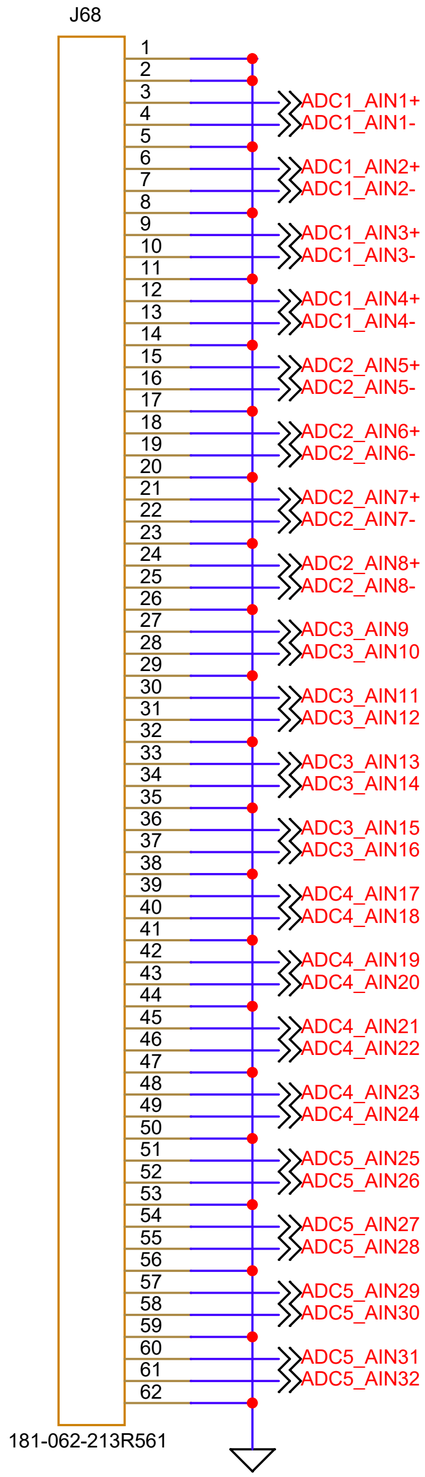

DAC OUTPUT CONNECTOR

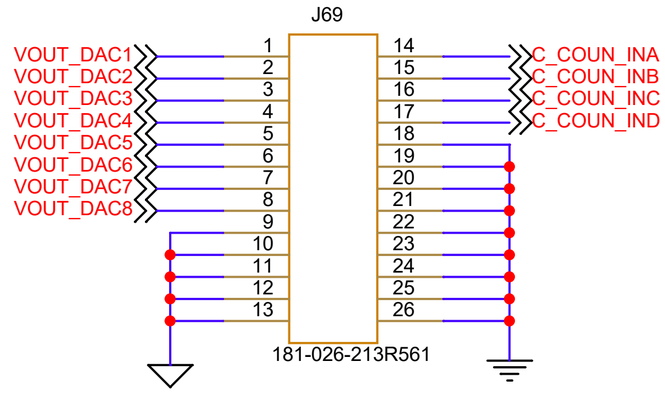

RS422 OUTPUT CONNECTOR

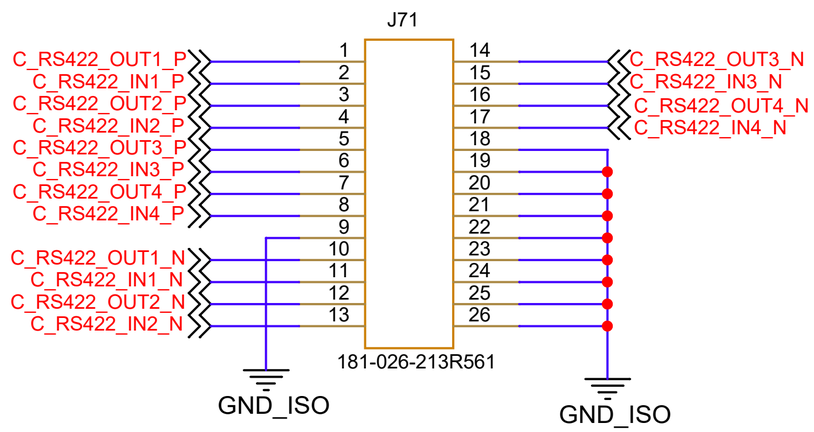

POWER SUPPLY CONNECTOR

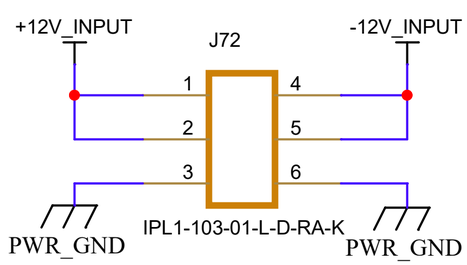

DIGITAL INPUTS AND OUTPUTS

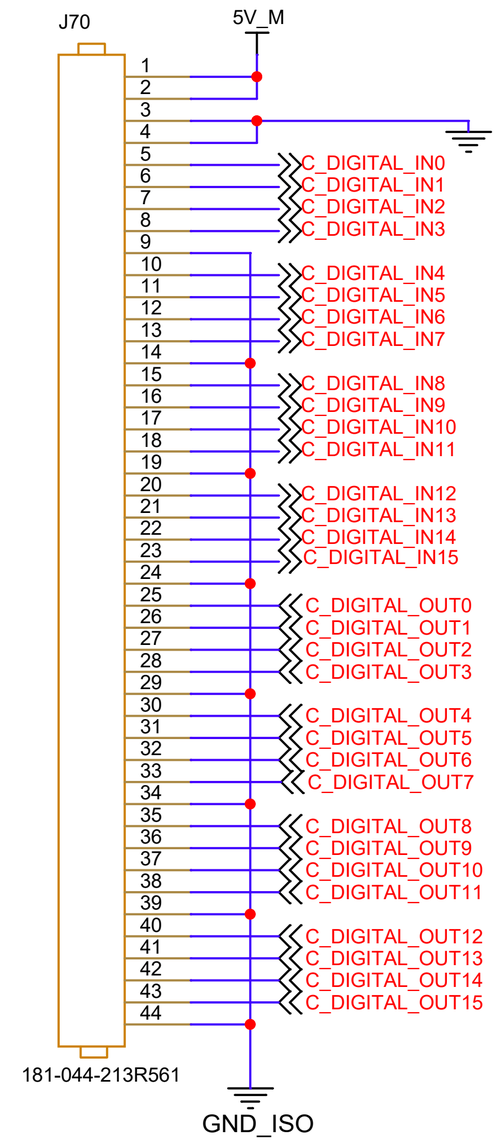

DRN BY	*<DRN BY>*
CHKD BY	*<CHKD BY>*
APPD BY	*<APPD BY>*

PROPRIETARY INFORMATION
NO DISSEMINATION OR USE ALLOWED WITHOUT PRIOR WRITTEN PERMISSION.

EXPLORER ELECTRONICS
43/A, GOBINDA BASU LANE, HALISAHAR,
KOLKATA, 743134, WEST BENGAL, INDIA.

Title: INTEGRATED DATA ACQUISITION BOARD

Size: A4 | Document Number: CONNECTORS | Rev: ?

Date: Saturday, October 04, 2025 | Sheet 27 of 27