# FPGA BLOCK DIAGRAM OF INTEGRATED DATA ACQUISITION BOARD

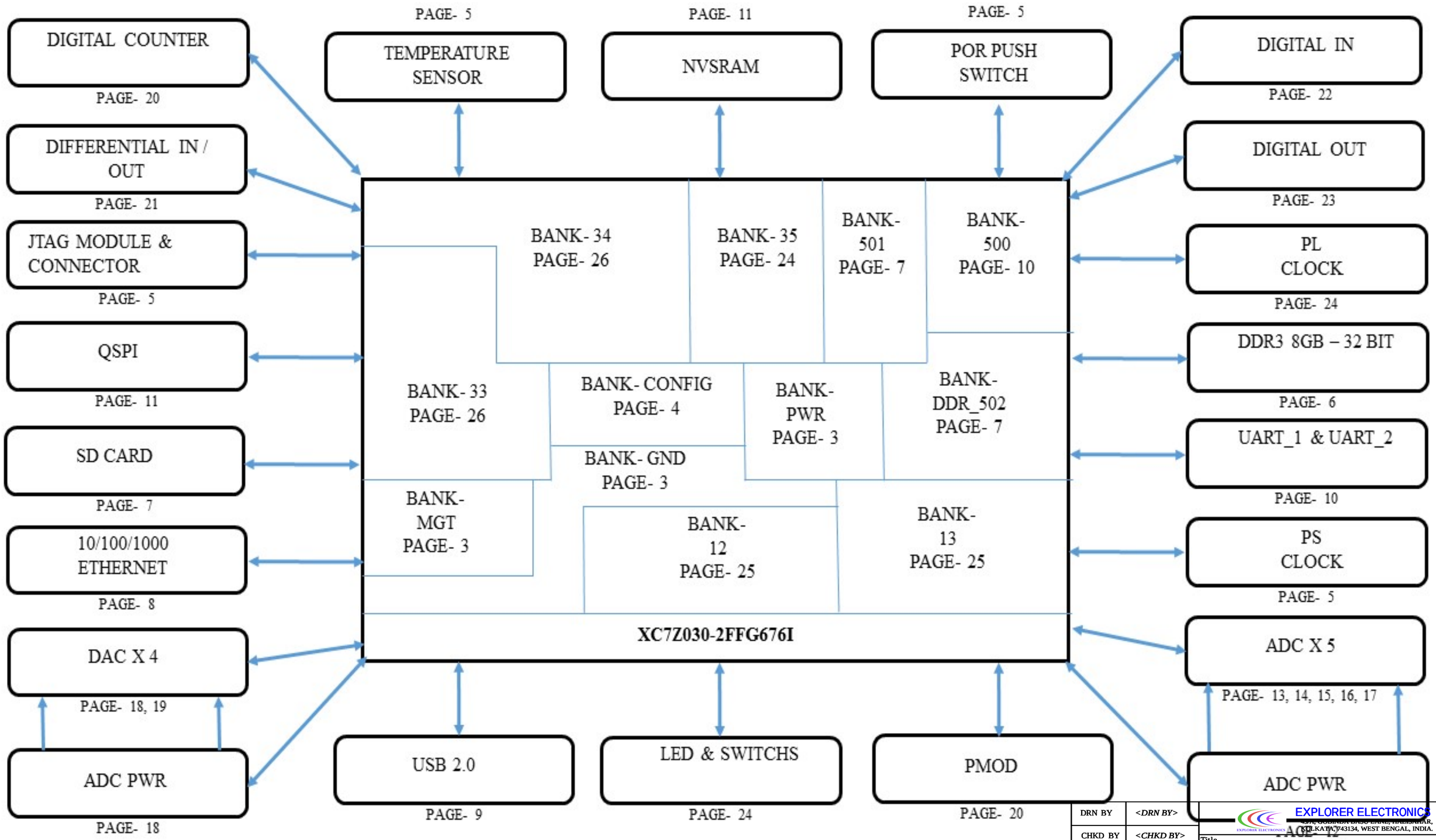


| | |
|---|---|
| DRN BY | *<DRN BY>* |
| CHKD BY | *<CHKD BY>* |
| APPD BY | *<APPD BY>* |

**PROPRIETARY INFORMATION**
*NO DISSEMINATION OR USE ALLOWED WITHOUT PRIOR WRITTEN PERMISSION.*

EXPLORER ELECTRONICS
45/1, GOBINDA BASU LANE, HALISHAHAR, KOLKATA 743134, WEST BENGAL, INDIA.

Title: INTEGRATED DATA ACQUISITION BOARD

| Size | Document Number | Rev |
|---|---|---|
| A3 | POWER BLOCK | ? |

Date: Friday, September 05, 2025 Sheet 1 of 27

# POWER SUPPLY & CONNECTORS BLOCK DIAGRAM OF INTEGRATED DATA ACQUISITION BOARD

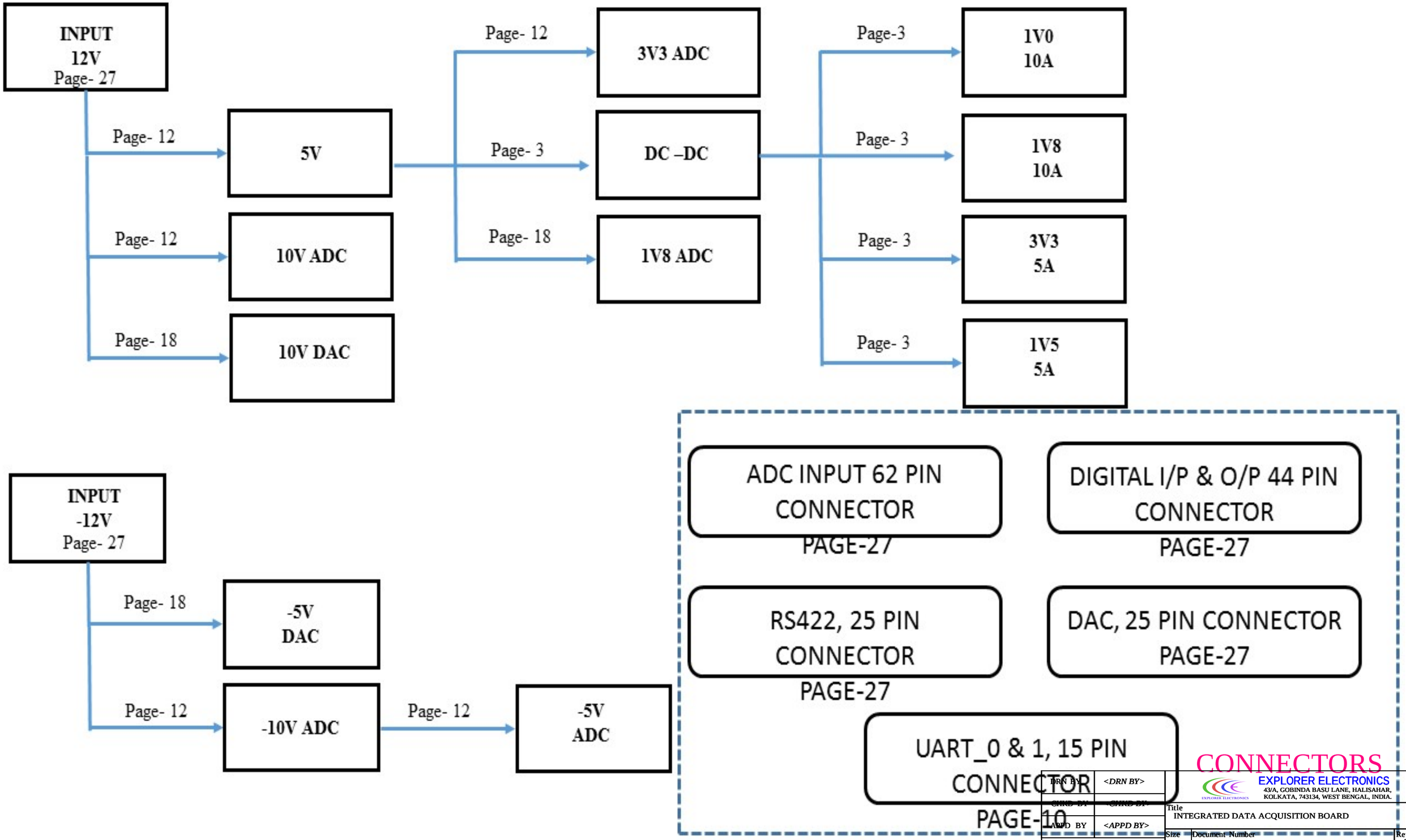


| | | | |
|---|---|---|---|
| DRN BY | <DRN BY> | EXPLORER ELECTRONICS 43/A, GOBINDA BASU LANE, HALISAHAR, KOLKATA, 743134, WEST BENGAL, INDIA. | |
| CHKD BY | <CHKD BY> | Title INTEGRATED DATA ACQUISITION BOARD | |
| APPD BY | <APPD BY> | | |
| PROPRIETARY INFORMATION NO DISSEMINATION OR USE ALLOWED WITHOUT PRIOR WRITTEN PERMISSION. | | Size A3 / Document Number FPGA BLOCK | Rev ? |
| | | Date: Friday, September 05, 2025 | Sheet 2 of 27 |

# POWER SUPPLY

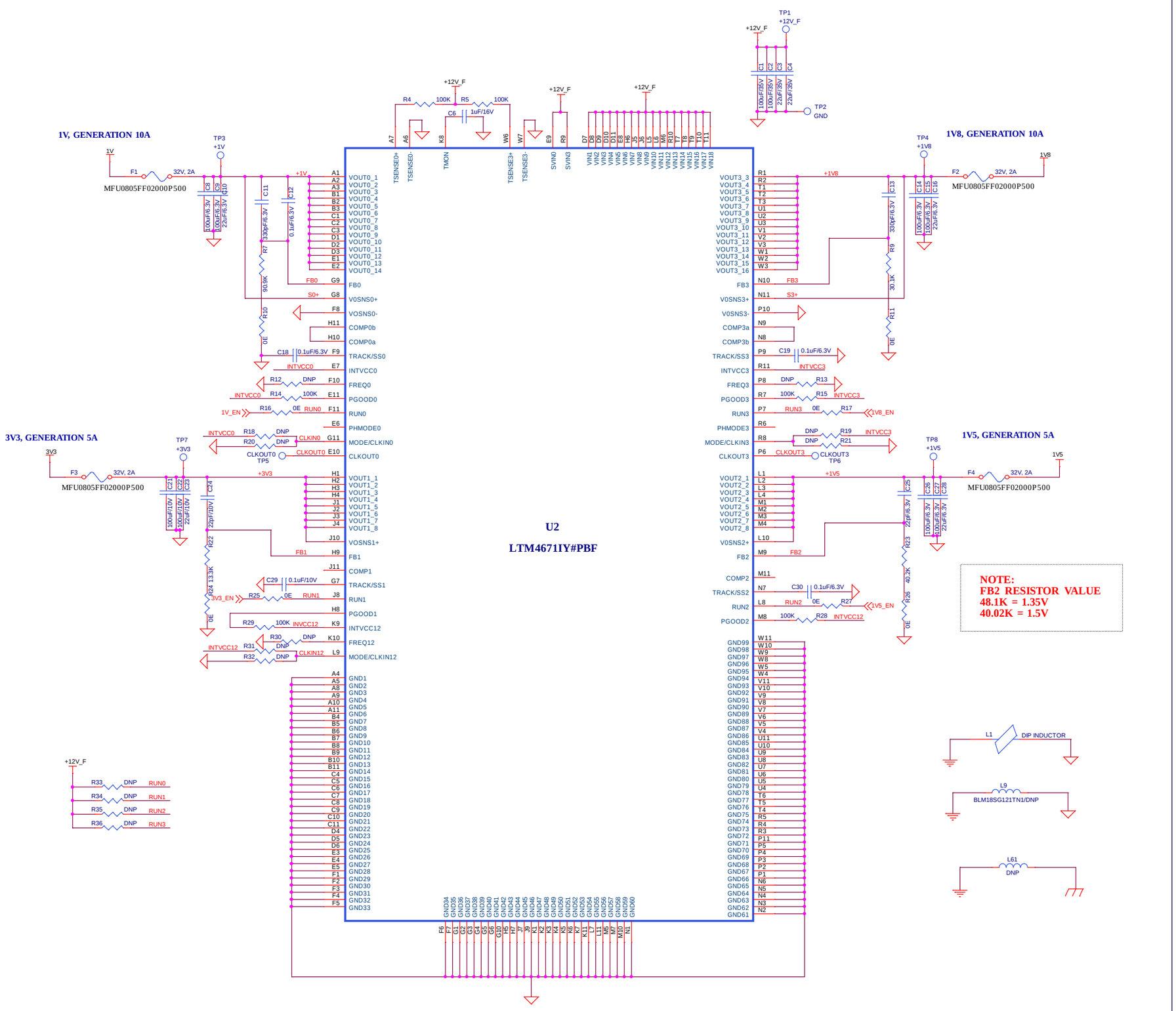


# POWER SEQUENCING CIRCUIT

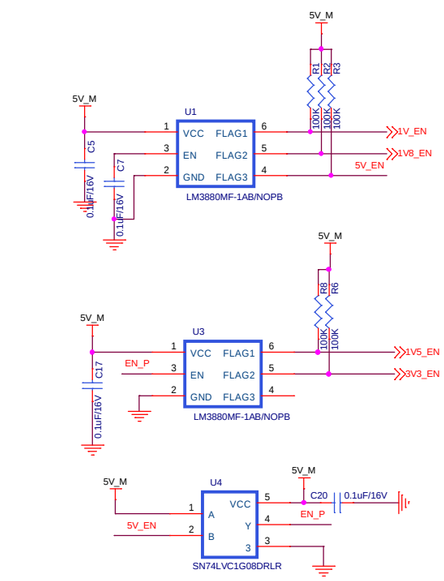


# 5V DIGITAL

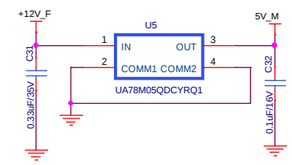


# COMMON MODE CHOKE

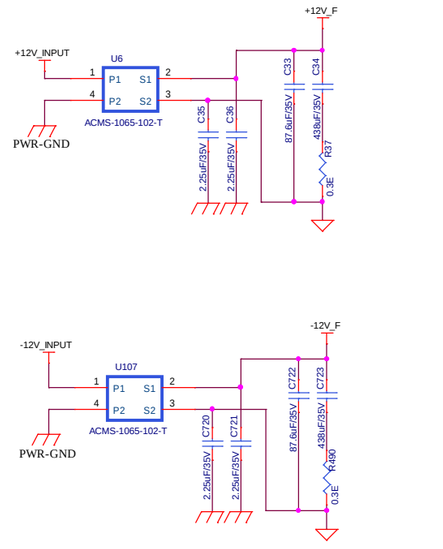


| | | |
|---|---|---|
| DRN BY | <DRN BY> | EXPLORER ELECTRONICS 43/A, GOBINDA BASU LANE, HALISAHAR, KOLKATA, 743134, WEST BENGAL, INDIA. |
| CHKD BY | <CHKD BY> | Title: INTEGRATED DATA ACQUISITION BOARD |
| APPD BY | <APPD BY> | Size: A2 — Document Number: POWER GENERATION — Rev: ? |
| PROPRIETARY INFORMATION — NO DISSEMINATION OR USE ALLOWED WITHOUT PRIOR WRITTEN PERMISSION. | | Date: Friday, September 05, 2025 — Sheet 3 of 27 |

# FPGA POWER BANK

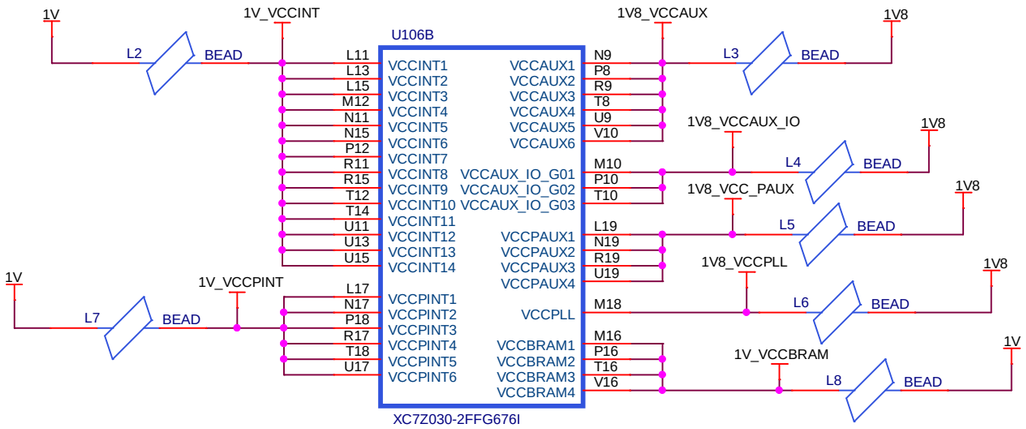


# FPGA POWER BANK - DECOUPLING CAPACITORS

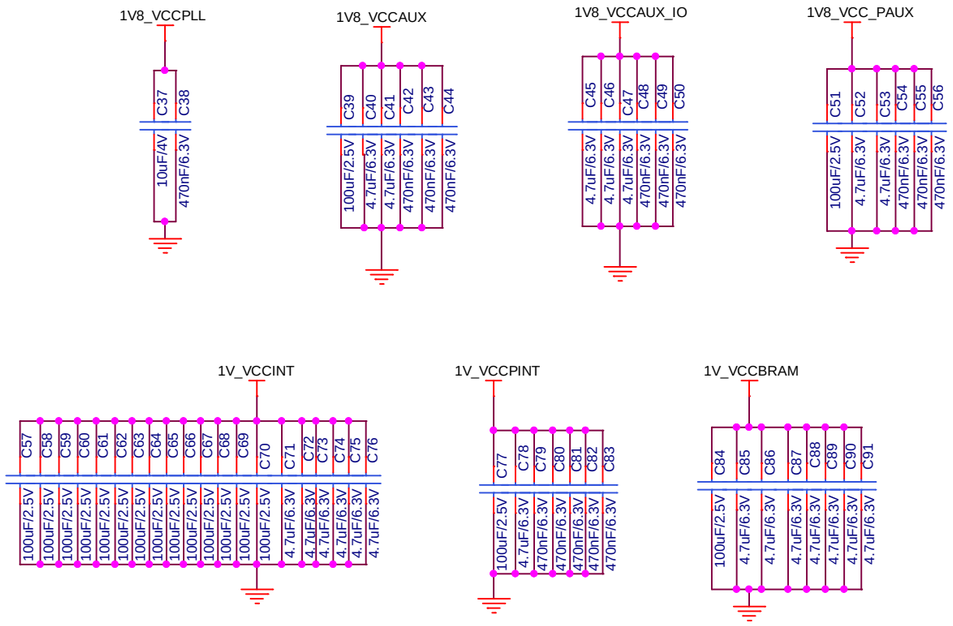


# FPGA GROUND BANK

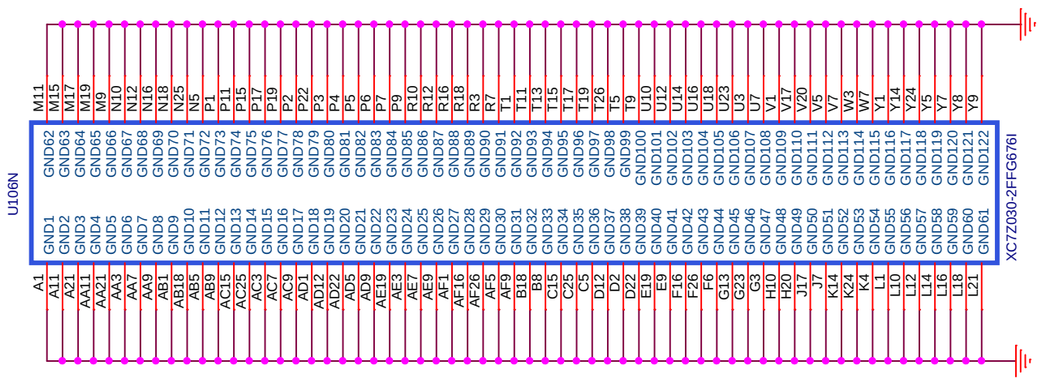


# FPGA UNUSED MGT BANK

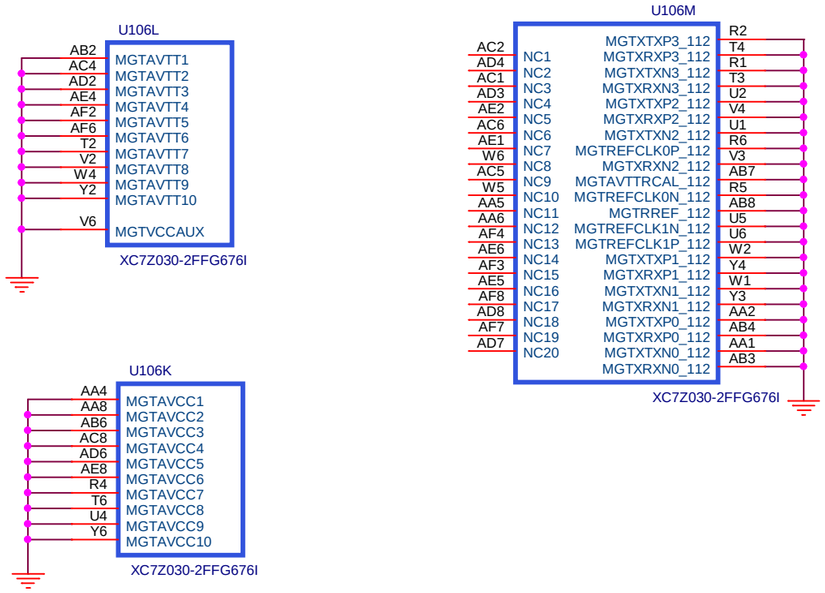


| | | |
|---|---|---|
| DRN BY | <DRN BY> | EXPLORER ELECTRONICS<br>43/A, GOBINDA BASU LANE, HALISAHAR,<br>KOLKATA, 743134, WEST BENGAL, INDIA. |
| CHKD BY | <CHKD BY> | Title<br>INTEGRATED DATA ACQUISITION BOARD |
| APPD BY | <APPD BY> | Size A3 · Document Number DECOUPLING & GND BANK · Rev ? |
| PROPRIETARY INFORMATION<br>NO DISSEMINATION OR USE ALLOWED WITHOUT PRIOR WRITTEN PERMISSION. | | Date: Friday, September 05, 2025 · Sheet 4 of 27 |

# PROCESSOR CLOCK

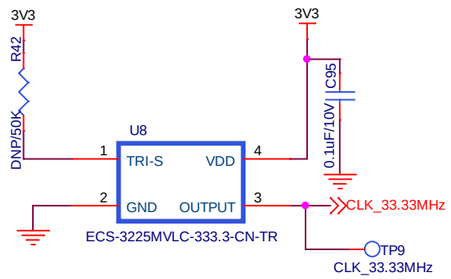


# POWER ON RESET

C44 VALUE
140ms(DELAY) INTERNALY FIXED
WE PUT DNP FOR ADJUSTABLE
DELAY TIMMING.

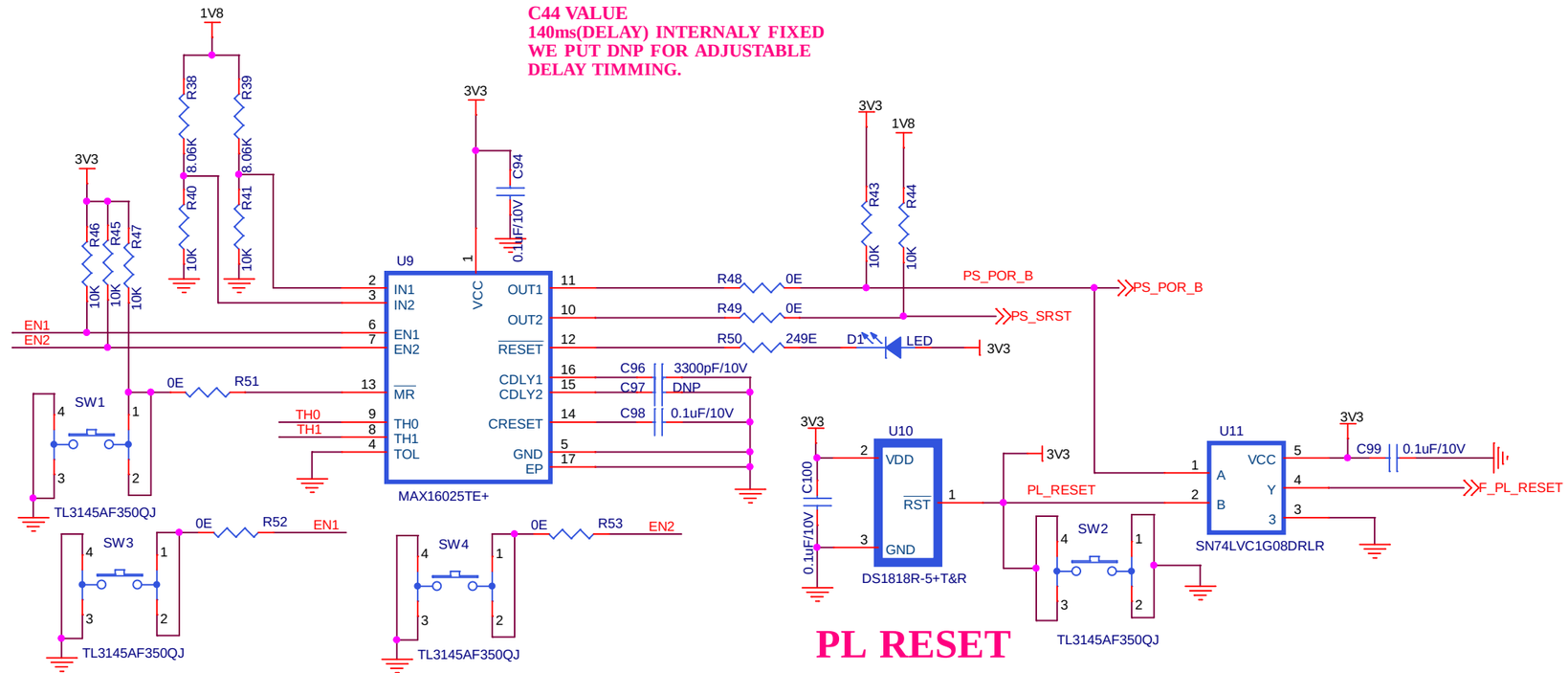


# PL RESET

# CONFIGURATION BANK

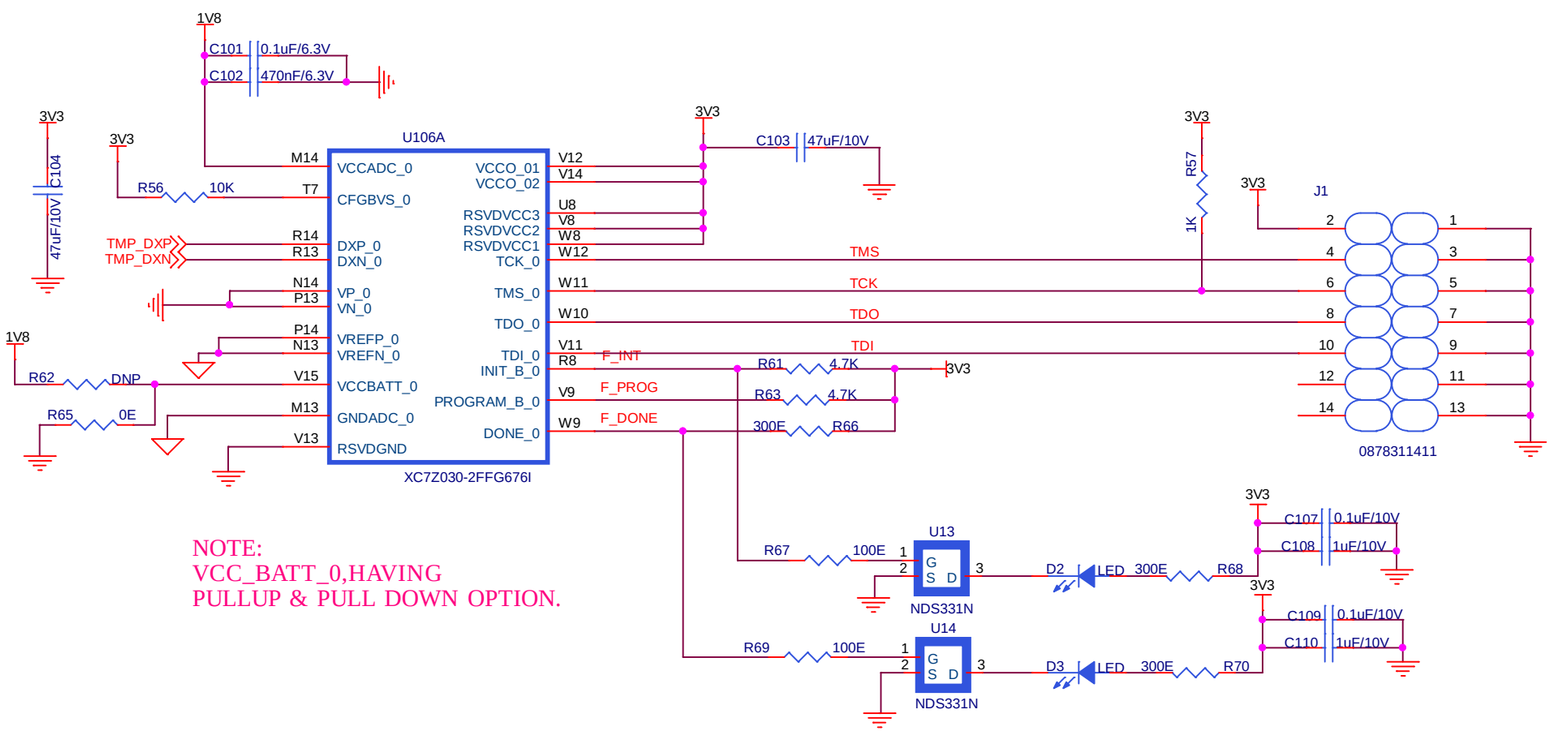


NOTE:
VCC_BATT_0,HAVING
PULLUP & PULL DOWN OPTION.

# JTAG

# TEMPERATURE SENSOR

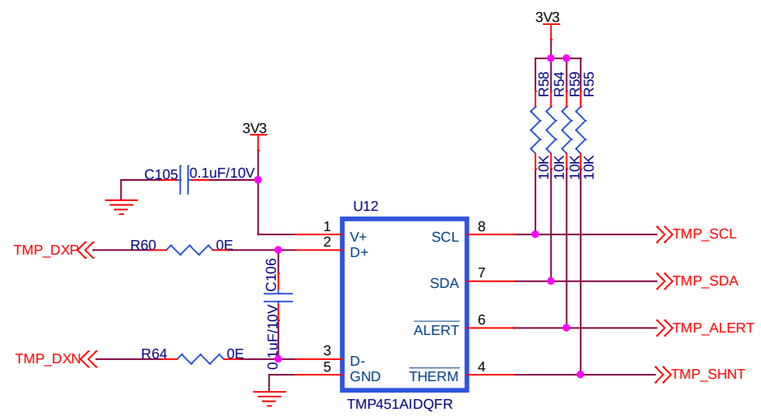


| | | |
|---|---|---|
| DRN BY | <DRN BY> | EXPLORER ELECTRONICS 43/A, GOBINDA BASU LANE, HALISAHAR, KOLKATA, 743134, WEST BENGAL, INDIA. |
| CHKD BY | <CHKD BY> | Title INTEGRATED DATA ACQUISITION BOARD |
| APPD BY | <APPD BY> | Size A3 — Document Number POR_CONFIG_TEMP/S_CLOCK — Rev ? |
| PROPRIETARY INFORMATION NO DISSEMINATION OR USE ALLOWED WITHOUT PRIOR WRITTEN PERMISSION. | | Date: Friday, September 05, 2025 — Sheet 5 of 27 |

# DDR3 - 8Gb - 32 BIT MEMORY

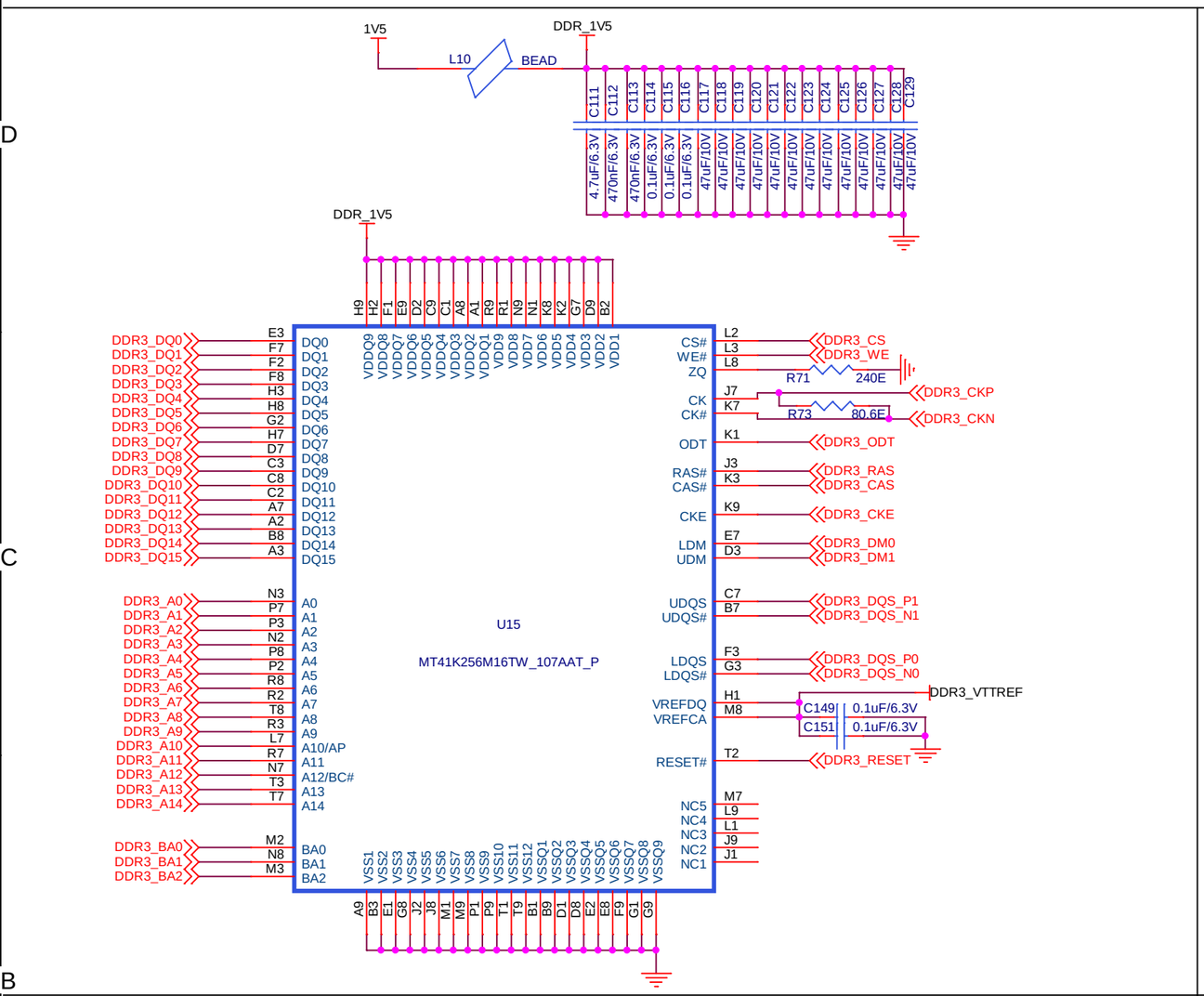


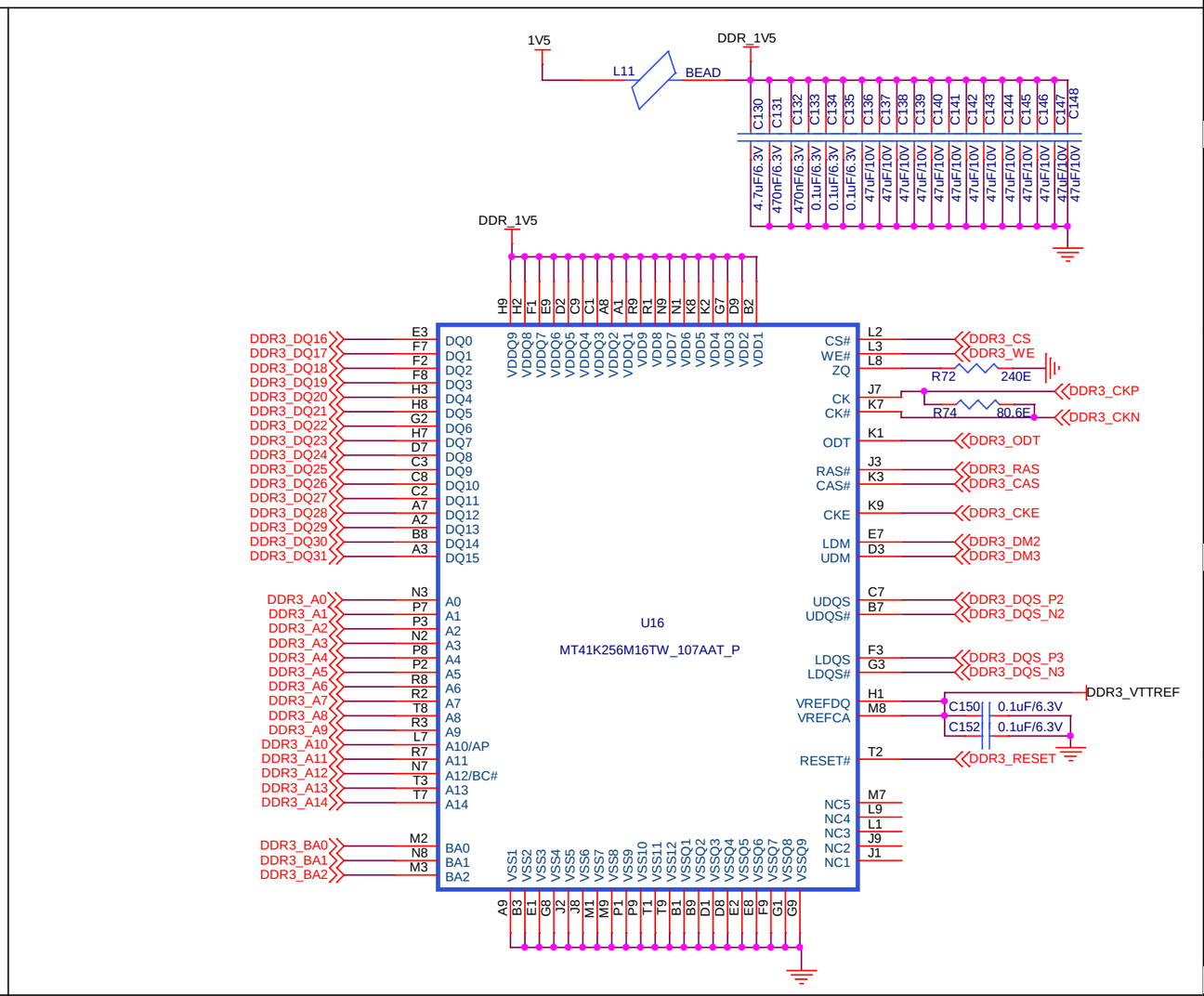


## DDR3 REFERENCE & TERMINATION SUPPLY ( 0.75V )

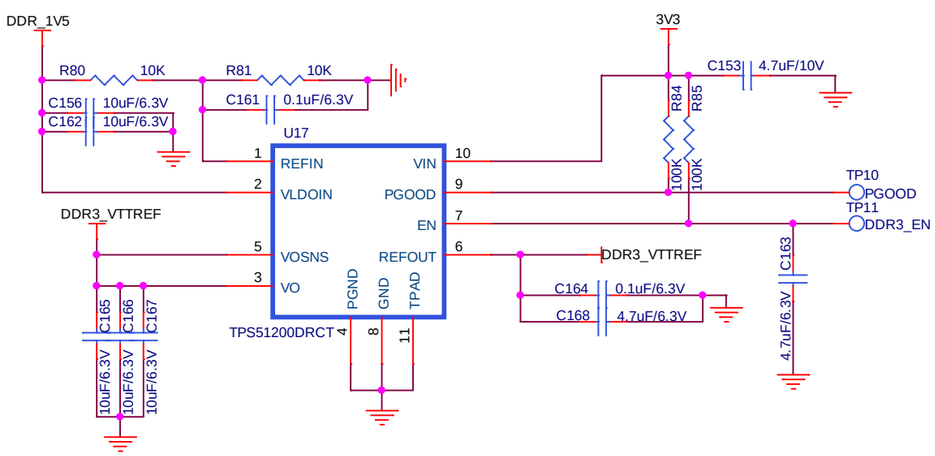


## DDR3 TERMINATION RESISTORS

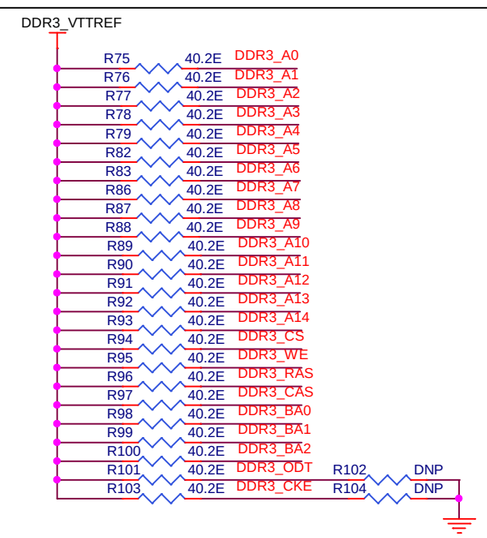


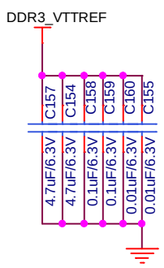


| | | |
|---|---|---|
| DRN BY | <DRN BY> | EXPLORER ELECTRONICS 43/A, GOBINDA BASU LANE, HALISAHAR, KOLKATA, 743134, WEST BENGAL, INDIA. |
| CHKD BY | <CHKD BY> | Title: INTEGRATED DATA ACQUISITION BOARD |
| APPD BY | <APPD BY> | Size: A3 — Document Number: DDR3 DETAILS — Rev: ? |
| PROPRIETARY INFORMATION — NO DISSEMINATION OR USE ALLOWED WITHOUT PRIOR WRITTEN PERMISSION. | | Date: Friday, September 05, 2025 — Sheet 6 of 27 |

# DDR3 - FPGA INTERFACE

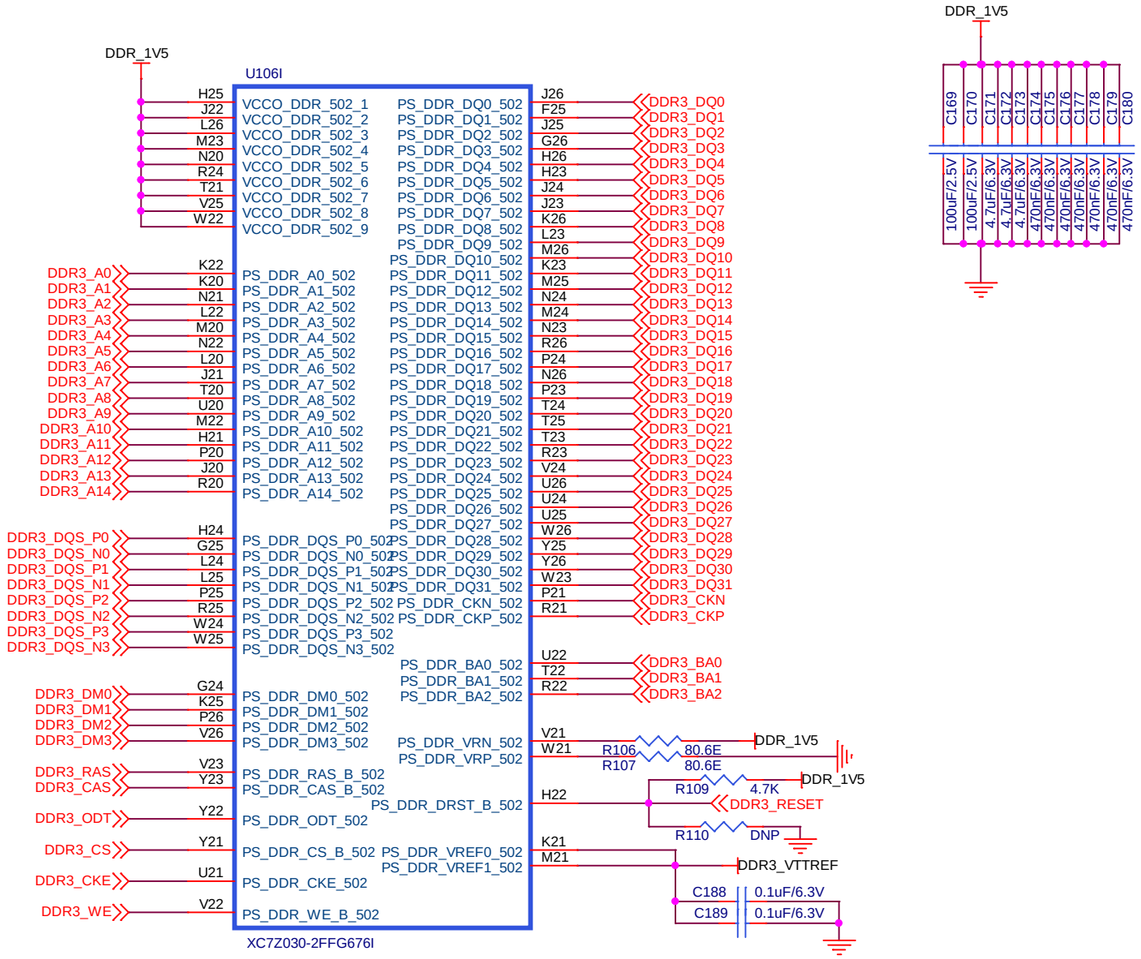





# PS - MIO BANK 501

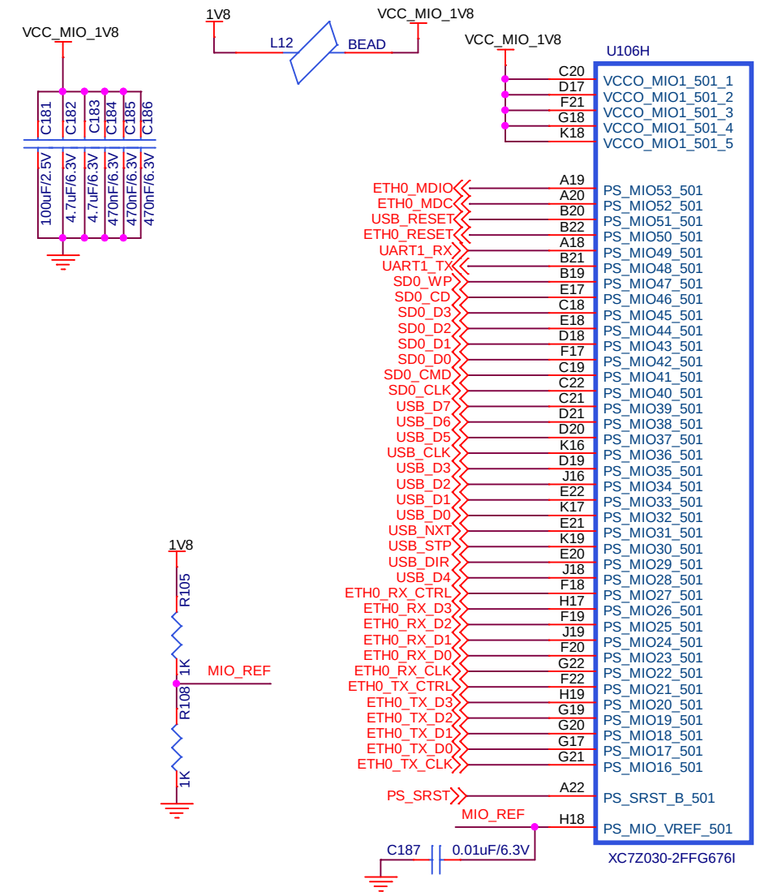


# SD CARD DETAILS

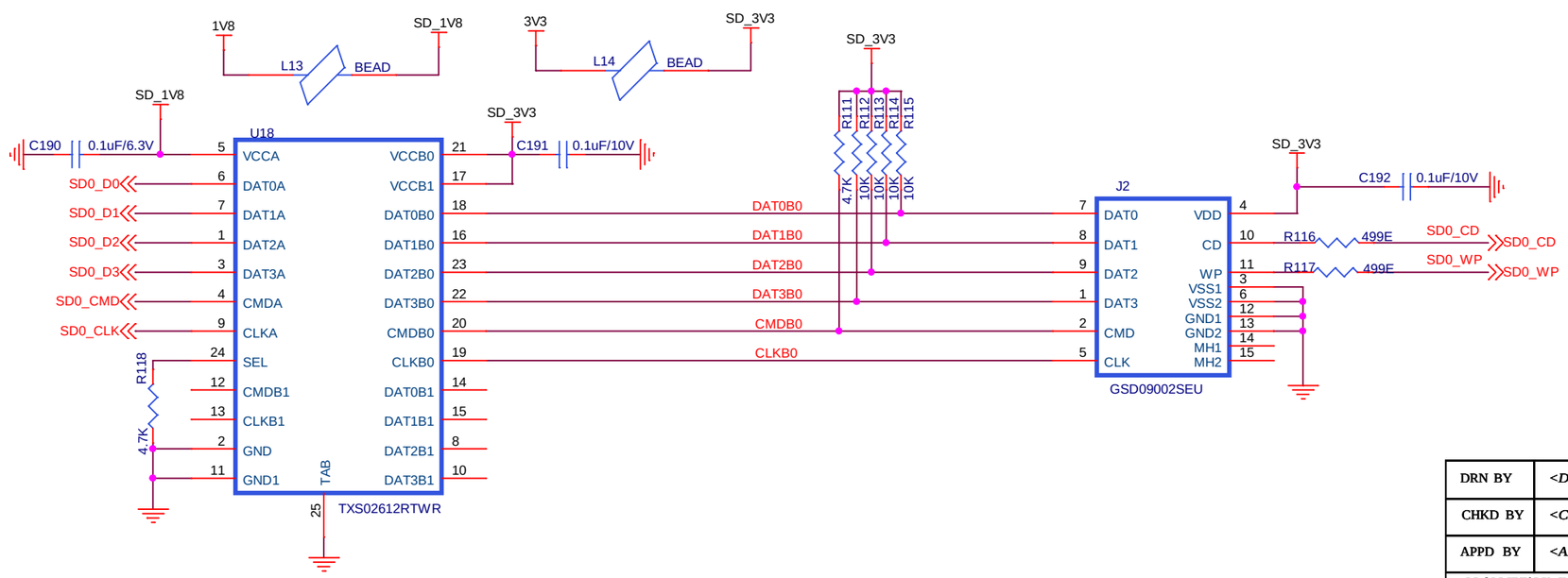


| | | |
|---|---|---|
| DRN BY | <DRN BY> | EXPLORER ELECTRONICS 43/A, GOBINDA BASU LANE, HALISAHAR, KOLKATA, 743134, WEST BENGAL, INDIA. |
| CHKD BY | <CHKD BY> | Title: INTEGRATED DATA ACQUISITION BOARD |
| APPD BY | <APPD BY> | Size: A3 — Document Number: DDR3_MIO501 & SD CARD — Rev: ? |
| PROPRIETARY INFORMATION — NO DISSEMINATION OR USE ALLOWED WITHOUT PRIOR WRITTEN PERMISSION. | | Date: Friday, September 05, 2025 — Sheet 7 of 27 |

# [88E1512-A0-NNP2I000] - ETHERNET 10/100/1000Mbps

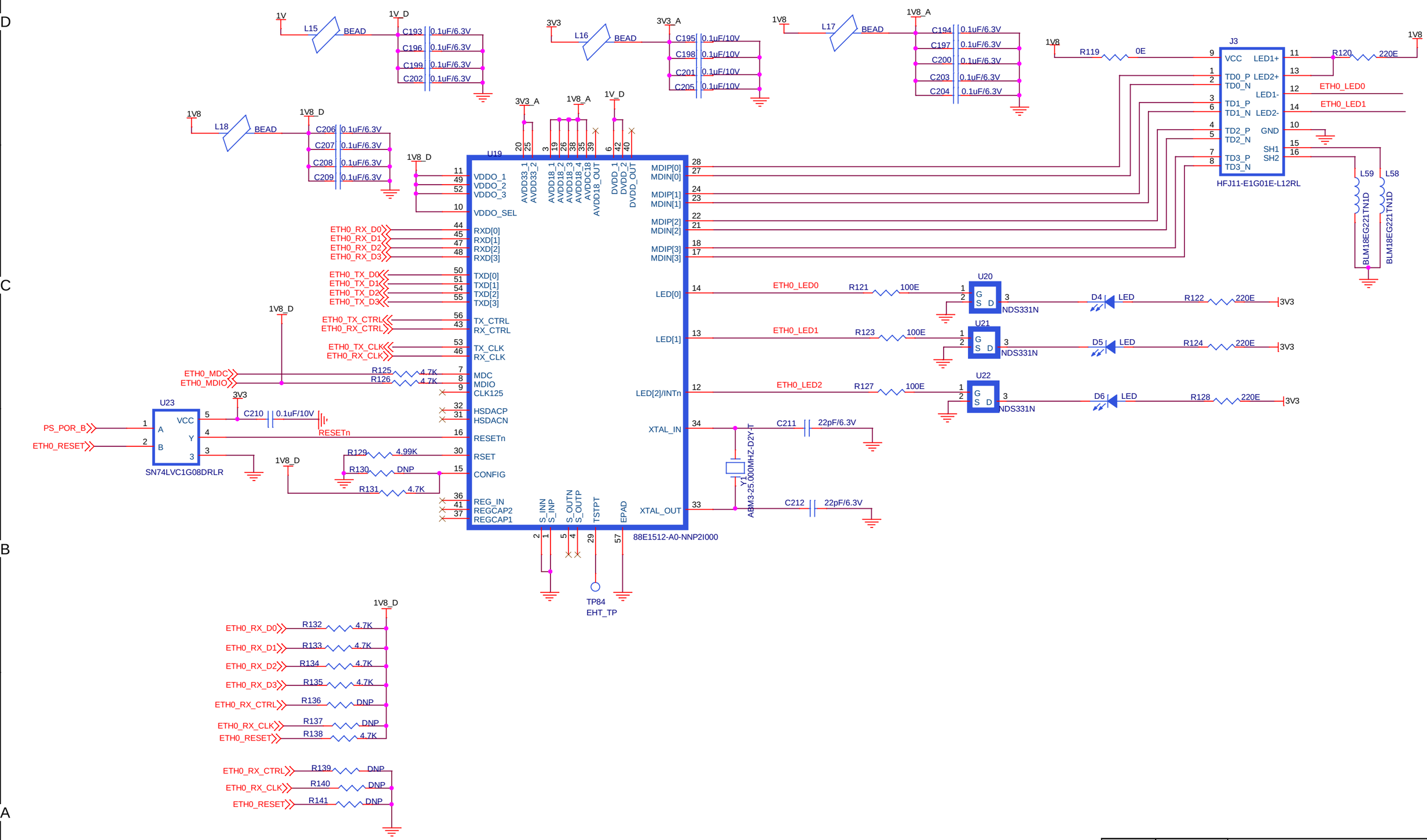


| | | |
|---|---|---|
| DRN BY | <DRN BY> | EXPLORER ELECTRONICS<br>43/A, GOBINDA BASU LANE, HALISAHAR,<br>KOLKATA, 743134, WEST BENGAL, INDIA. |
| CHKD BY | <CHKD BY> | Title<br>INTEGRATED DATA ACQUISITION BOARD |
| APPD BY | <APPD BY> | Size A3 / Document Number ETHERNET DETAILS / Rev ? |
| PROPRIETARY INFORMATION<br>NO DISSEMINATION OR USE ALLOWED WITHOUT PRIOR WRITTEN PERMISSION. | | Date: Friday, September 05, 2025 / Sheet 8 of 27 |

# USB 2.0 DETAILS

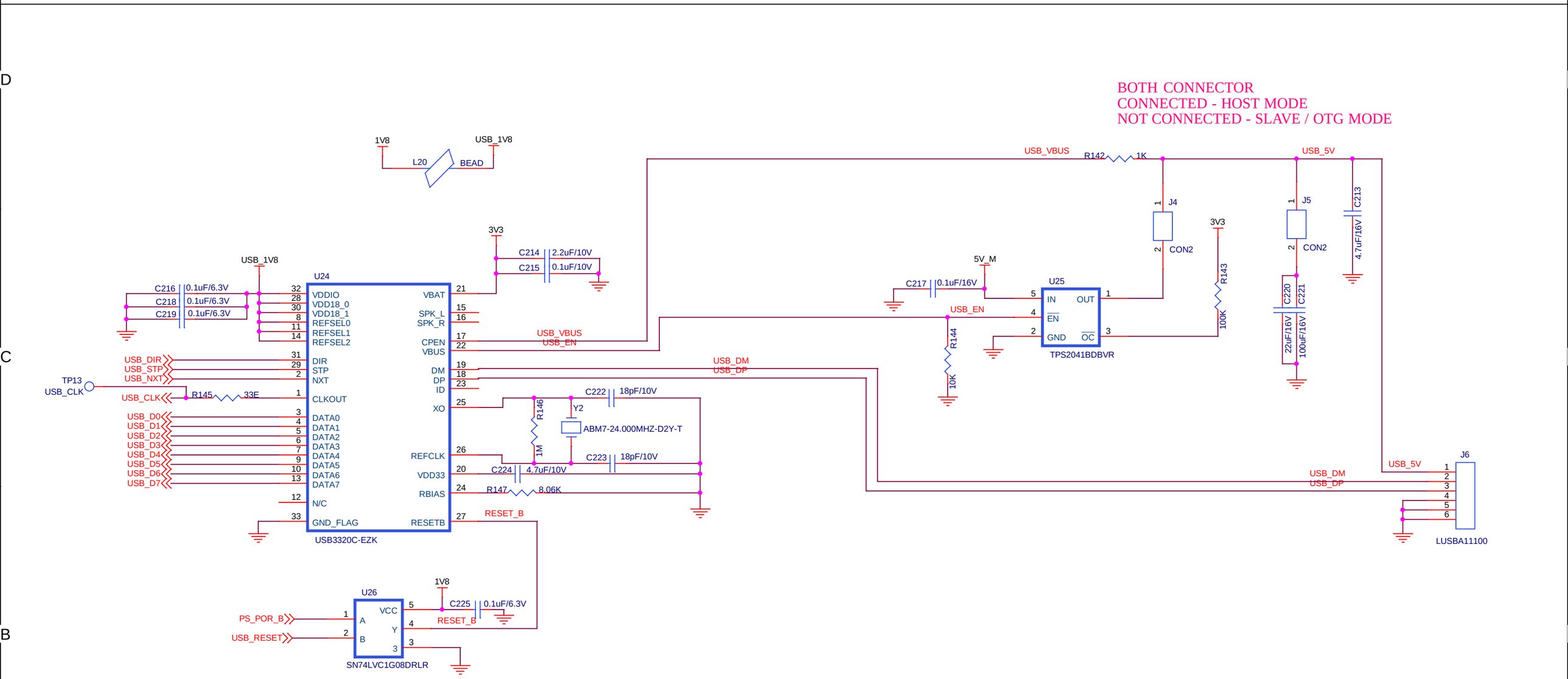


| | | |
|---|---|---|
| DRN BY | <DRN BY> | EXPLORER ELECTRONICS<br>43/A, GOBINDA BASU LANE, HALISAHAR,<br>KOLKATA, 743134, WEST BENGAL, INDIA. |
| CHKD BY | <CHKD BY> | Title<br>INTEGRATED DATA ACQUISITION BOARD |
| APPD BY | <APPD BY> | Size A3 · Document Number USB DETAILS · Rev ? |
| PROPRIETARY INFORMATION<br>NO DISSEMINATION OR USE ALLOWED WITHOUT PRIOR WRITTEN PERMISSION. | | Date: Friday, September 05, 2025 · Sheet 9 of 27 |

# UART_0- RS232

# UART_1- RS422

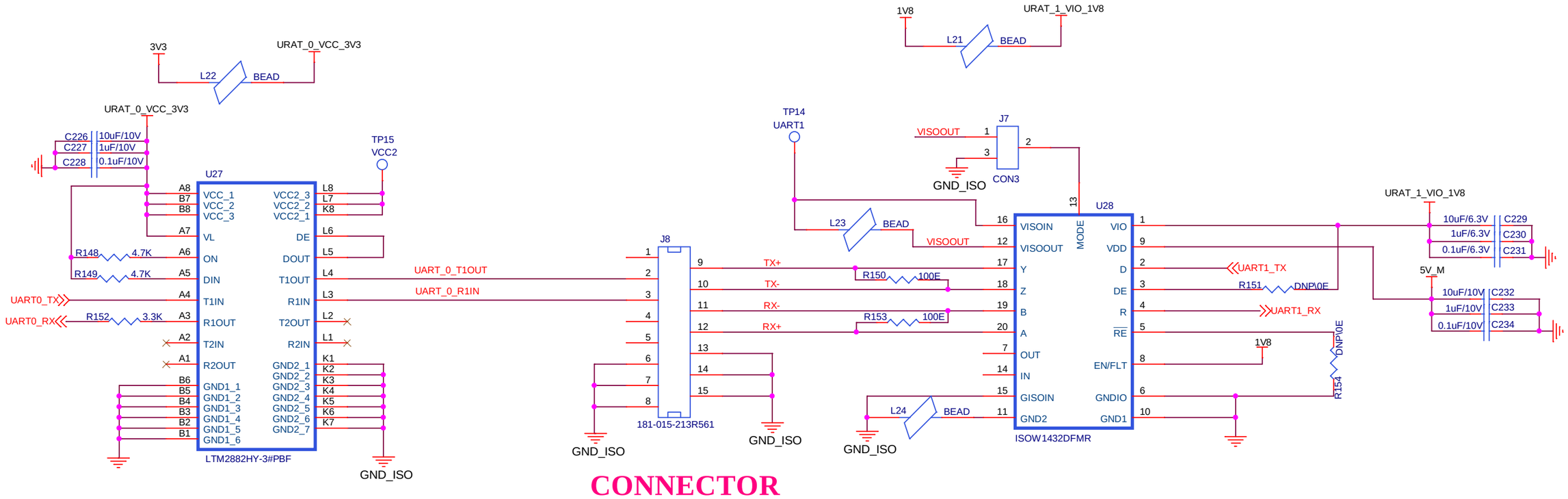


# CONNECTOR

| | | |
|---|---|---|
| DRN BY | *<DRN BY>* | EXPLORER ELECTRONICS<br>43/A, GOBINDA BASU LANE, HALISAHAR,<br>KOLKATA, 743134, WEST BENGAL, INDIA. |
| CHKD BY | *<CHKD BY>* | Title<br>INTEGRATED DATA ACQUISITION BOARD |
| APPD BY | *<APPD BY>* | Size A3 — Document Number UART 1 & 2 — Rev ? |
| PROPRIETARY INFORMATION<br>*NO DISSEMINATION OR USE ALLOWED WITHOUT PRIOR WRITTEN PERMISSION.* | | Date: Friday, September 05, 2025 — Sheet 10 of 27 |

# RTC / NVSRAM

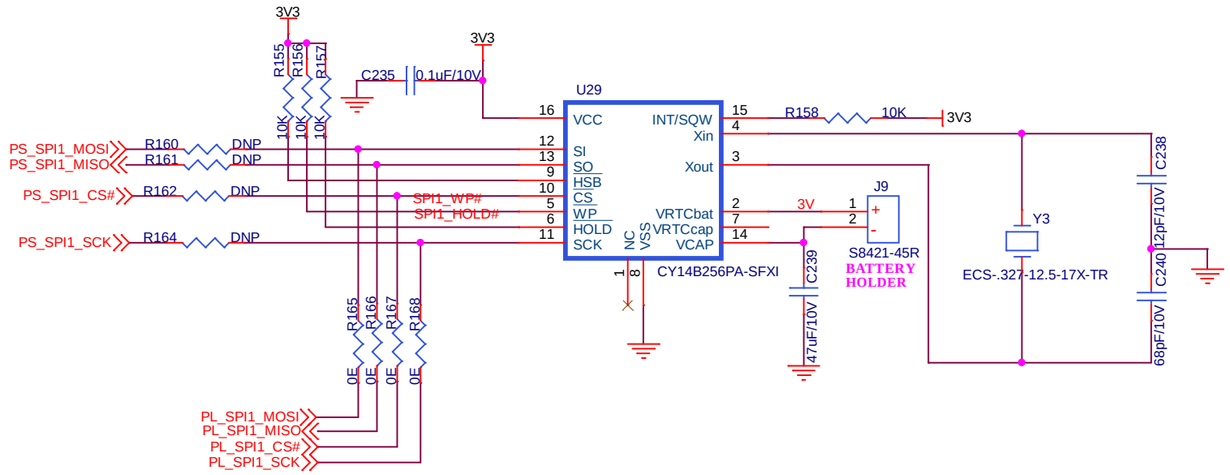


# QSPI FLASH - 512Mb

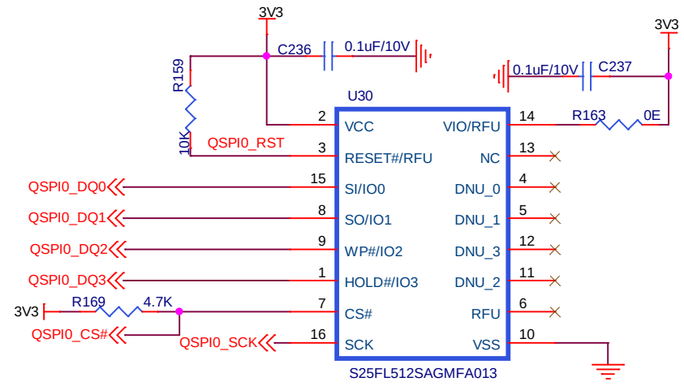


# BOOT MODE SELECTION SWITCH

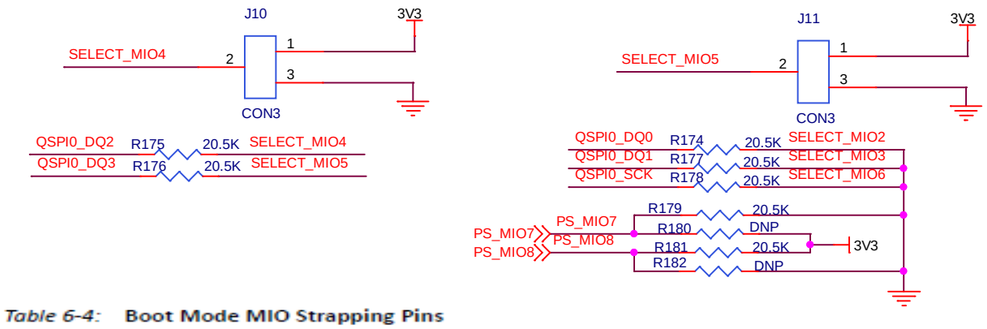


*Table 6-4:* **Boot Mode MIO Strapping Pins**

| Pin-signal / Mode | MIO[8] | MIO[7] | MIO[6] | MIO[5] | MIO[4] | MIO[3] | MIO[2] |
|---|---|---|---|---|---|---|---|
| | VMODE[1] | VMODE[0] | BOOT_MODE[4] | BOOT_MODE[0] | BOOT_MODE[2] | BOOT_MODE[1] | BOOT_MODE[3] |
| **Boot Devices** | | | | | | | |
| JTAG Boot Mode; cascaded is most common(1) | | | | 0 | 0 | 0 | JTAG Chain Routing(2) |
| NOR Boot(3) | | | | 0 | 0 | 1 | |
| NAND | | | | 0 | 1 | 0 | 0: Cascade mode |
| Quad-SPI(3) | | | | 1 | 0 | 0 | 1: Independent mode |
| SD Card | | | | 1 | 1 | 0 | |
| **Mode for all 3 PLLs** | | | | | | | |
| PLL Enabled | | | 0 | Hardware waits for PLL to lock, then executes BootROM. | | | |
| PLL Bypassed | | | 1 | Allows for a wide PS_CLK frequency range. | | | |
| **MIO Bank Voltage(4)** | | | | | | | |
| | Bank 1 | Bank 0 | Voltage Bank 0 includes MIO pins 0 thru 15. Voltage Bank 1 includes MIO pins 16 thru 53. | | | | |
| 2.5 V, 3.3 V | 0 | 0 | | | | | |
| 1.8 V | 1 | 1 | | | | | |

# PS - MIO BANK 500

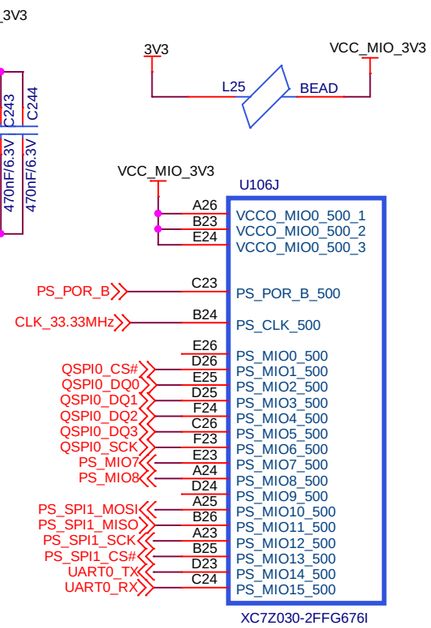


| | | |
|---|---|---|
| DRN BY | *<DRN BY>* | EXPLORER ELECTRONICS 43/A, GOBINDA BASU LANE, HALISAHAR, KOLKATA, 743134, WEST BENGAL, INDIA. |
| CHKD BY | *<CHKD BY>* | Title: INTEGRATED DATA ACQUISITION BOARD |
| APPD BY | *<APPD BY>* | Size: A3 — Document Number: NVSRAM_QSPI_MOI500_BOOT — Rev: ? |
| PROPRIETARY INFORMATION. NO DISSEMINATION OR USE ALLOWED WITHOUT PRIOR WRITTEN PERMISSION. | | Date: Friday, September 05, 2025 — Sheet 11 of 27 |

# +5V GENERATION

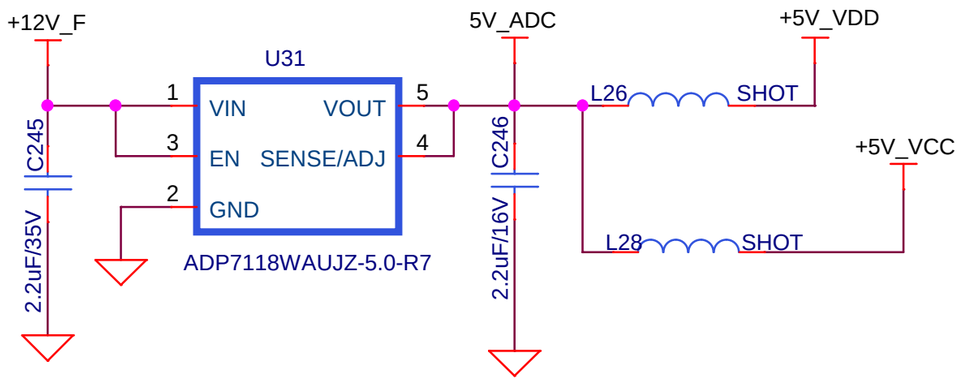


# -5V GENERATION

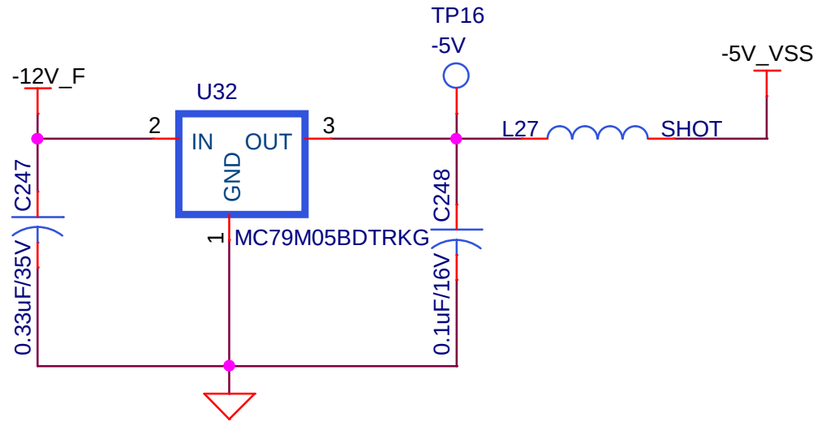


# 10V GENERATION

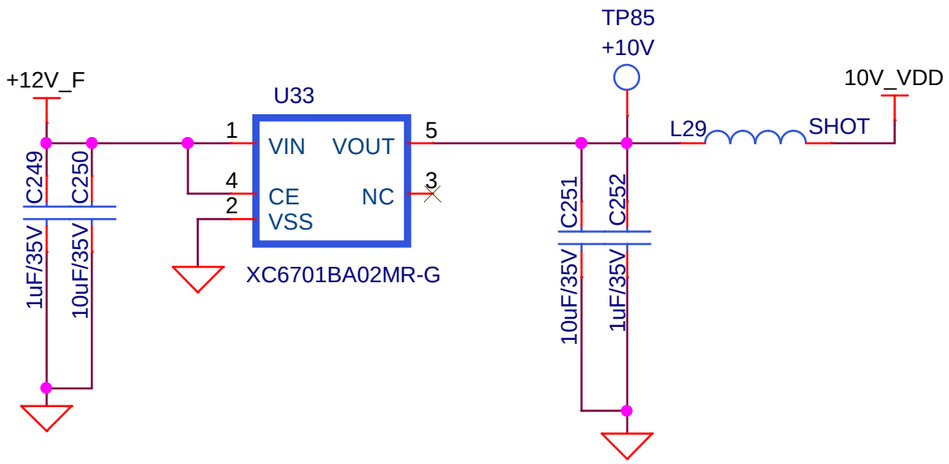


# -10V GENERATION

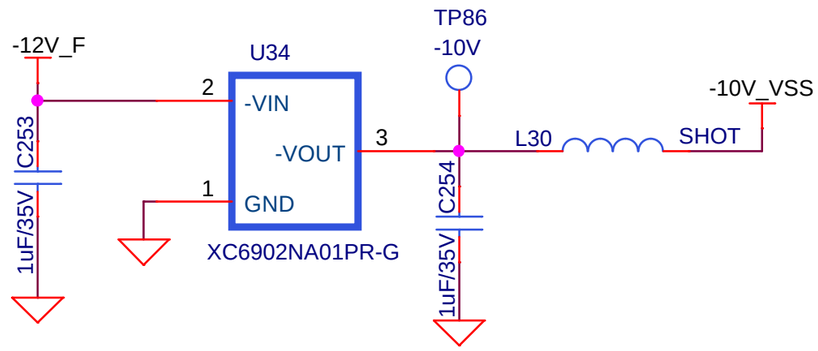


| | | |
|---|---|---|
| DRN BY | *<DRN BY>* | EXPLORER ELECTRONICS<br>43/A, GOBINDA BASU LANE, HALISAHAR,<br>KOLKATA, 743134, WEST BENGAL, INDIA. |
| CHKD BY | *<CHKD BY>* | Title<br>INTEGRATED DATA ACQUISITION BOARD |
| APPD BY | *<APPD BY>* | Size A · Document Number ADC_PWR · Rev ? |
| **PROPRIETARY INFORMATION**<br>*NO DISSEMINATION OR USE ALLOWED WITHOUT PRIOR WRITTEN PERMISSION.* | | Date: Friday, September 05, 2025 · Sheet 12 of 27 |

# AD7384-4BCPZ-ADC1

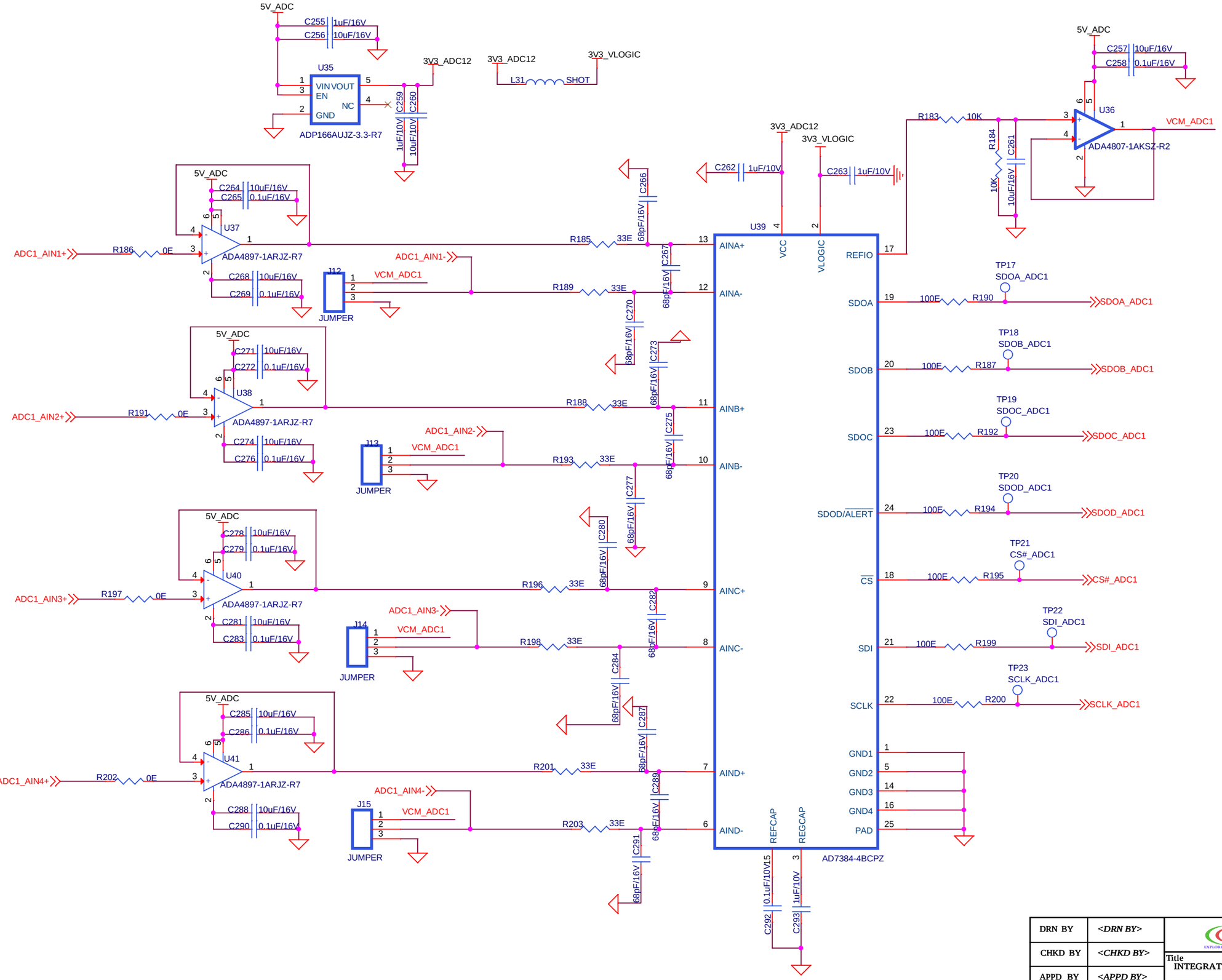


| | | |
|---|---|---|
| DRN BY | <DRN BY> | EXPLORER ELECTRONICS 43/A, GOBINDA BASU LANE, HALISAHAR, KOLKATA, 743134, WEST BENGAL, INDIA. |
| CHKD BY | <CHKD BY> | Title INTEGRATED DATA ACQUISITION BOARD |
| APPD BY | <APPD BY> | Size A3 · Document Number ADC1 · Rev ? |
| PROPRIETARY INFORMATION NO DISSEMINATION OR USE ALLOWED WITHOUT PRIOR WRITTEN PERMISSION. | | Date: Friday, September 05, 2025 · Sheet 13 of 27 |

# AD7384-4BCPZ-ADC2

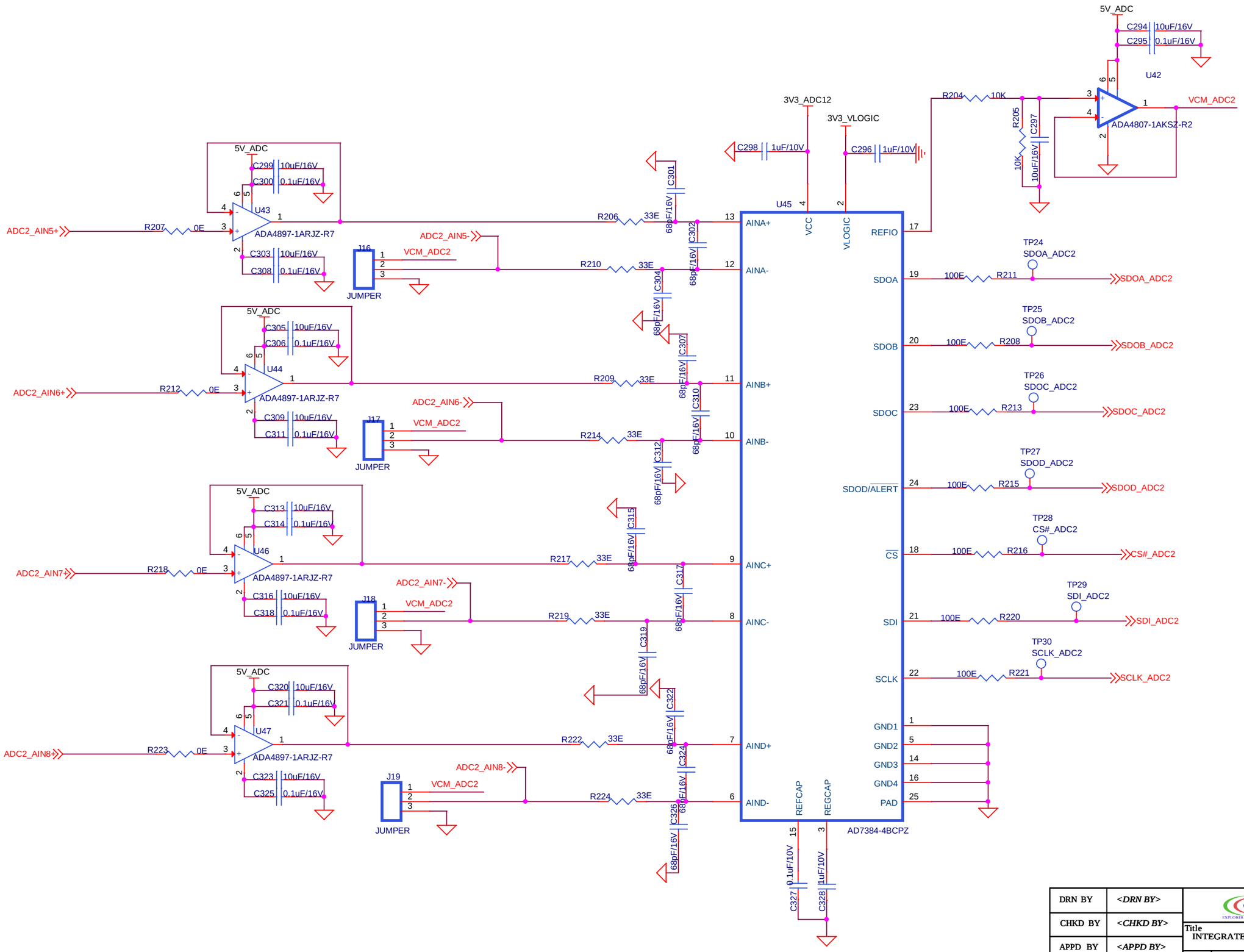


| | | |
|---|---|---|
| DRN BY | <DRN BY> | EXPLORER ELECTRONICS 43/A, GOBINDA BASU LANE, HALISAHAR, KOLKATA, 743134, WEST BENGAL, INDIA. |
| CHKD BY | <CHKD BY> | Title INTEGRATED DATA ACQUISITION BOARD |
| APPD BY | <APPD BY> | Size A3 · Document Number ADC2 · Rev ? |
| PROPRIETARY INFORMATION NO DISSEMINATION OR USE ALLOWED WITHOUT PRIOR WRITTEN PERMISSION. | | Date: Friday, September 05, 2025 · Sheet 14 of 27 |

# AD7328BRUZ-ADC3 (SINGLE ENDED WITH INPUT BUFFER)

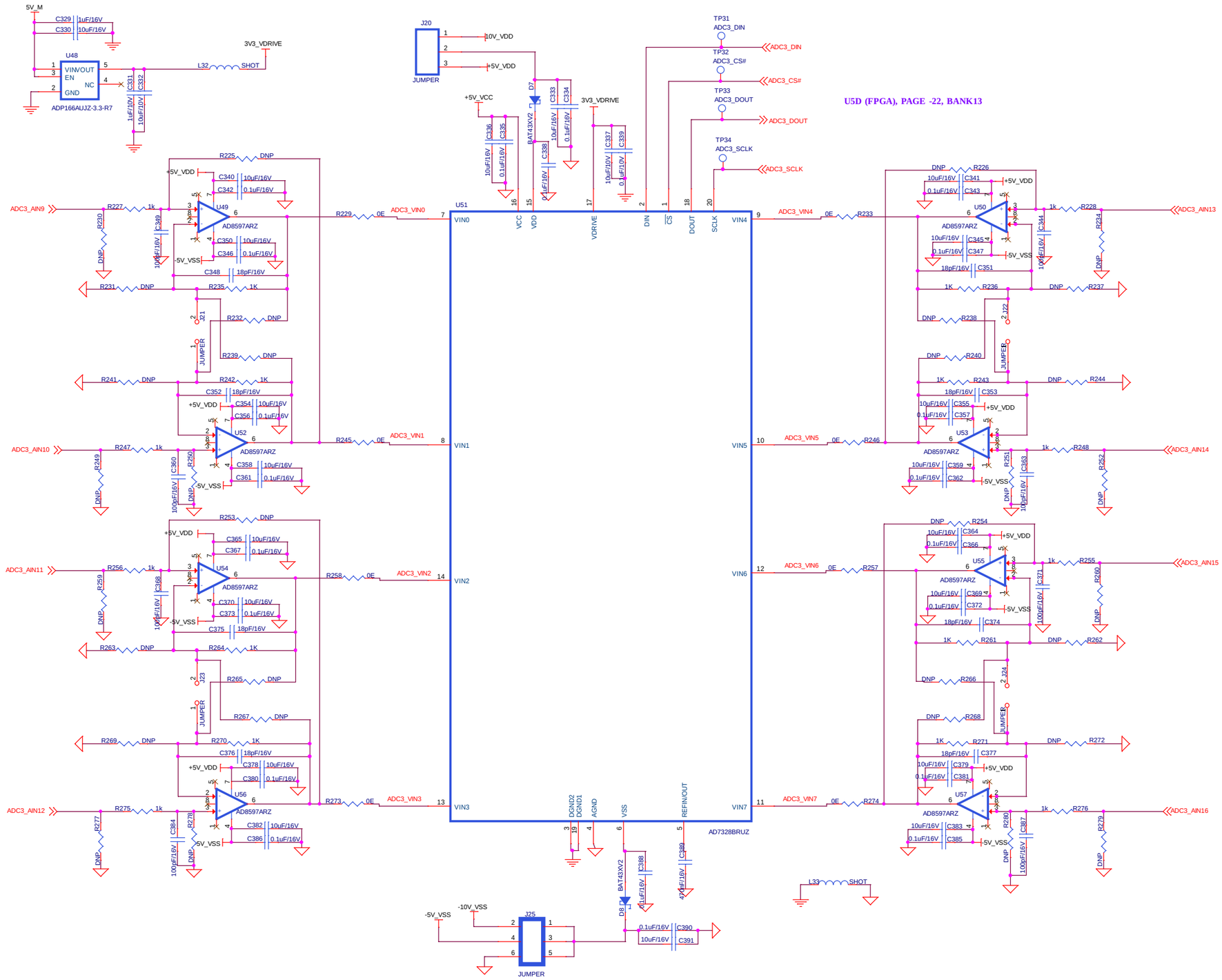


| | | |
|---|---|---|
| DRN BY | <DRN BY> | EXPLORER ELECTRONICS<br>43/A, GOBINDA BASU LANE, HALISAHAR, KOLKATA, 743134, WEST BENGAL, INDIA |
| CHKD BY | <CHKD BY> | Title<br>INTEGRATED DATA ACQUISITION BOARD |
| APPD BY | <APPD BY> | Size A2 · Document Number ADC3 · Rev ? |
| PROPRIETARY INFORMATION<br>NO DISSEMINATION OR USE ALLOWED WITHOUT PRIOR WRITTEN PERMISSION. | | Date: Friday, September 05, 2025 · Sheet 15 of 27 |

# AD7328BRUZ-ADC4 (SINGLE ENDED WITH INPUT BUFFER)

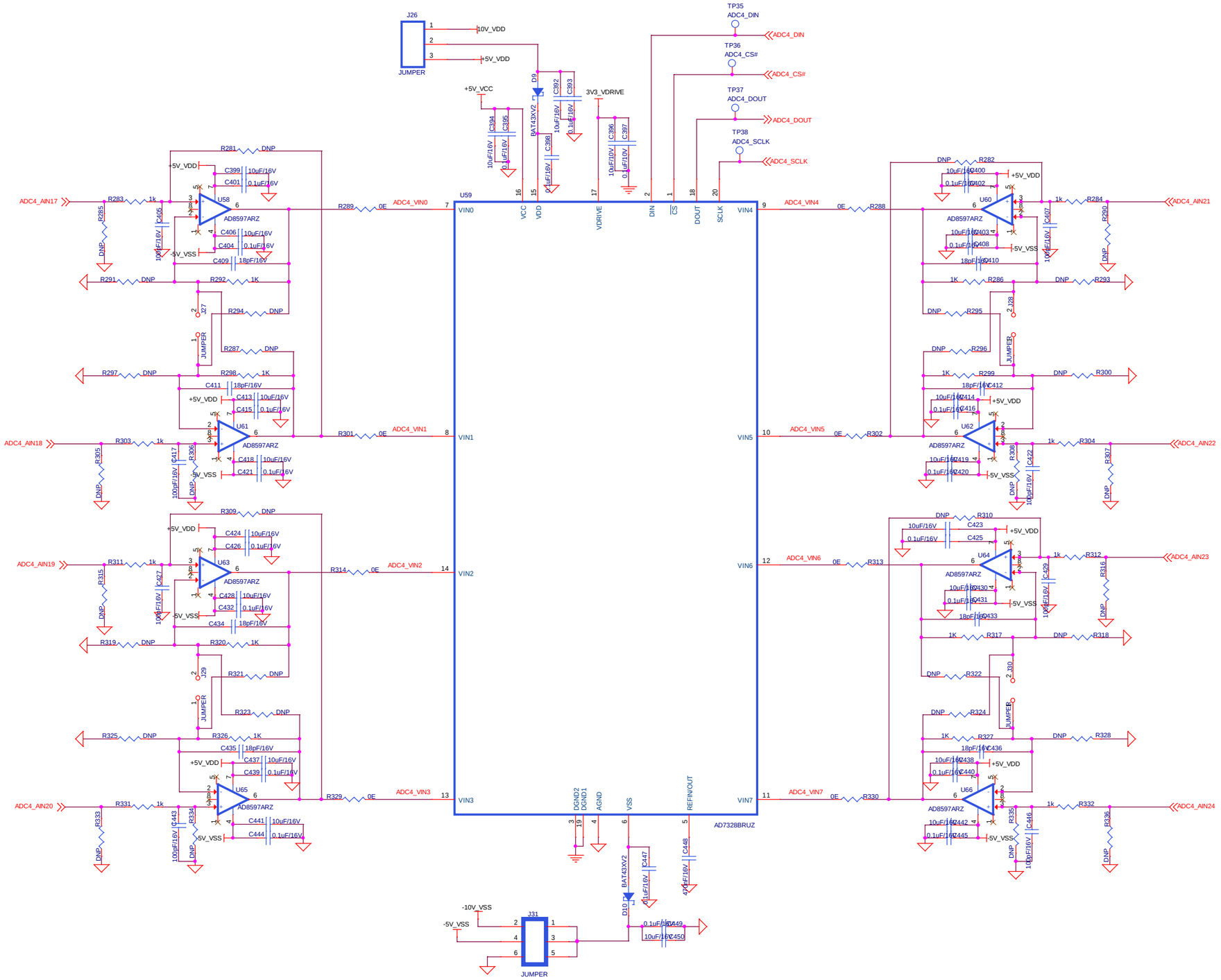


| | | |
|---|---|---|
| DRN BY | <DRN BY> | EXPLORER ELECTRONICS<br>43/A, GOBINDA BASU LANE, HALISAHAR, KOLKATA, 743134, WEST BENGAL, INDIA. |
| CHKD BY | <CHKD BY> | Title<br>INTEGRATED DATA ACQUISITION BOARD |
| APPD BY | <APPD BY> | Size A2 · Document Number ADC4 · Rev ? |
| PROPRIETARY INFORMATION<br>NO DISSEMINATION OR USE ALLOWED WITHOUT PRIOR WRITTEN PERMISSION. | | Date: Friday, September 05, 2025 · Sheet 16 of 27 |

# AD7328BRUZ-ADC5 (SINGLE ENDED WITH INPUT BUFFER)

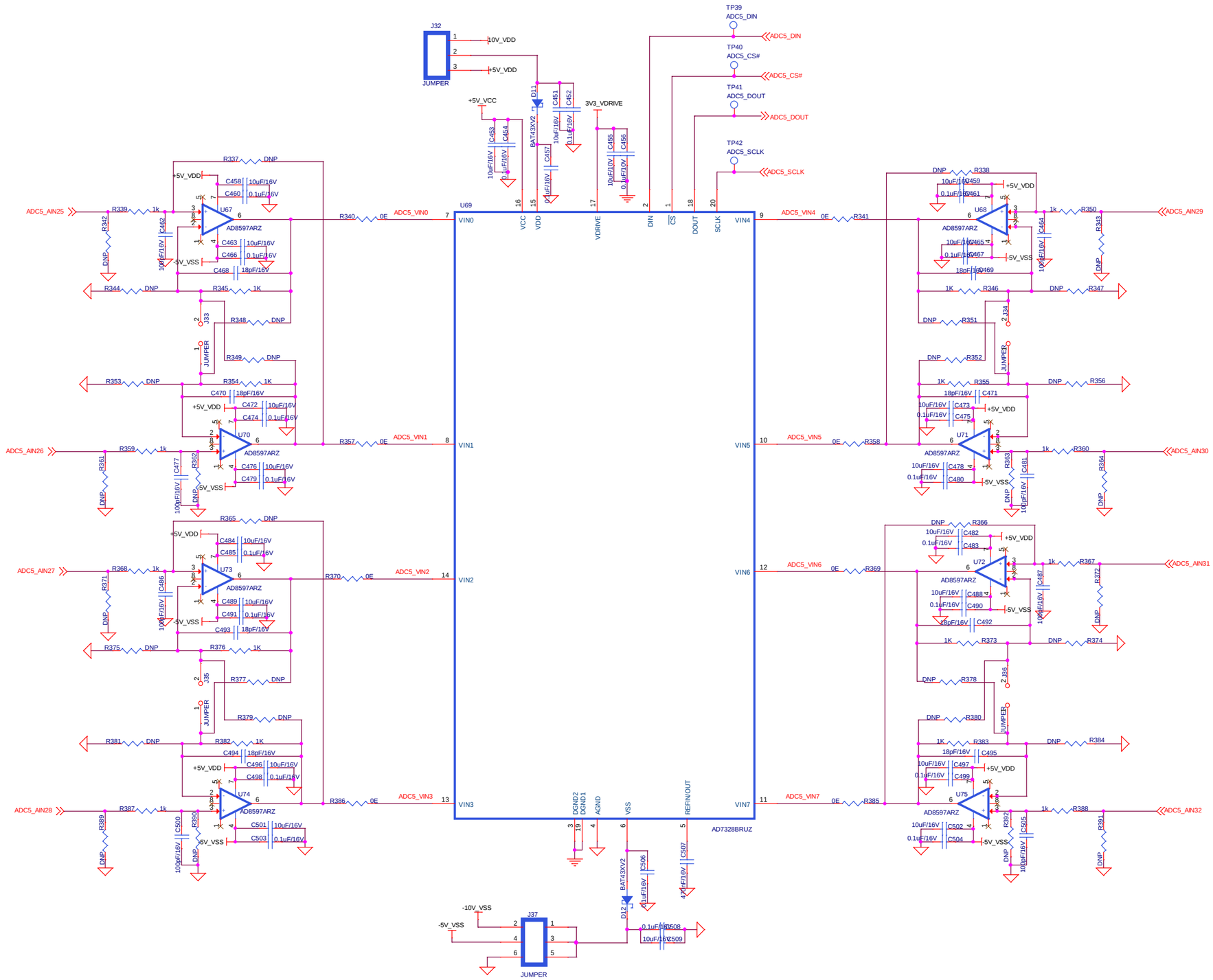


| | | |
|---|---|---|
| DRN BY | <DRN BY> | EXPLORER ELECTRONICS<br>43/A, GOBINDA BASU LANE, HALISAHAR, KOLKATA, 743134, WEST BENGAL, INDIA. |
| CHKD BY | <CHKD BY> | Title: INTEGRATED DATA ACQUISITION BOARD |
| APPD BY | <APPD BY> | Size: A2 — Document Number: ADC5 — Rev: ? |
| PROPRIETARY INFORMATION<br>NO DISSEMINATION OR USE ALLOWED WITHOUT PRIOR WRITTEN PERMISSION. | | Date: Friday, September 05, 2025 — Sheet 17 of 27 |

# AD3542RBCPZ16-DAC1

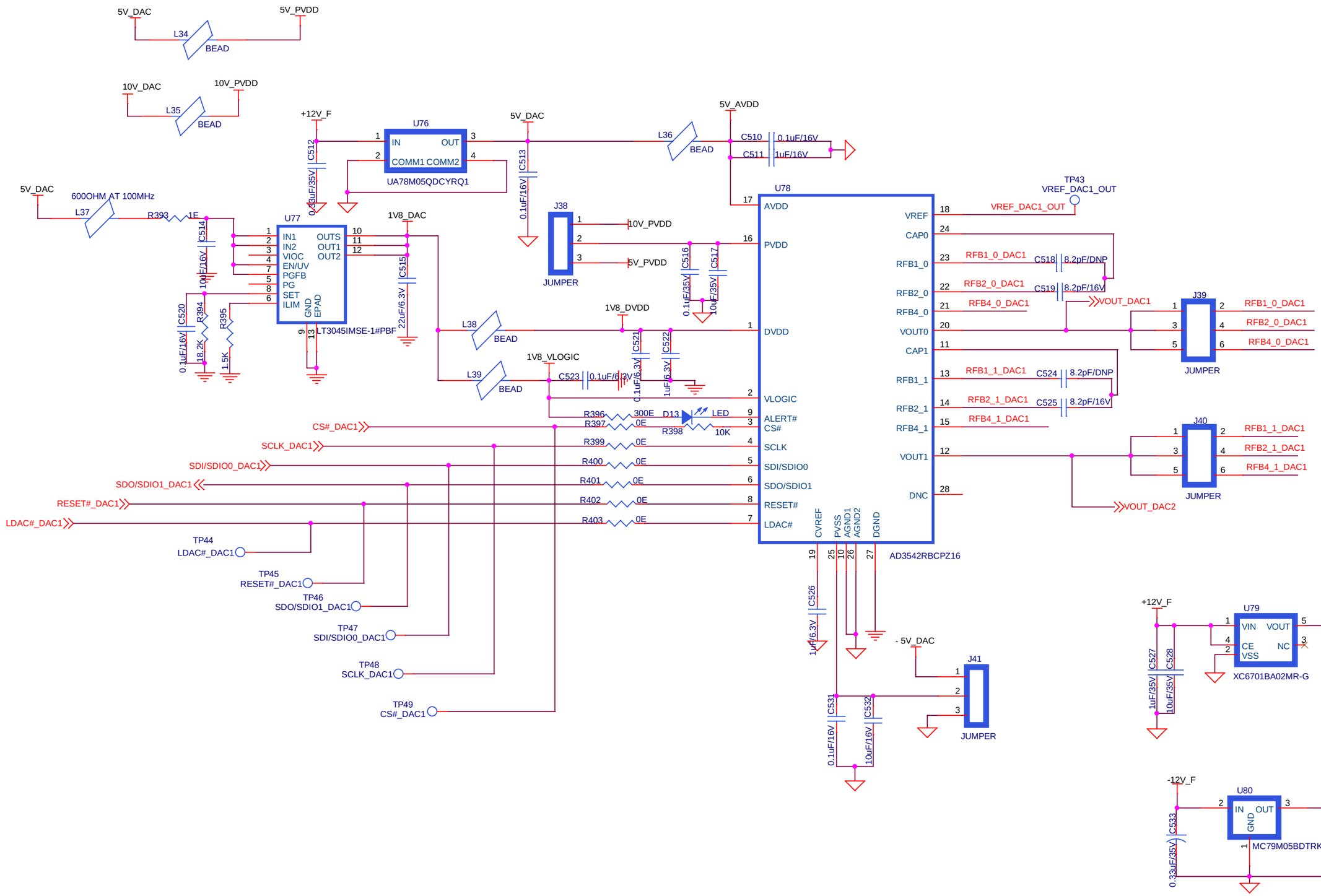


| | | |
|---|---|---|
| DRN BY | *<DRN BY>* | EXPLORER ELECTRONICS<br>43/A, GOBINDA BASU LANE, HALISAHAR,<br>KOLKATA, 743134, WEST BENGAL, INDIA. |
| CHKD BY | *<CHKD BY>* | Title<br>INTEGRATED DATA ACQUISITION BOARD |
| APPD BY | *<APPD BY>* | Size A3 · Document Number DAC1 · Rev ? |
| PROPRIETARY INFORMATION<br>*NO DISSEMINATION OR USE ALLOWED WITHOUT PRIOR WRITTEN PERMISSION.* | | Date: Friday, September 05, 2025 · Sheet 18 of 27 |

# AD3542RBCPZ16-DAC2

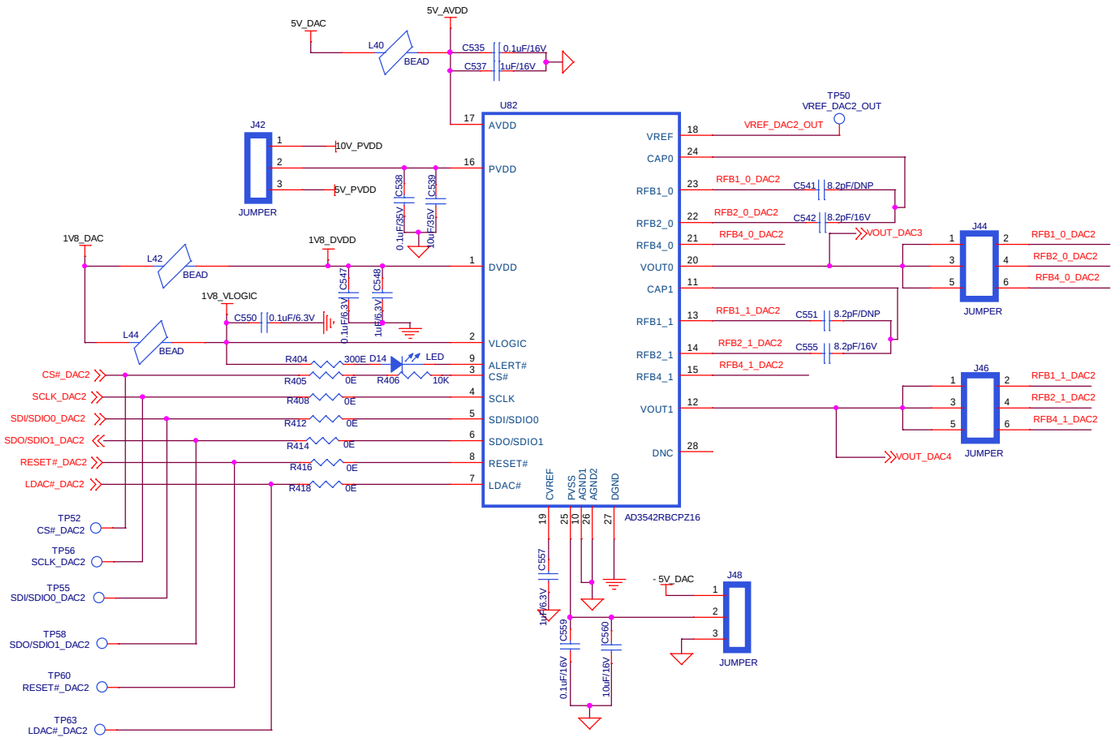


# AD3542RBCPZ16-DAC3

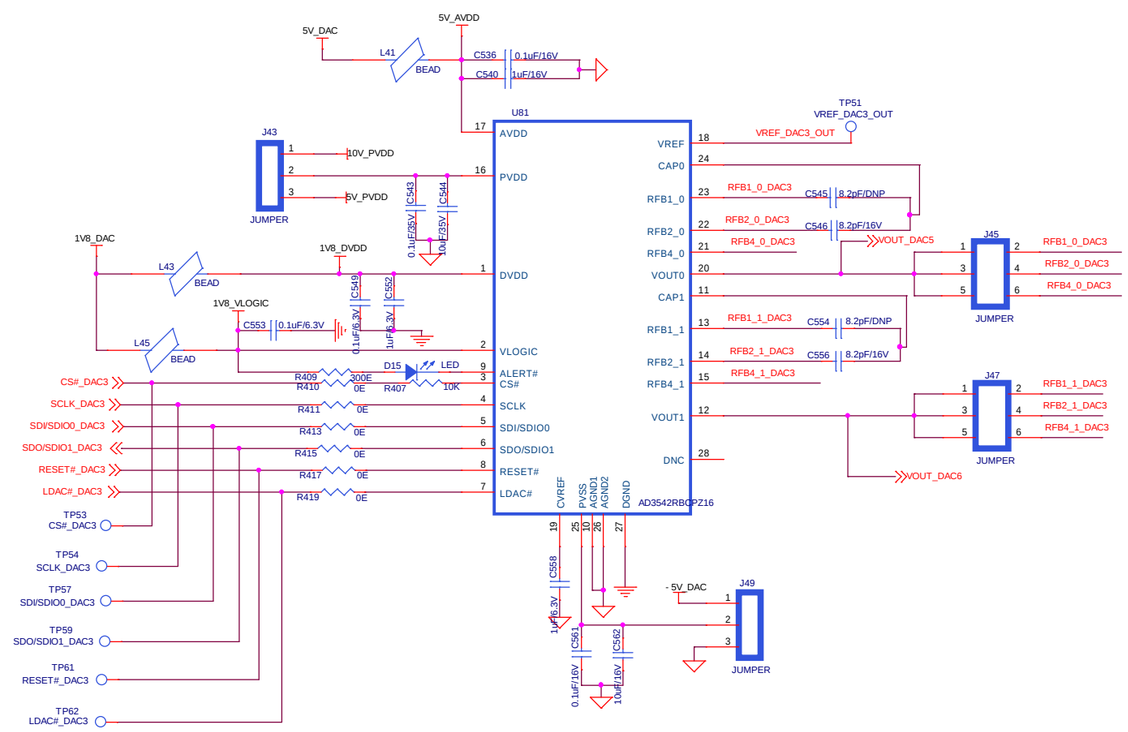


# AD3542RBCPZ16-DAC4

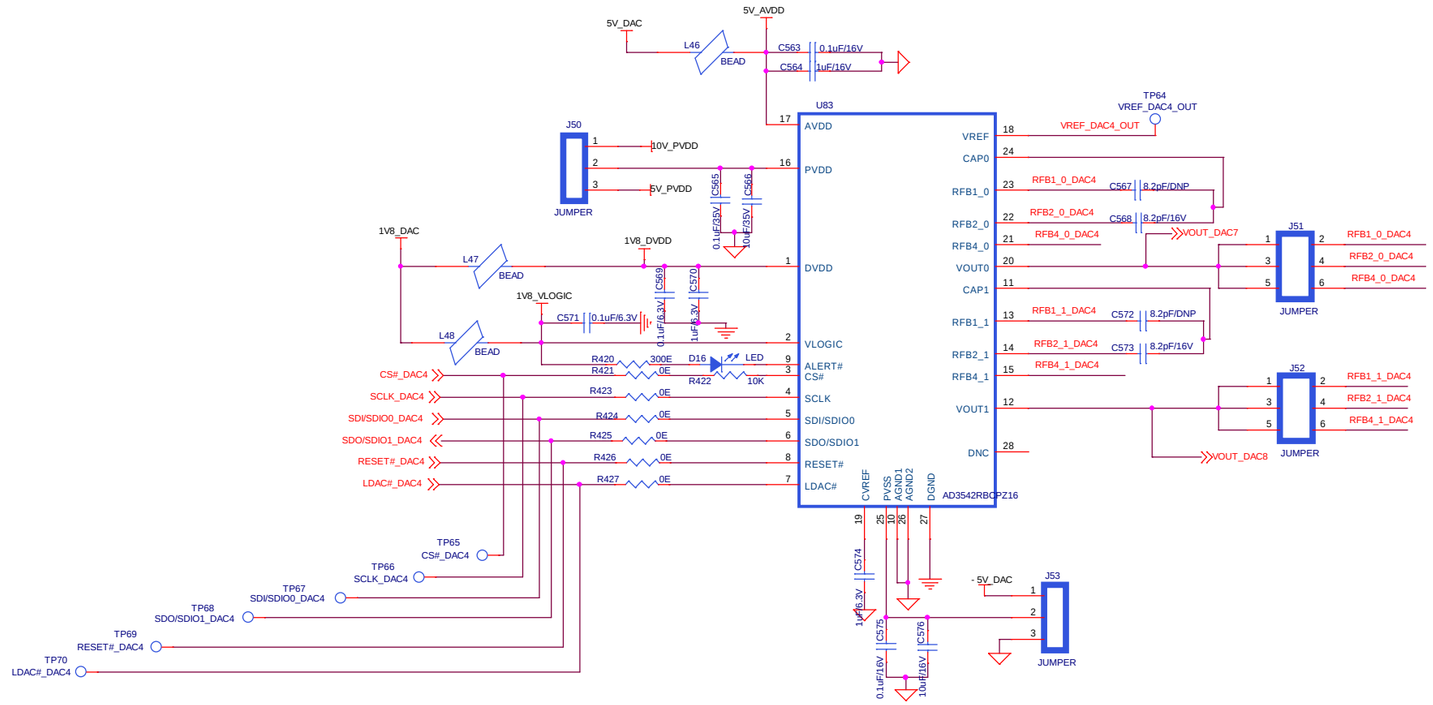


| | | | |
|---|---|---|---|
| DRN BY | <DRN BY> | EXPLORER ELECTRONICS<br>43/A, GOBINDA BASU LANE, HALISAHAR, KOLKATA, 743134, WEST BENGAL, INDIA. | |
| CHKD BY | <CHKD BY> | Title<br>INTEGRATED DATA ACQUISITION BOARD | |
| APPD BY | <APPD BY> | Size A2 | Document Number DAC2_3_4 | Rev ? |
| PROPRIETARY INFORMATION<br>NO DISSEMINATION OR USE ALLOWED WITHOUT PRIOR WRITTEN PERMISSION. | | Date: Friday, September 05, 2025 | Sheet 19 of 27 |

# PL PMOD 1

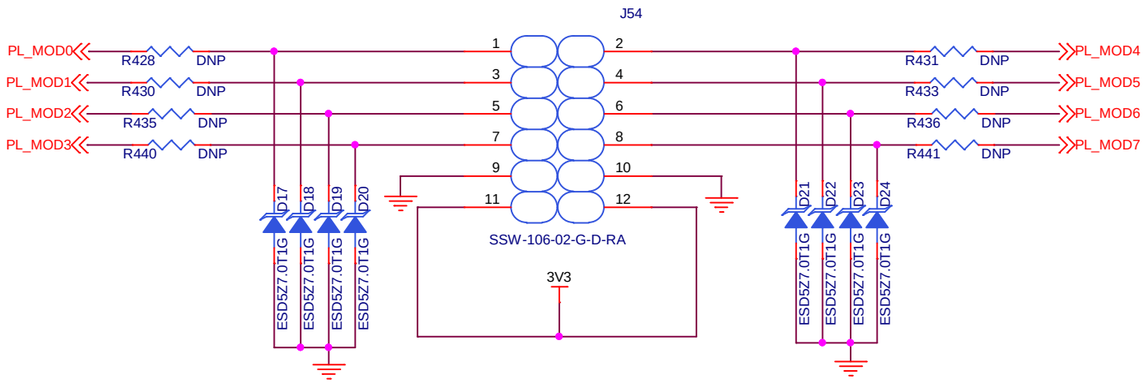


# PL PMOD 2

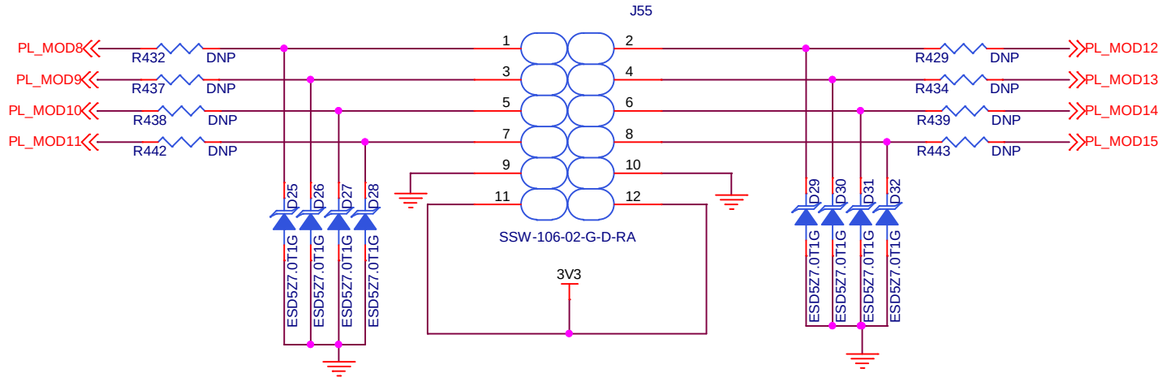


# QUAD CH DIGITAL (COUNTER)

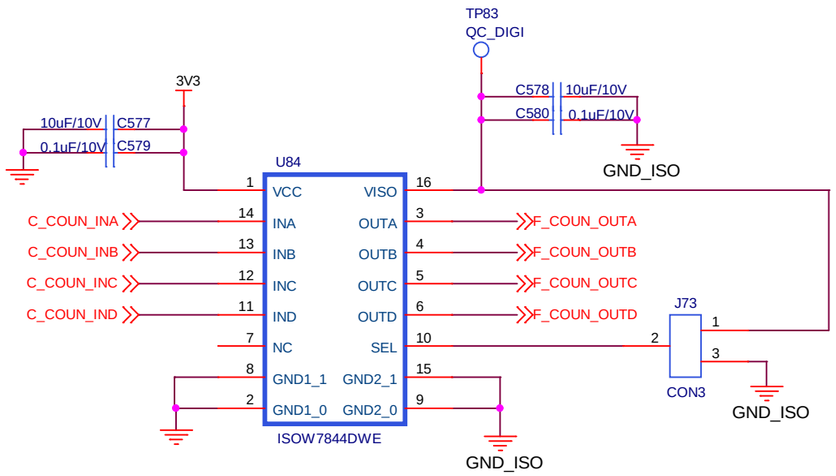


| | | |
|---|---|---|
| DRN BY | *<DRN BY>* | EXPLORER ELECTRONICS<br>43/A, GOBINDA BASU LANE, HALISAHAR, KOLKATA, 743134, WEST BENGAL, INDIA. |
| CHKD BY | *<CHKD BY>* | Title<br>INTEGRATED DATA ACQUISITION BOARD |
| APPD BY | *<APPD BY>* | Size A3 — Document Number PL_MOD & QUARD CH DIGITAL (COUNTER) — Rev ? |
| PROPRIETARY INFORMATION<br>*NO DISSEMINATION OR USE ALLOWED WITHOUT PRIOR WRITTEN PERMISSION.* | | Date: Friday, September 05, 2025 — Sheet 20 of 27 |

# RS - 422 ( DIFFERTENTIAL DIGITAL IN&OUT )

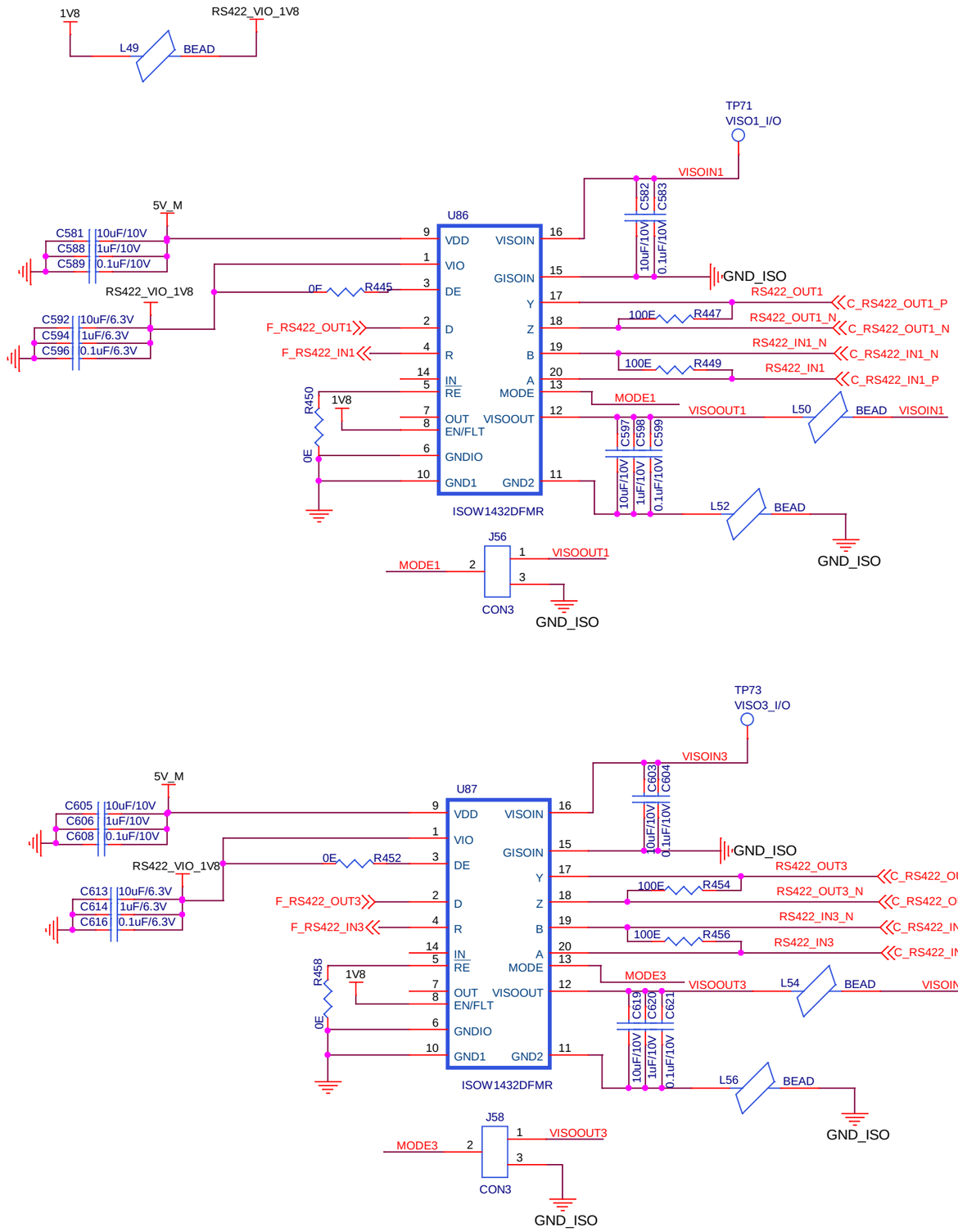


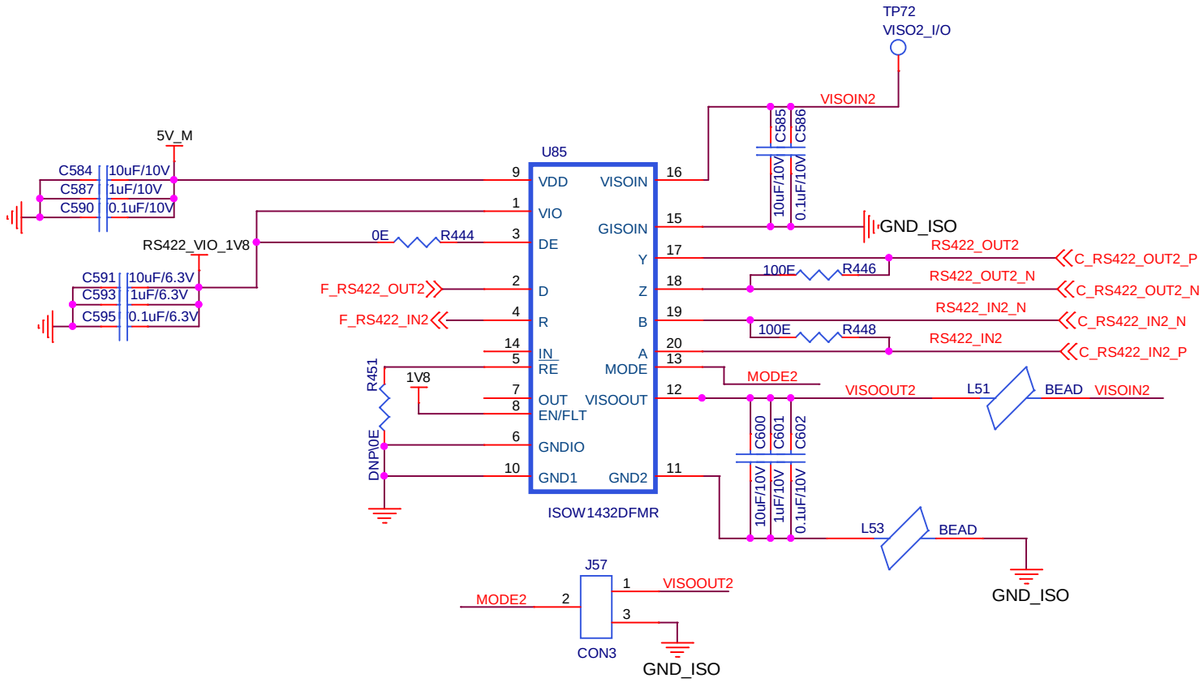





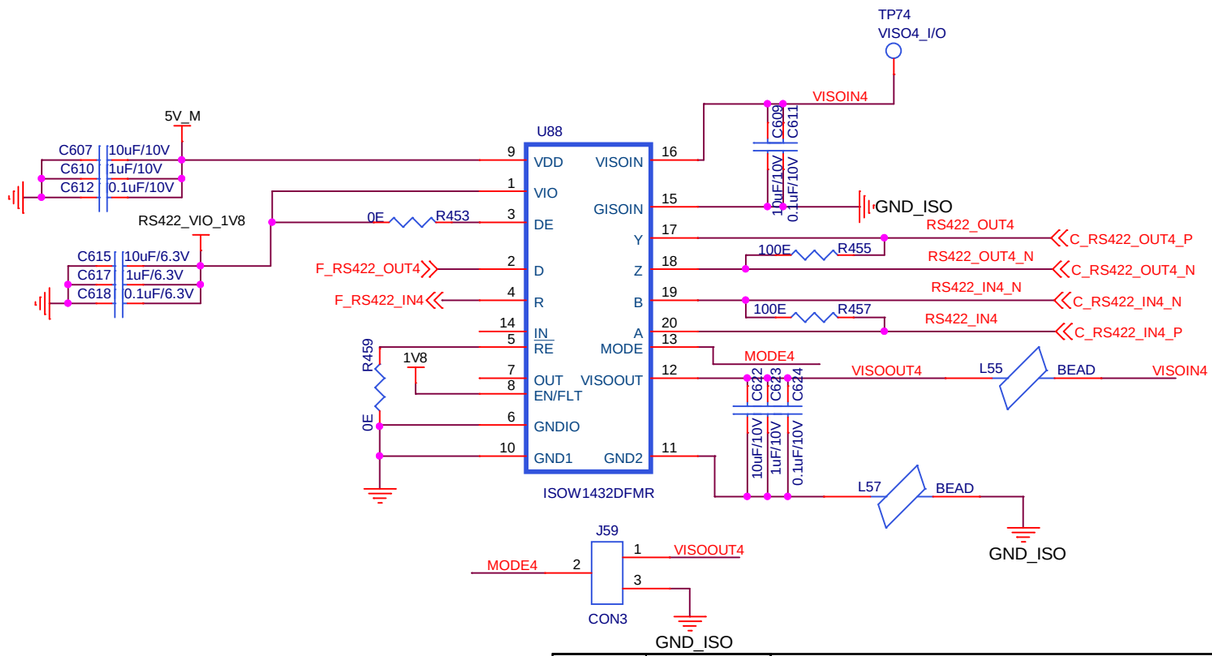


| | | |
|---|---|---|
| DRN BY | *<DRN BY>* | EXPLORER ELECTRONICS<br>43/A, GOBINDA BASU LANE, HALISAHAR,<br>KOLKATA, 743134, WEST BENGAL, INDIA. |
| CHKD BY | *<CHKD BY>* | Title<br>INTEGRATED DATA ACQUISITION BOARD |
| APPD BY | *<APPD BY>* | |
| PROPRIETARY INFORMATION<br>*NO DISSEMINATION OR USE ALLOWED WITHOUT PRIOR WRITTEN PERMISSION.* | | Size A3 · Document Number ISOW1432DFMR - RS-422 DIGITAL IN&OUT) · Rev ? |
| | | Date: Friday, September 05, 2025 · Sheet 21 of 27 |

# ISO DIGITAL INPUT

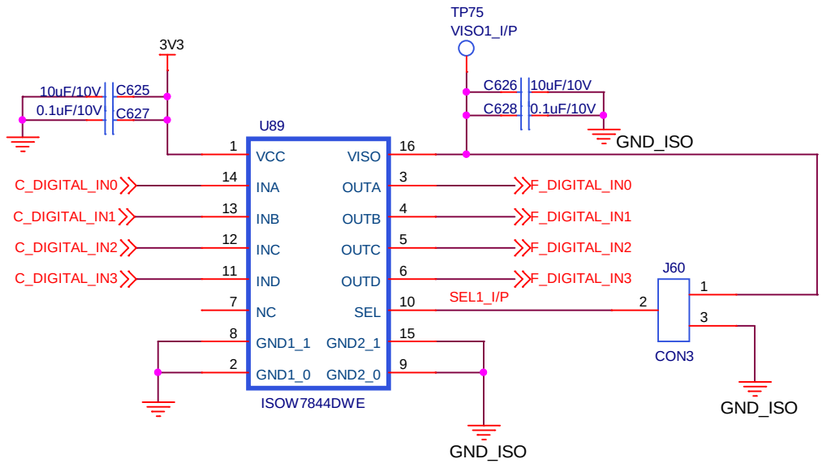


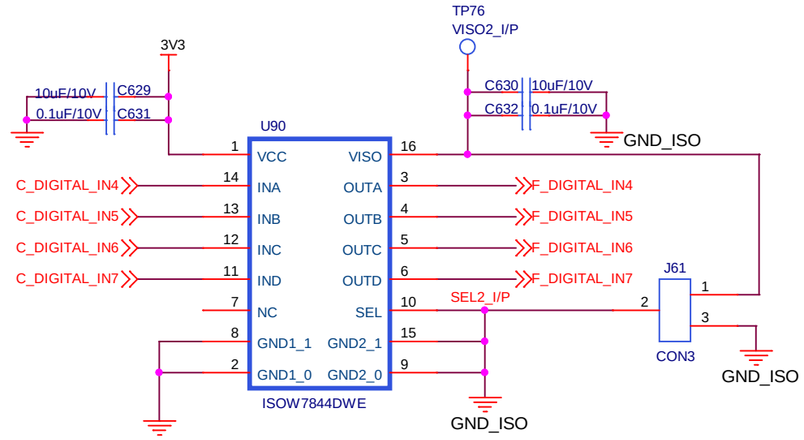


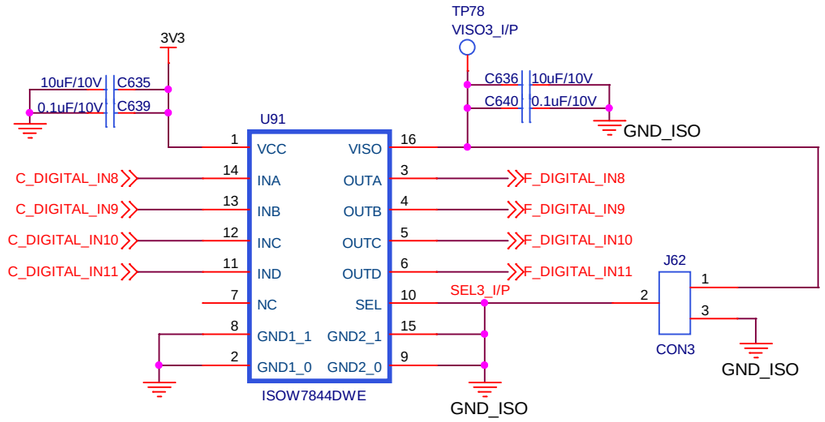


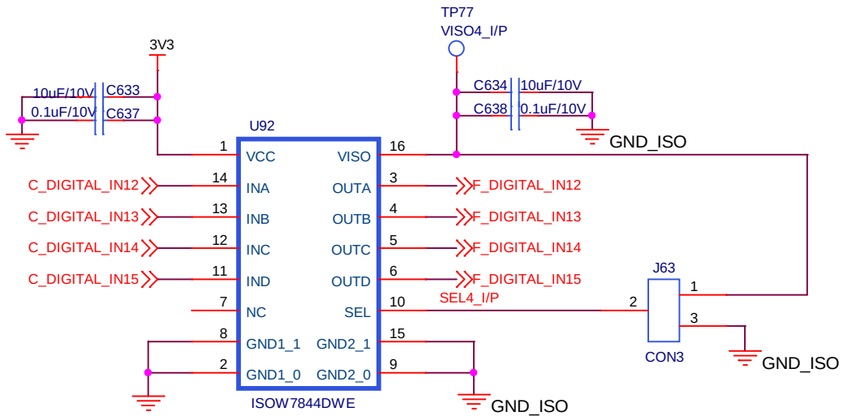


| | | |
|---|---|---|
| DRN BY | *<DRN BY>* | EXPLORER ELECTRONICS<br>43/A, GOBINDA BASU LANE, HALISAHAR,<br>KOLKATA, 743134, WEST BENGAL, INDIA. |
| CHKD BY | *<CHKD BY>* | Title<br>INTEGRATED DATA ACQUISITION BOARD |
| APPD BY | *<APPD BY>* | Size: A3 — Document Number: ISO DIGITAL INPUT — Rev: ? |
| PROPRIETARY INFORMATION<br>*NO DISSEMINATION OR USE ALLOWED WITHOUT PRIOR WRITTEN PERMISSION.* | | Date: Friday, September 05, 2025 — Sheet 22 of 27 |

# ISO DIGITAL OUT

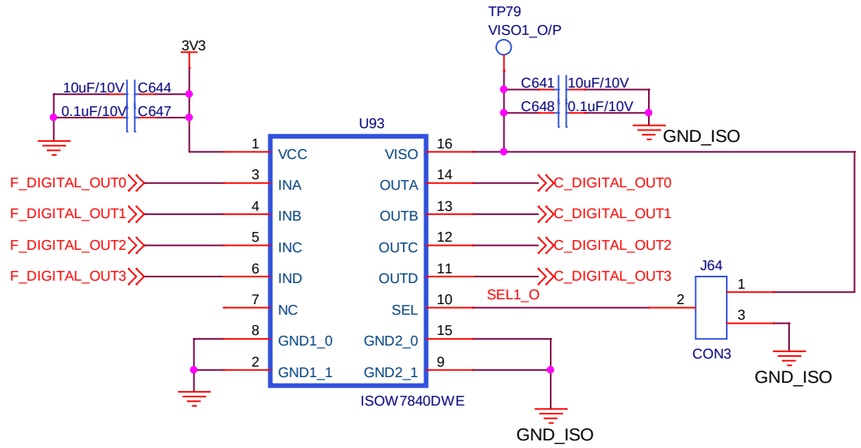


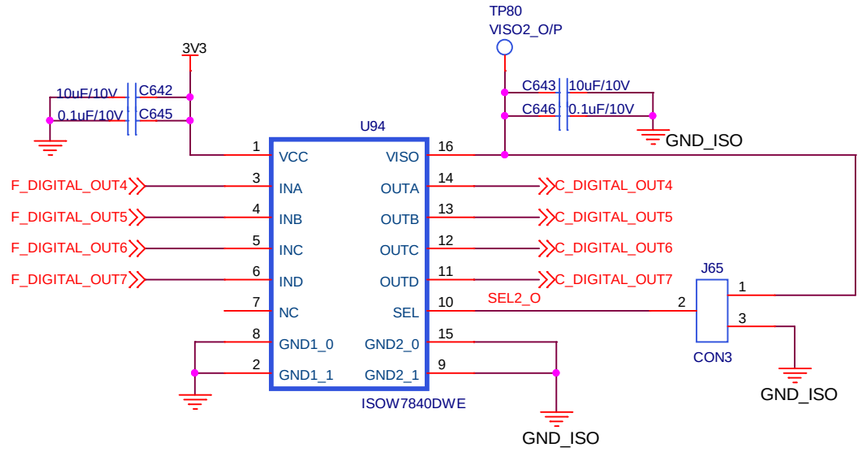


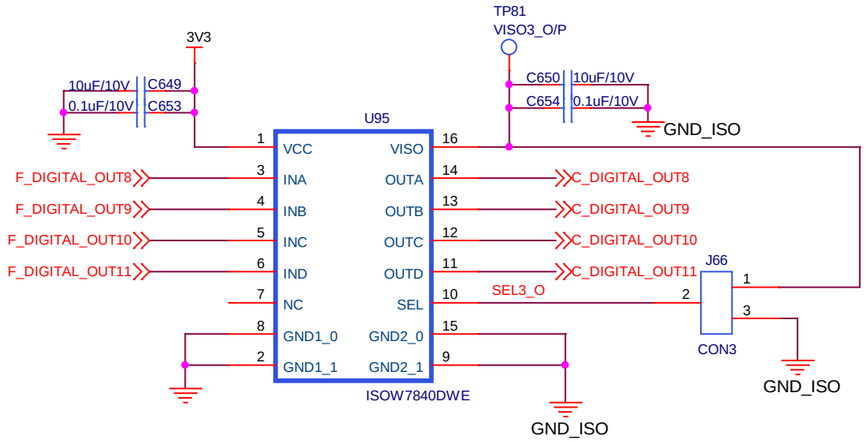


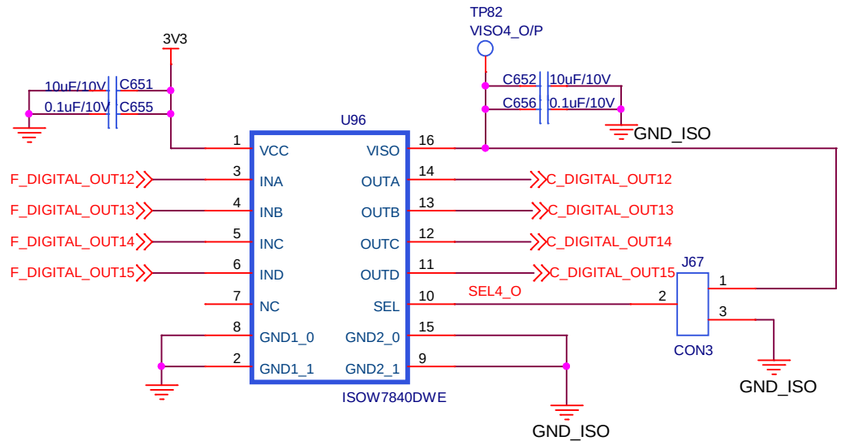


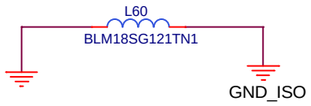


| | | |
|---|---|---|
| DRN BY | <DRN BY> | EXPLORER ELECTRONICS<br>43/A, GOBINDA BASU LANE, HALISAHAR,<br>KOLKATA, 743134, WEST BENGAL, INDIA. |
| CHKD BY | <CHKD BY> | Title<br>INTEGRATED DATA ACQUISITION BOARD |
| APPD BY | <APPD BY> | Size A3 — Document Number ISO DIGITAL OUT — Rev ? |
| PROPRIETARY INFORMATION<br>NO DISSEMINATION OR USE ALLOWED WITHOUT PRIOR WRITTEN PERMISSION. | | Date: Friday, September 05, 2025 — Sheet 23 of 27 |

# GPIO LEDS

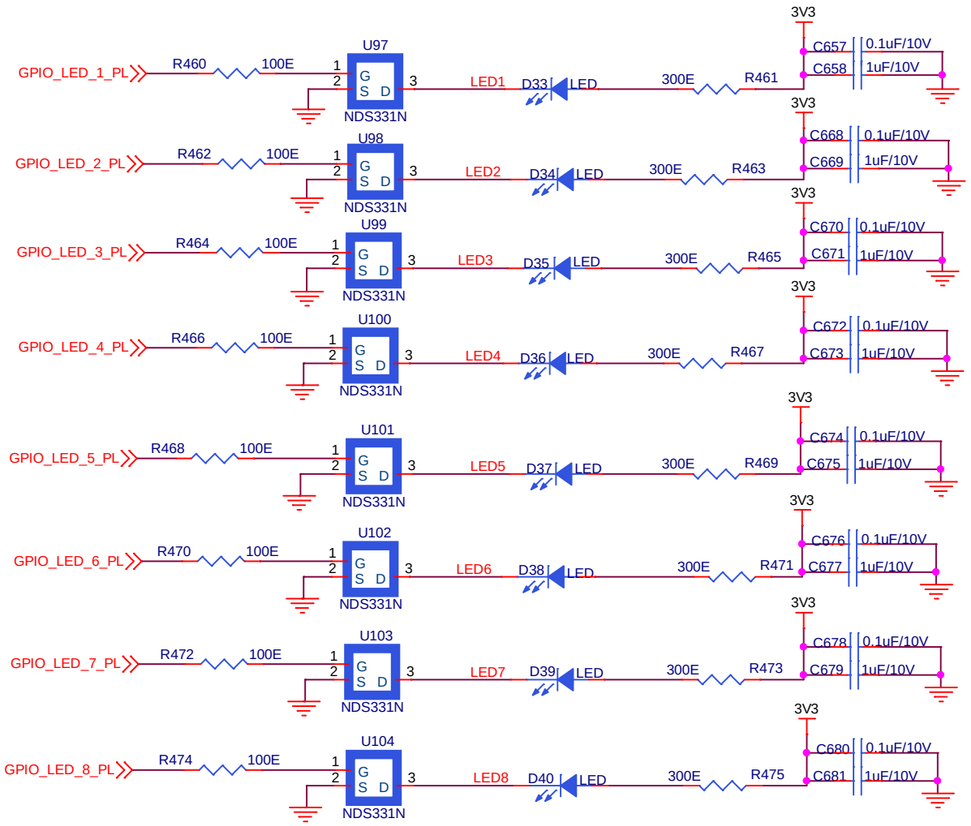


# BANK-35

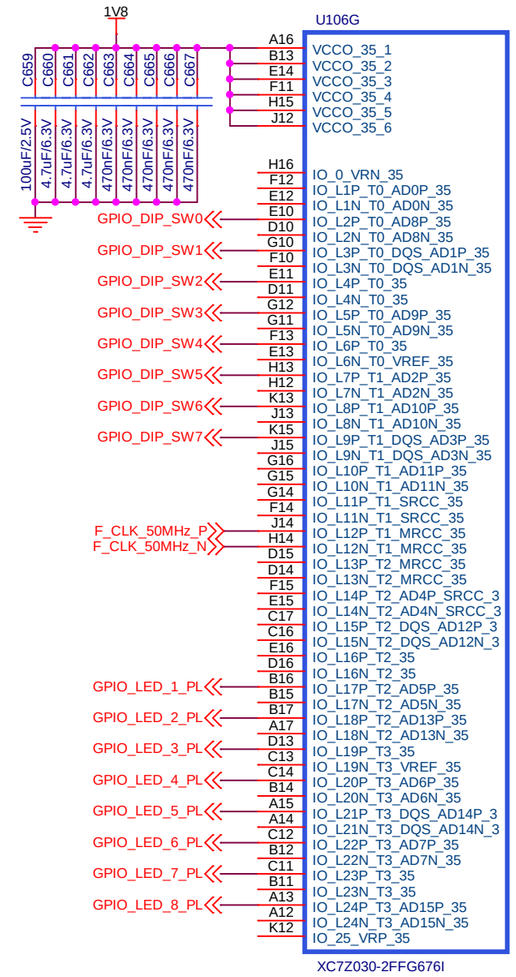


# DIP SWITCH

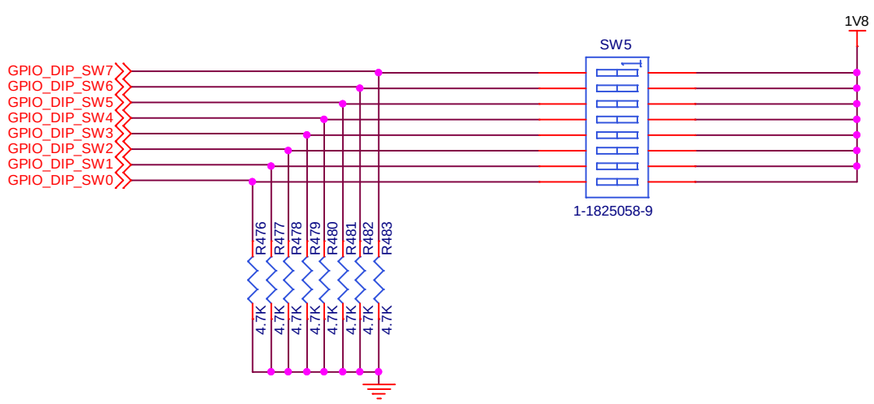


# PL 50MHz CLOCK

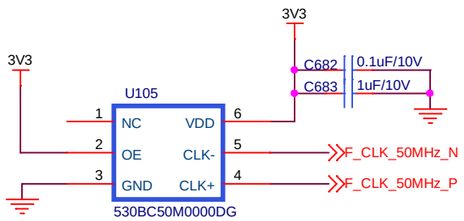


| | | |
|---|---|---|
| DRN BY | <DRN BY> | EXPLORER ELECTRONICS 43/A, GOBINDA BASU LANE, HALISAHAR, KOLKATA, 743134, WEST BENGAL, INDIA. |
| CHKD BY | <CHKD BY> | Title: INTEGRATED DATA ACQUISITION BOARD |
| APPD BY | <APPD BY> | Size: A3 — Document Number: GPIO_LED_CLOCK & BANK 35 — Rev: ? |
| PROPRIETARY INFORMATION. NO DISSEMINATION OR USE ALLOWED WITHOUT PRIOR WRITTEN PERMISSION. | | Date: Friday, September 05, 2025 — Sheet 24 of 27 |

# BANK-13

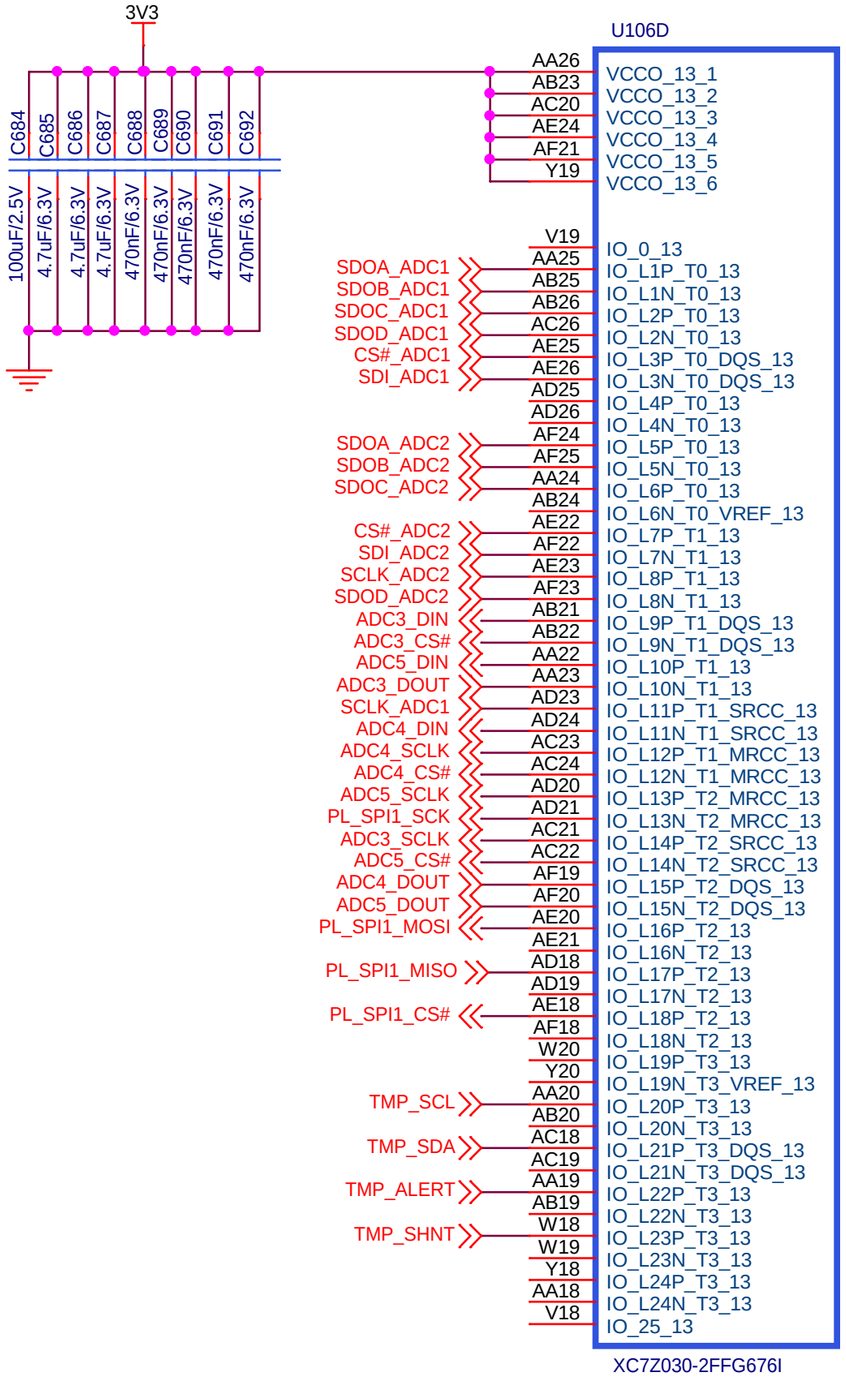


# BANK-12

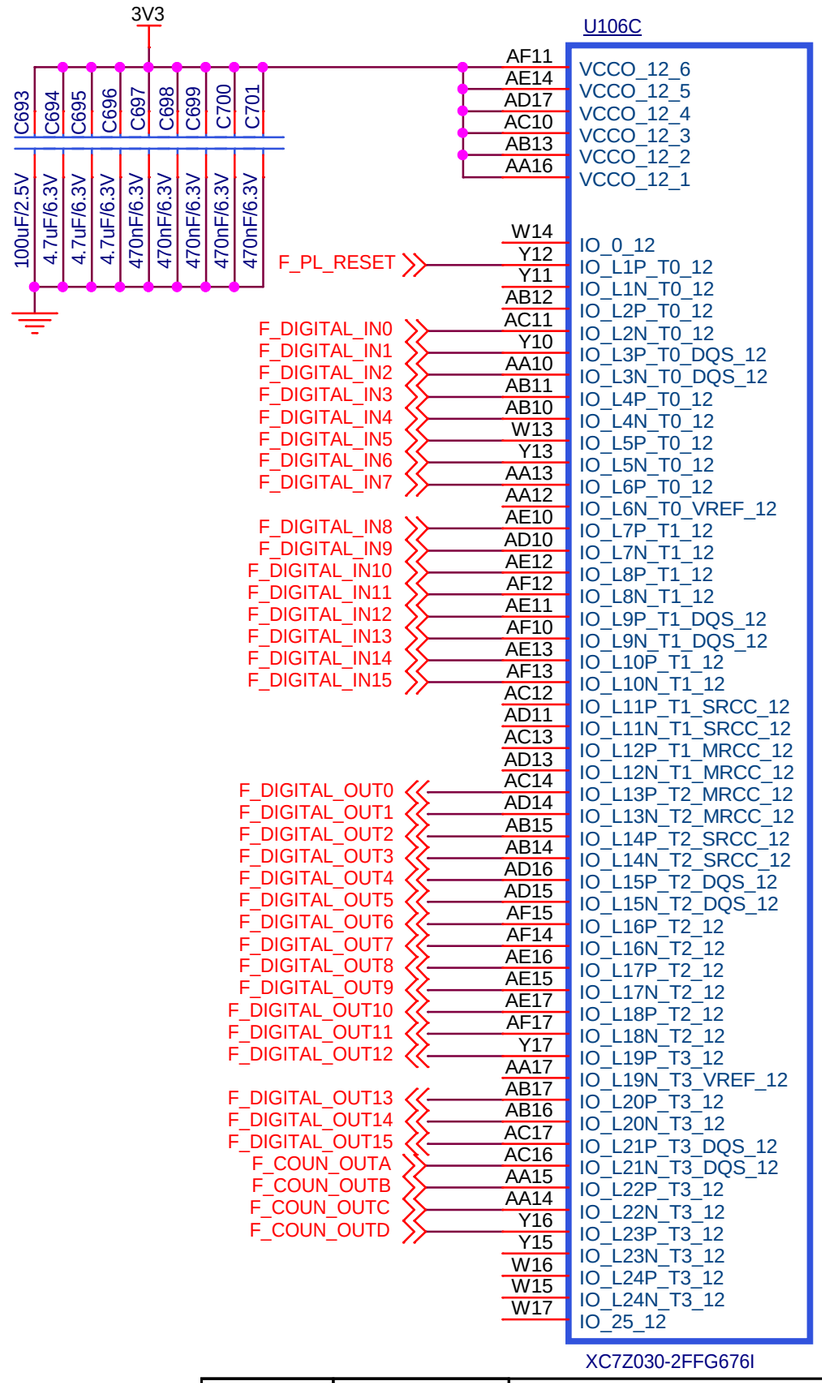


| | | |
|---|---|---|
| DRN BY | *<DRN BY>* | EXPLORER ELECTRONICS<br>43/A, GOBINDA BASU LANE, HALISAHAR,<br>KOLKATA, 743134, WEST BENGAL, INDIA. |
| CHKD BY | *<CHKD BY>* | Title<br>INTEGRATED DATA ACQUISITION BOARD |
| APPD BY | *<APPD BY>* | Size A4 · Document Number BANK_12 & 13 · Rev ? |
| **PROPRIETARY INFORMATION**<br>*NO DISSEMINATION OR USE ALLOWED WITHOUT PRIOR WRITTEN PERMISSION.* | | Date: Friday, September 05, 2025 · Sheet 25 of 27 |

# BANK-33

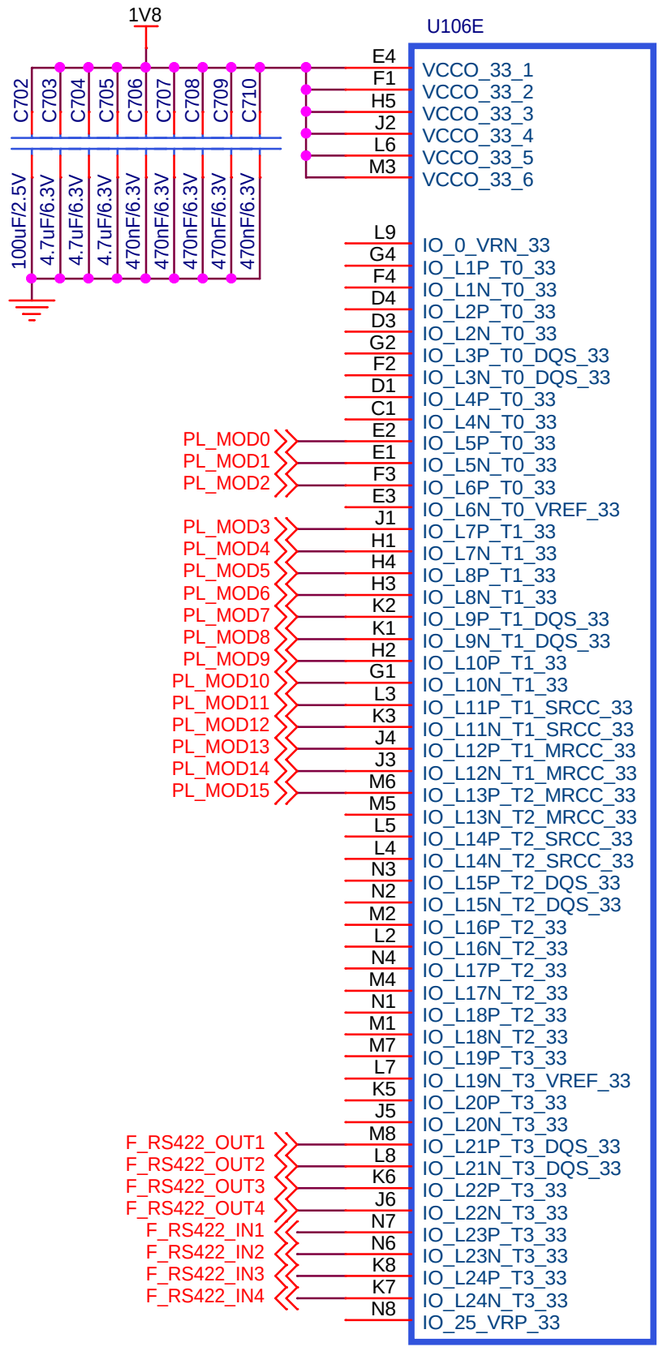


# BANK-34

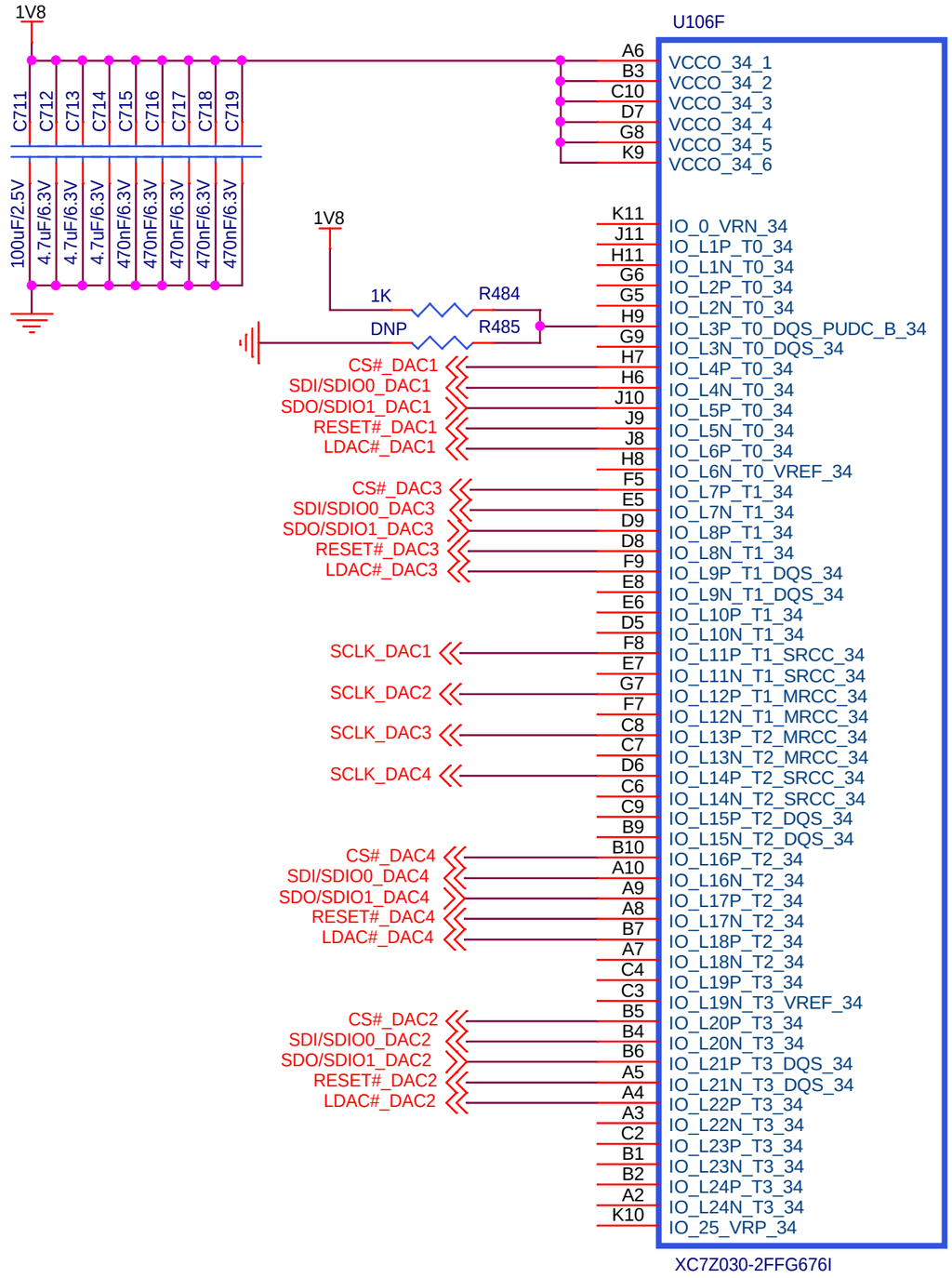


| | | |
|---|---|---|
| DRN BY | *<DRN BY>* | EXPLORER ELECTRONICS<br>43/A, GOBINDA BASU LANE, HALISAHAR,<br>KOLKATA, 743134, WEST BENGAL, INDIA. |
| CHKD BY | *<CHKD BY>* | Title<br>INTEGRATED DATA ACQUISITION BOARD |
| APPD BY | *<APPD BY>* | Size A4 · Document Number BANK_33 & 34 · Rev ? |
| **PROPRIETARY INFORMATION** | | Date: Friday, September 05, 2025 · Sheet 26 of 27 |

*NO DISSEMINATION OR USE ALLOWED WITHOUT PRIOR WRITTEN PERMISSION.*

# CONNECTORS DETAILS

## ADC IN CONNECTOR

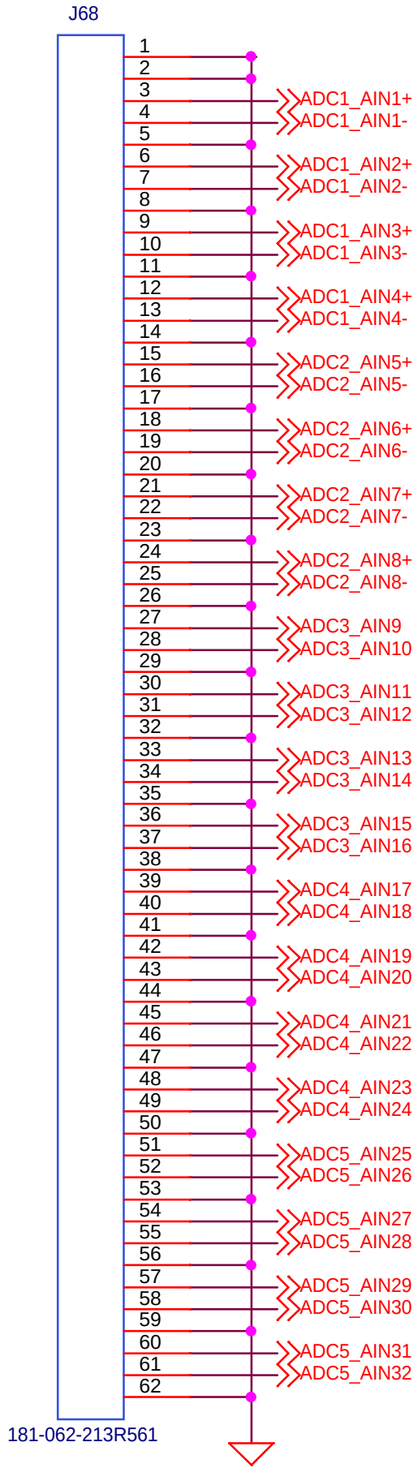


## DAC OUTPUT CONNECTOR

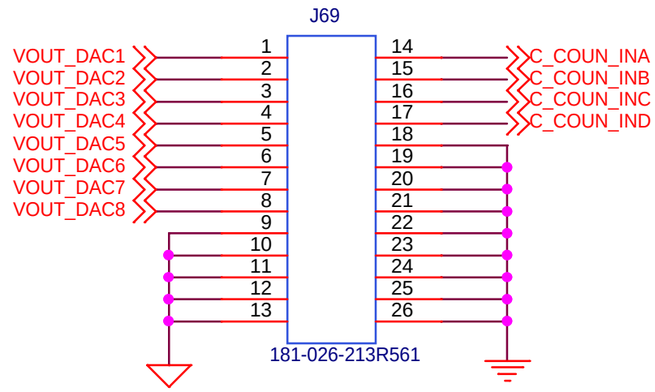


## RS422 OUTPUT CONNECTOR

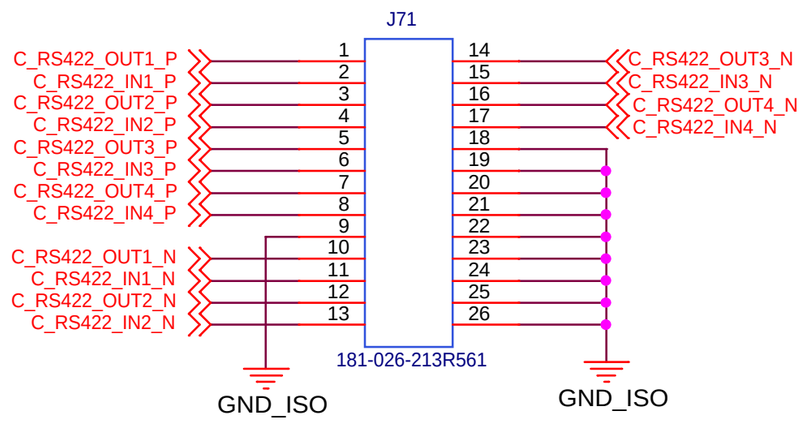


## POWER SUPPLY CONNECTOR

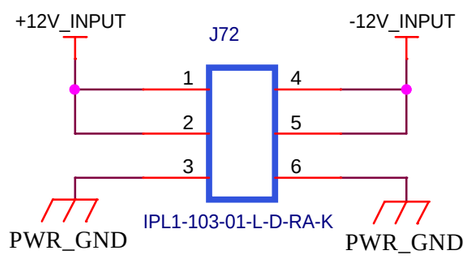


## DIGITAL INPUTS AND OUTPUTS

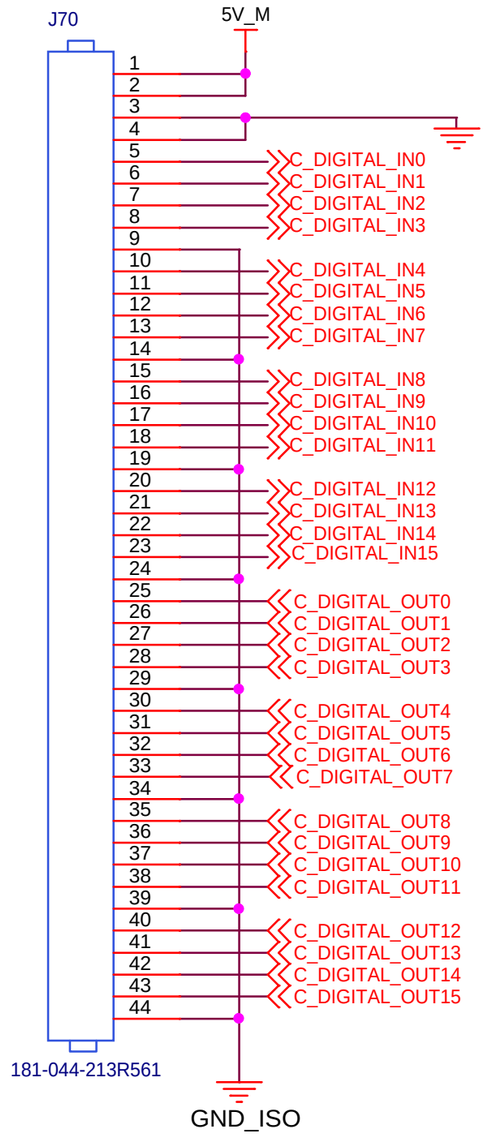


| | | |
|---|---|---|
| DRN BY | *<DRN BY>* | EXPLORER ELECTRONICS<br>43/A, GOBINDA BASU LANE, HALISAHAR, KOLKATA, 743134, WEST BENGAL, INDIA. |
| CHKD BY | *<CHKD BY>* | Title<br>INTEGRATED DATA ACQUISITION BOARD |
| APPD BY | *<APPD BY>* | Size A4 · Document Number CONNECTORS · Rev ? |
| **PROPRIETARY INFORMATION** | | Date: Friday, September 05, 2025 · Sheet 27 of 27 |

*NO DISSEMINATION OR USE ALLOWED WITHOUT PRIOR WRITTEN PERMISSION.*