BLOCK_DIAGRAM_OF_INTEGRATED_DATA_ACQUISITION_BOARD

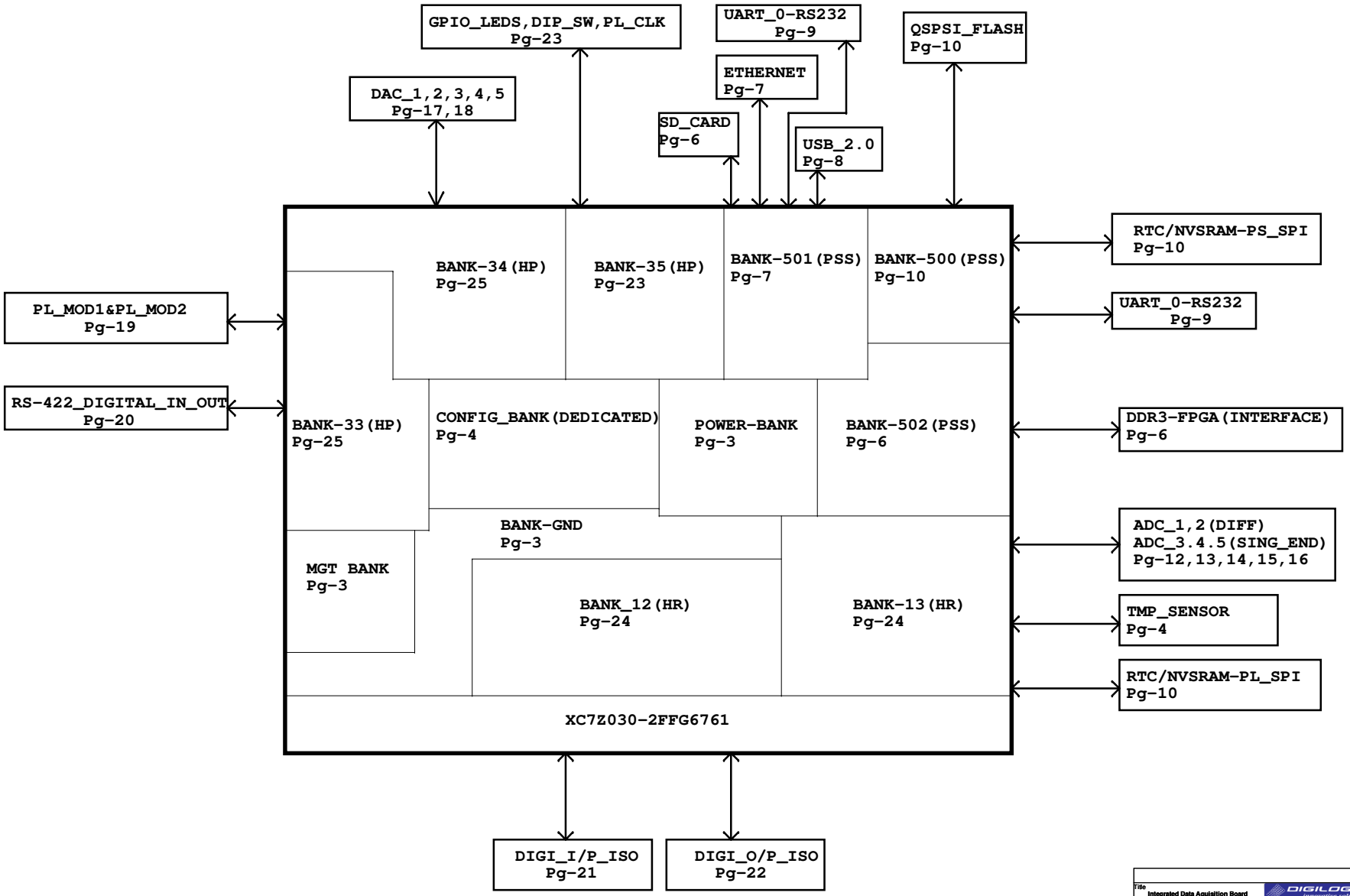

Title	Integrated Data Aqusition Board	DIGILOGIC innovative solutions	
Size C	Document Number	IDAQ_BLOCK_DIAGRAM	Rev ?
Date:	Monday, October 27, 2025	Sheet 1 of 26	

POWER SUPPLY

POWER SEQUENCING CIRCUIT

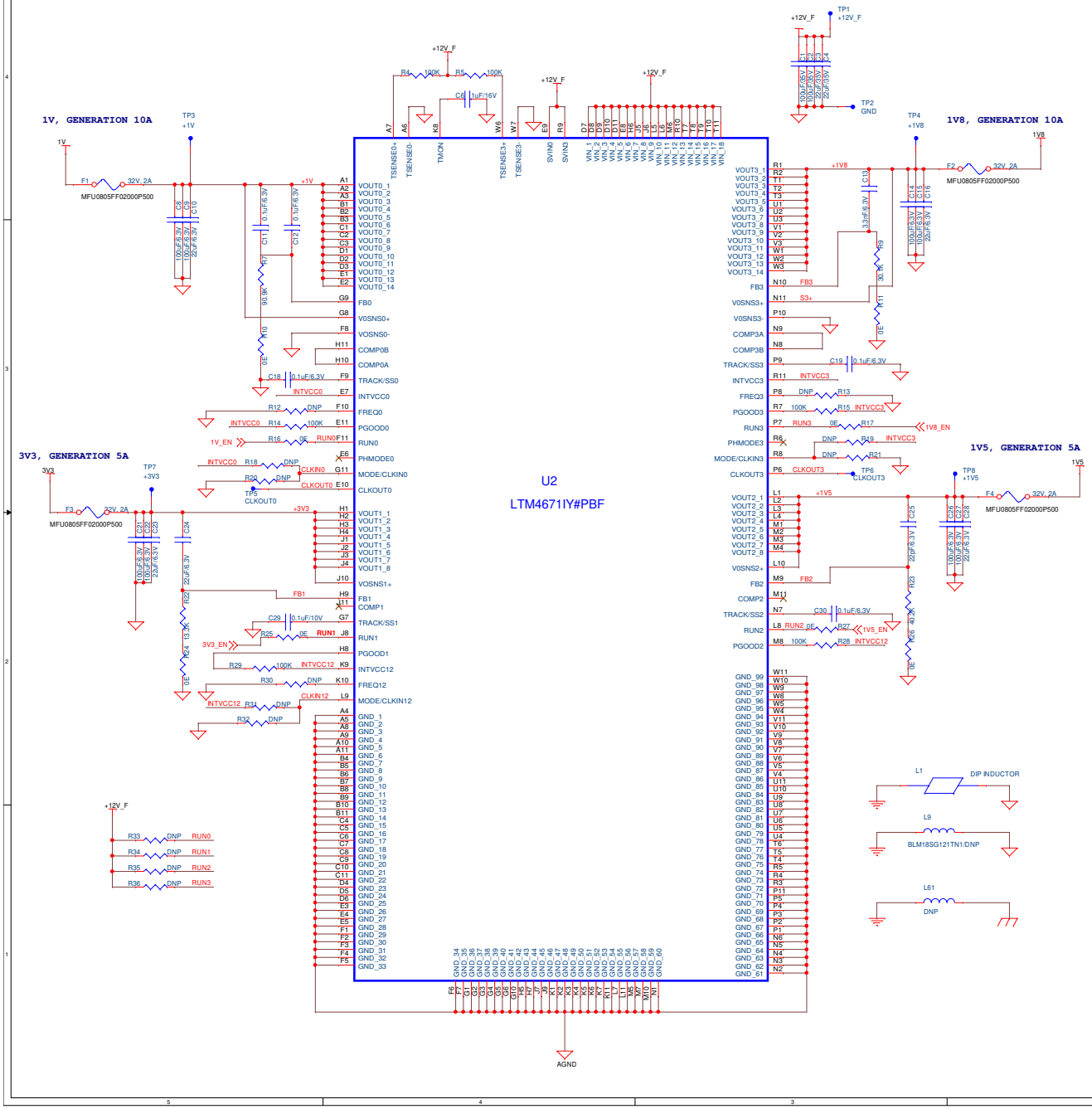

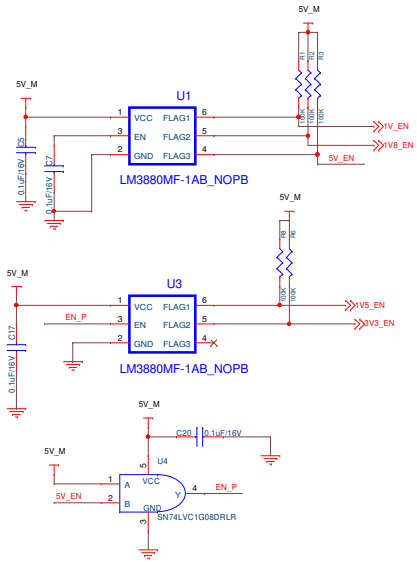

5V DIGITAL

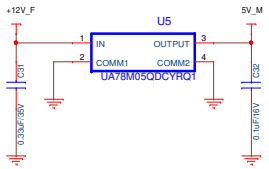

COMMON MODE CHOKE

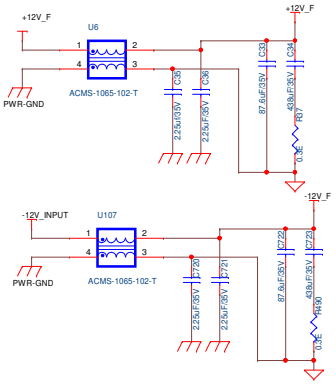

Title	Integrated Data Aquisition Board		
Size C	Document Number	Power_Generation	Rev ?
Date: Monday, October 27, 2025	Sheet 2 of 26		

FPGA POWER BANK

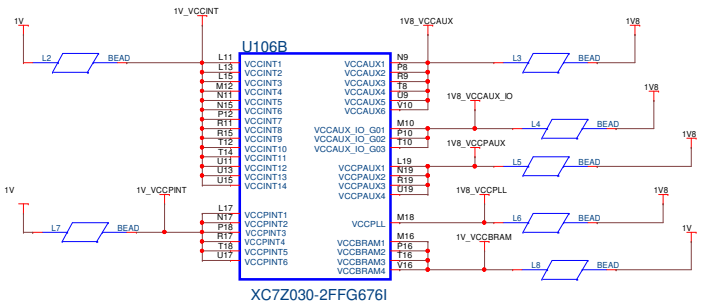

FPGA POWER BANK – DECOUPLING CAPACITORS

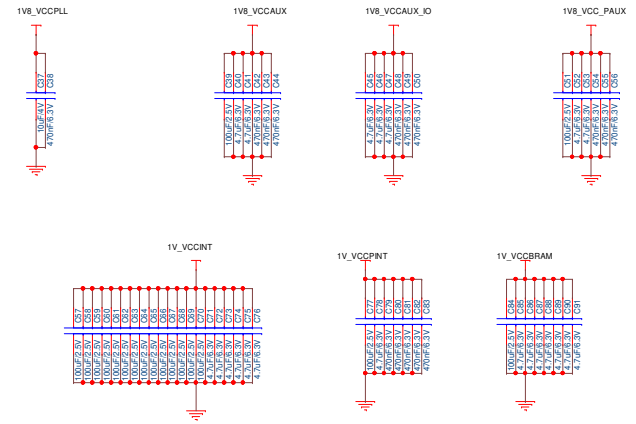

FPGA GROUND BANK

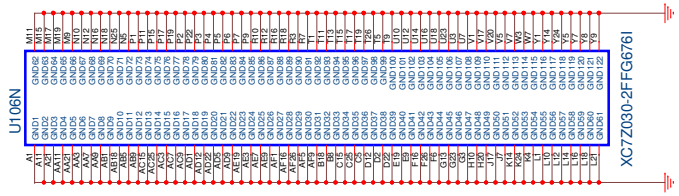

FPGA UNUSED MGT BANK

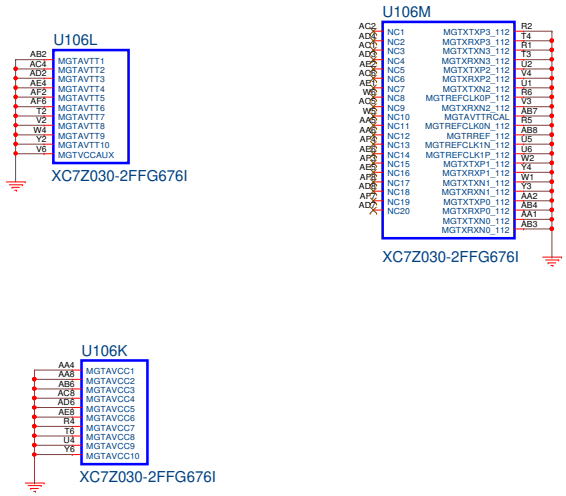

Title	Integrated Data Aquisition Board	DIGILOGIC innovative solutions	
Size C	Document Number	DECOUPLING&GND_BANK	Rev ?
Date: Monday, October 27, 2025	Sheet 3 of 26		

PROCESSOR CLOCK

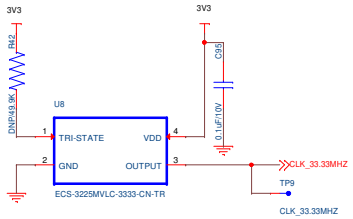

POWER ON RESET

FOR CDLY1, CDLY2, CRESET
INTERNAL DELAY OF 140 ms
WILL ALWAYS BE THERE .

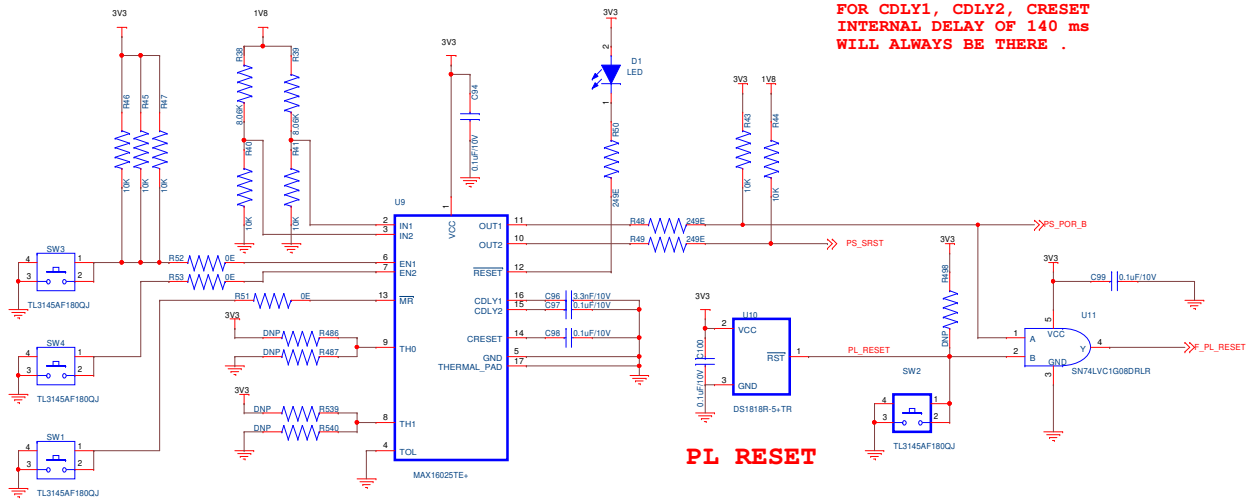

PL RESET

CONFIGURATION BANK (BANK 0)

JTAG

KEY NOTE:

VCCBAT_0
HAVE PULL_UP OR PULL_DOWN OPTION

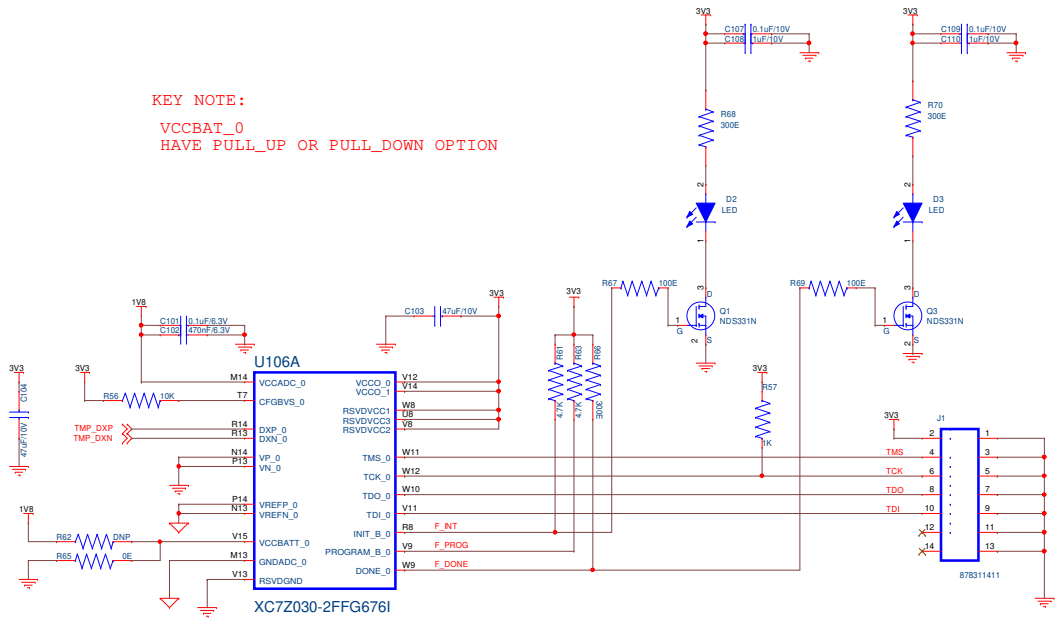

TEMPERATURE SENSOR

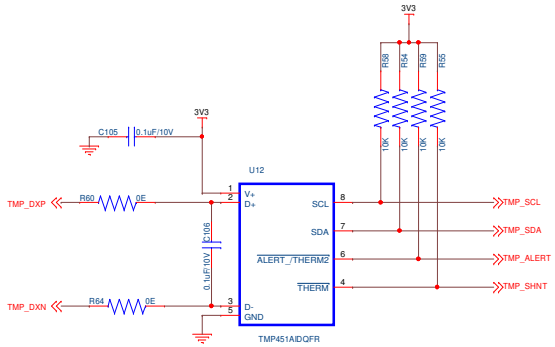

Title	Integrated Data Aquisition Board		
Size C	Document Number	PSCLK_POR_CFGBNK_TMPSNR	Rev ?
Date: Monday, October 27, 2025	Sheet 4 of 26		

DDR3-8GB - 32-BIT MEMORY

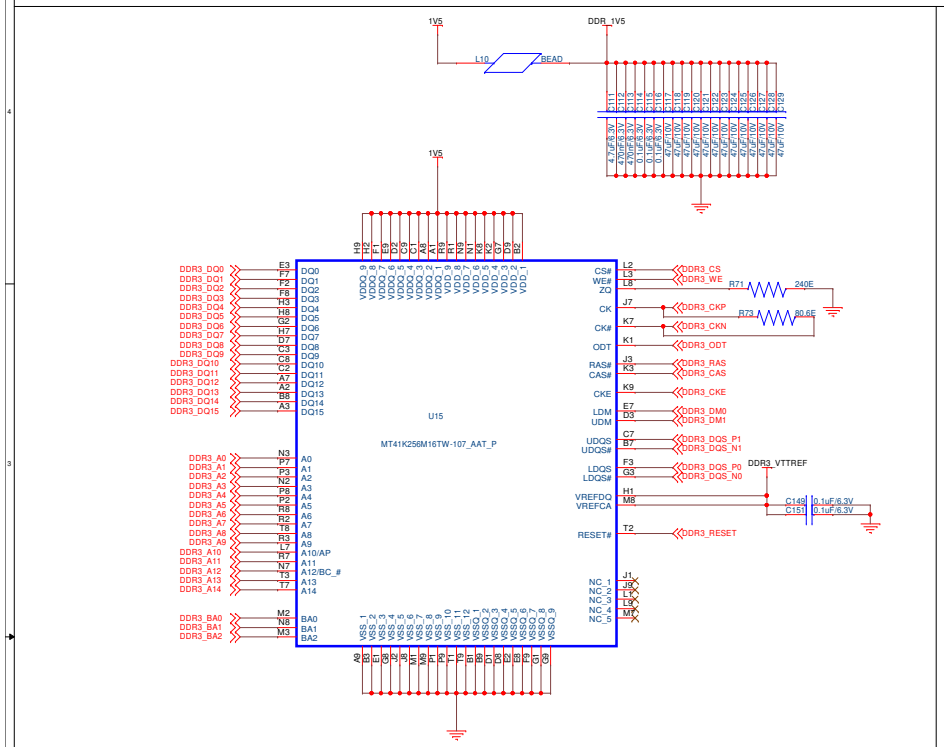

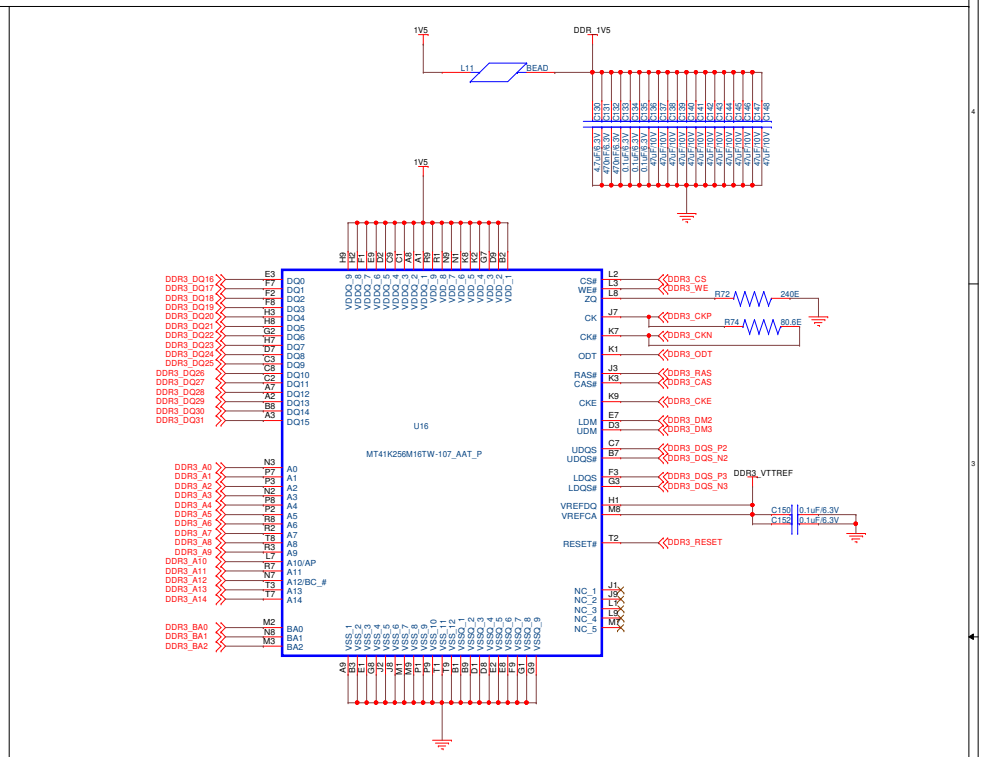

DDR3 TERMINATION & REFERENCE SUPPLY

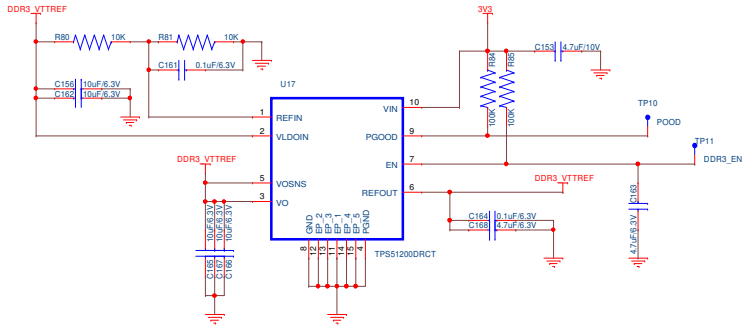

DDR3 TERMINATION RESISTORS

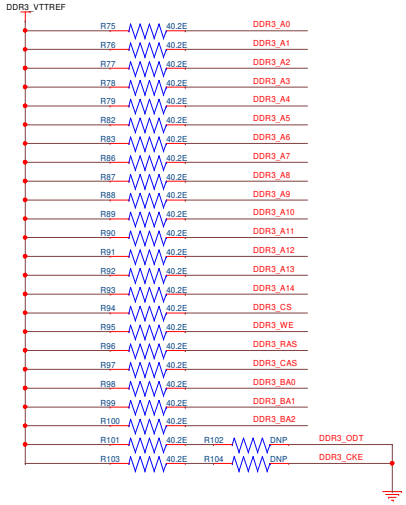

Title	Integrated Data Aquisition Board	DIGILOGIC innovative solutions	
Size C	Document Number DDR3		Rev ?
Date: Monday, October 27, 2025	Sheet 5 of 26		

DDR3 - FPGA INTERFACE-BANK-502

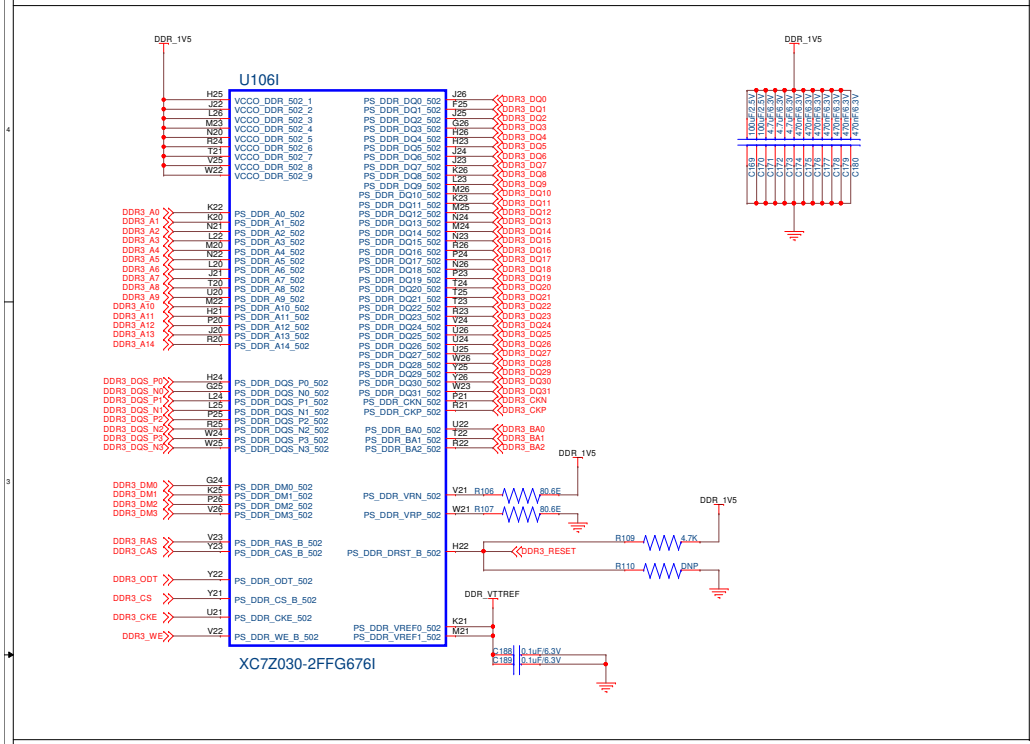

MIO_BANK_501

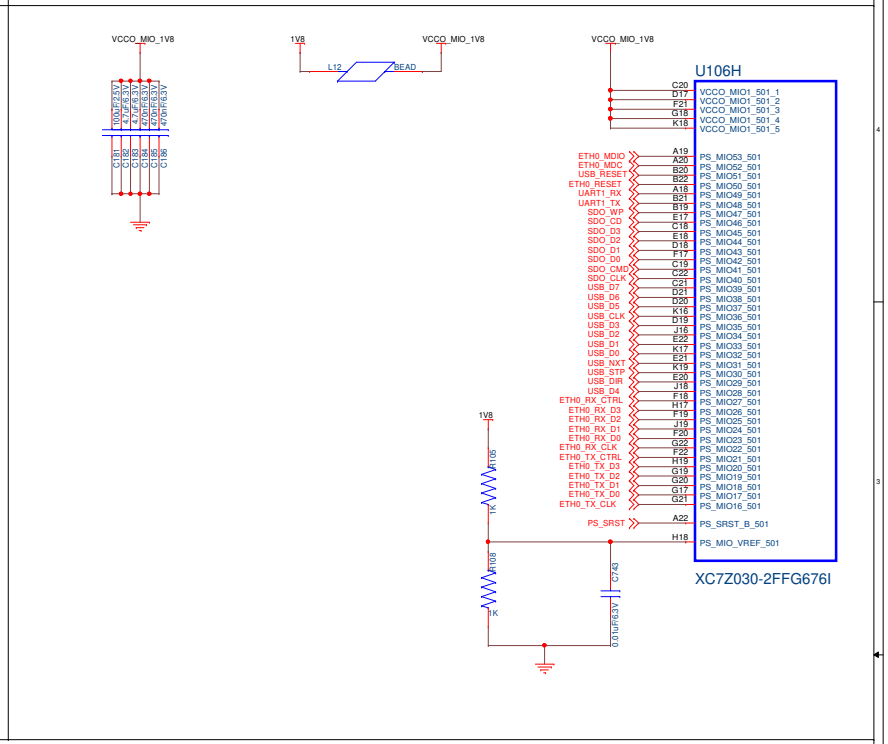

SD_CARD

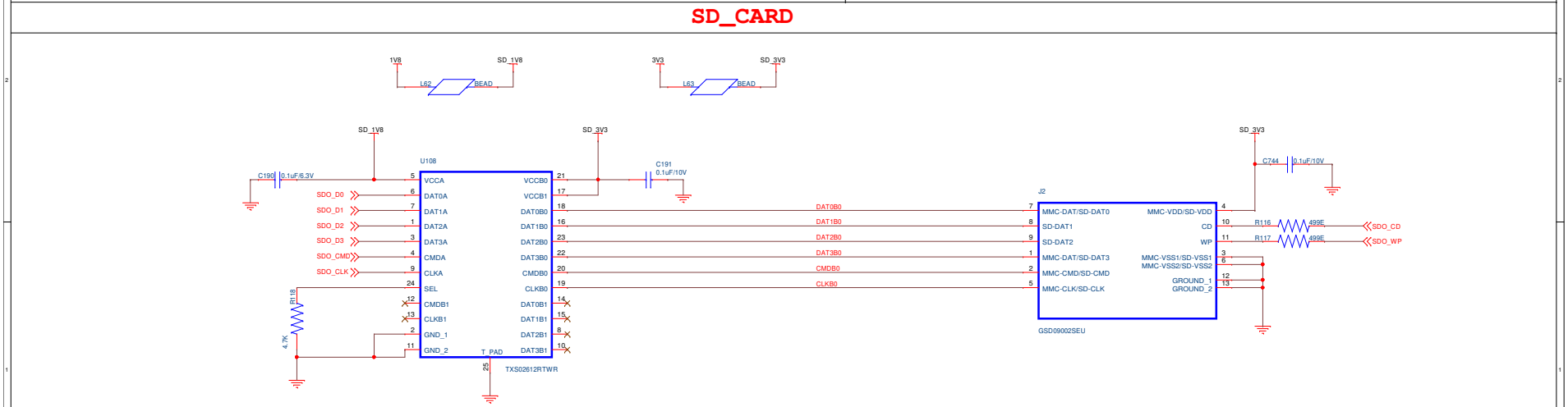

Title	Integrated Data Aquisition Board		
Size C	Document Number	SD_CARD_PSS_BANK	Rev ?
Date: Monday, October 27, 2025	Sheet 6 of 26		

88E1512-A0-NNP2I000 - ETHERNET_PHY CHIP 10/100/1000 MBPS

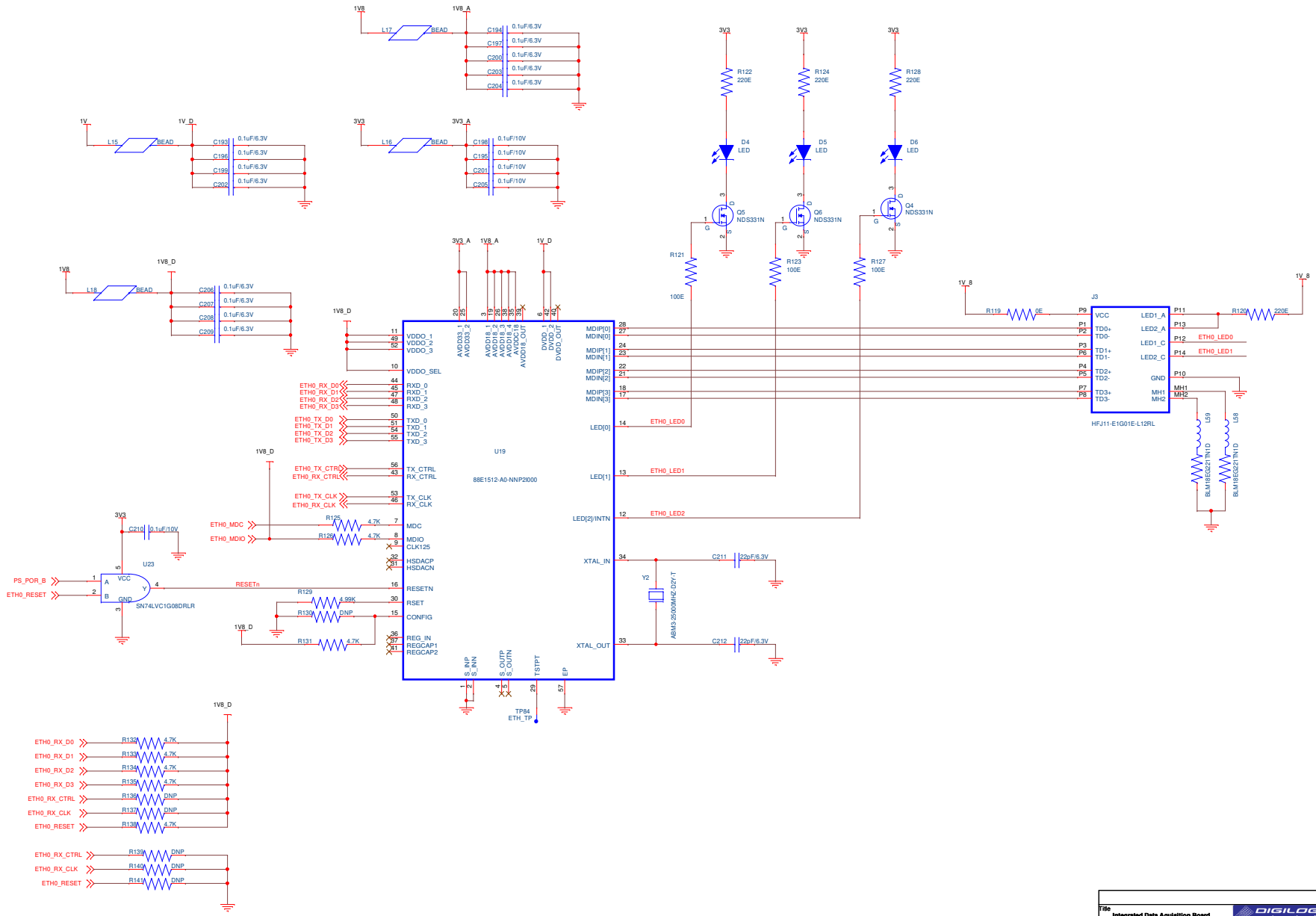

Title	Integrated Data Aquisition Board	DIGILOGIC innovative solutions	
Size C	Document Number	Ethernet	Rev ?
Date:	Monday, October 27, 2025	Sheet 7 of 26	

USB 2.0 INFORMATION

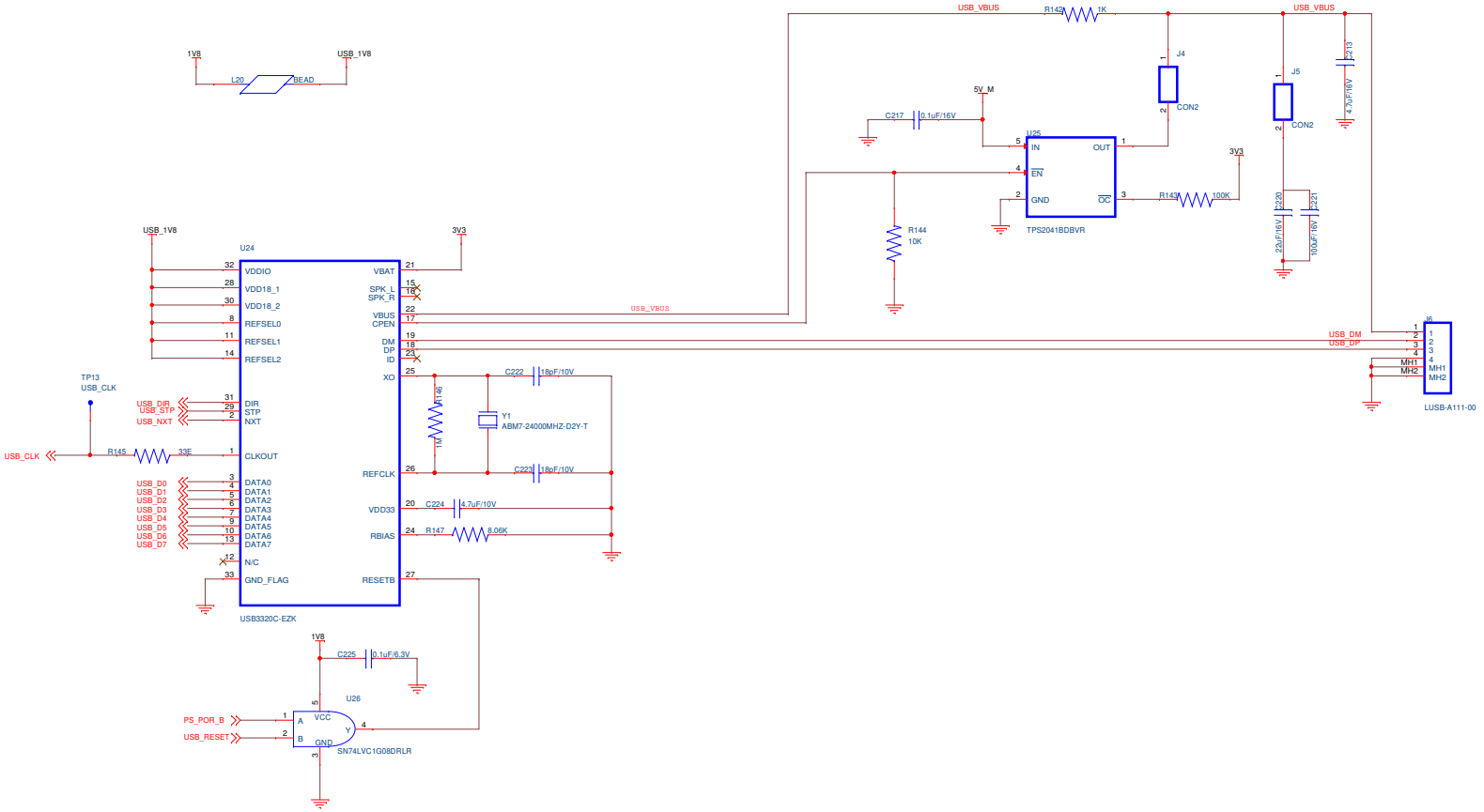

Title	Integrated Data Aquisition Board		
Size C	Document Number	USB_2.0	Rev ?
Date:	Monday, October 27, 2025	Sheet 8 of 26	

UART_0-RS232

UART_1-RS422

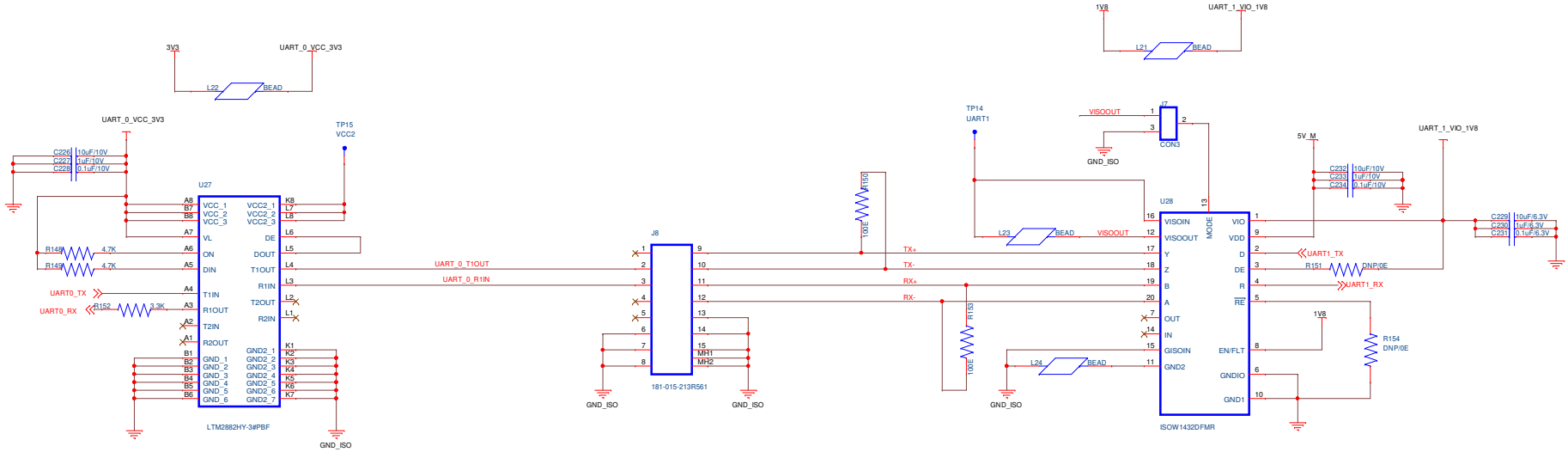

Title	Integrated Data Aquisition Board	DIGILOGIC innovative solutions	
Size C	Document Number UART_1_2		Rev ?
Date: Monday, October 27, 2025	Sheet 9 of 26		

RTC/NVSRAM

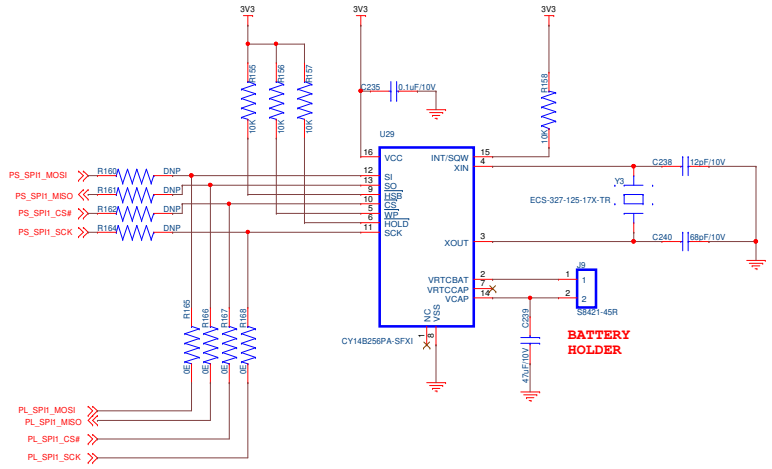

QSPI_FLASH-512Mb

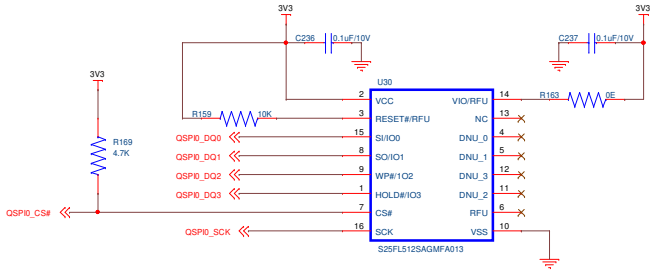

BOOT_MODE_SELECTION_SWITCH

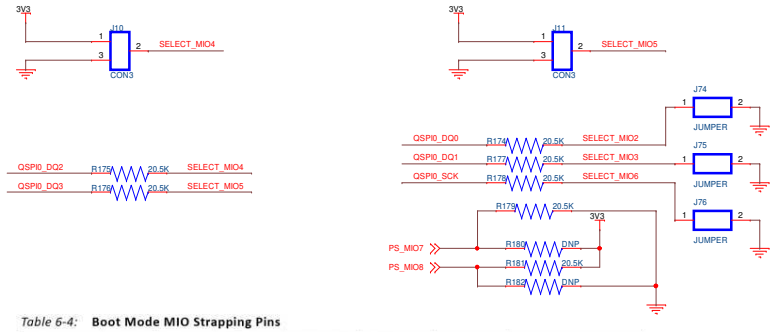

Table 6-4: **Boot Mode MIO Strapping Pins**

Pin-signal / Mode	MIO[8]	MIO[7]	MIO[6]	MIO[5]	MIO[4]	MIO[3]	MIO[2]
	VMODE[1]	VMODE[0]	BOOT_MODE[4]	BOOT_MODE[0]	BOOT_MODE[2]	BOOT_MODE[1]	BOOT_MODE[3]
Boot Devices							
JTAG Boot Mode; cascaded is most common(1)				0	0	0	**JTAG Chain Routing(2)** 0: Cascade mode 1: Independent mode
NOR Boot(3)				0	0	1	
NAND				0	1	0	
Quad-SPI(3)				1	0	0	
SD Card				1	1	0	
Mode for all 3 PLLs							
PLL Enabled			0	Hardware waits for PLL to lock, then executes BootROM.			
PLL Bypassed			1	Allows for a wide PS_CLK frequency range.			
MIO Bank Voltage(4)							
	Bank 1	**Bank 0**	Voltage Bank 0 includes MIO pins 0 thru 15. Voltage Bank 1 includes MIO pins 16 thru 53.				
2.5 V, 3.3 V	0	0					
1.8 V	1	1					

PS-MIO_BANK_500

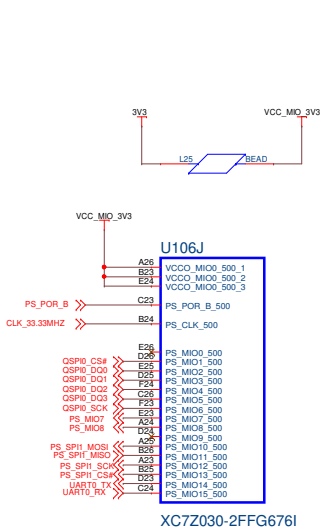

Title	Integrated Data Aquisition Board	DIGILOGIC innovative solutions	
Size C	Document Number	RTC_QSPI_MIO500_BMS	Rev ?
Date:	Monday, October 27, 2025	Sheet 10 of 26	

+5V GENERATION

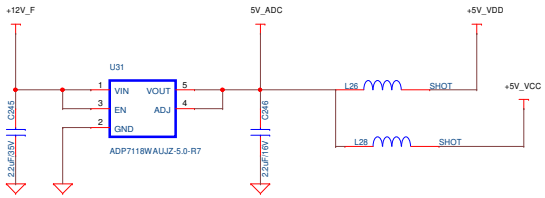

-5V GENERATION

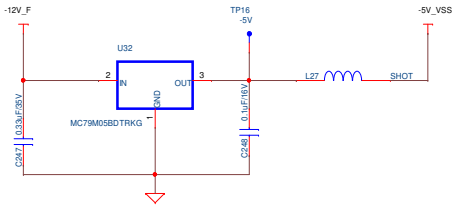

+10V GENERATION

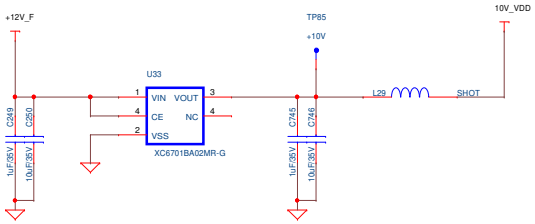

-10V GENERATION

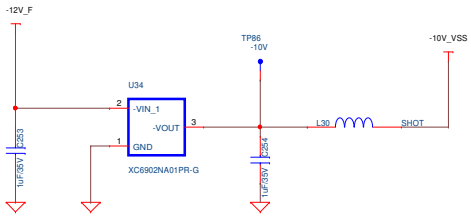

Title	Integrated Data Aquisition Board	DIGILOGIC Innovative solutions	
Size C	Document Number	low_dropout_regulator	Rev ?
Date:	Monday, October 27, 2025	Sheet 11 of 26	

AD7384-4BPCZ-ADC1

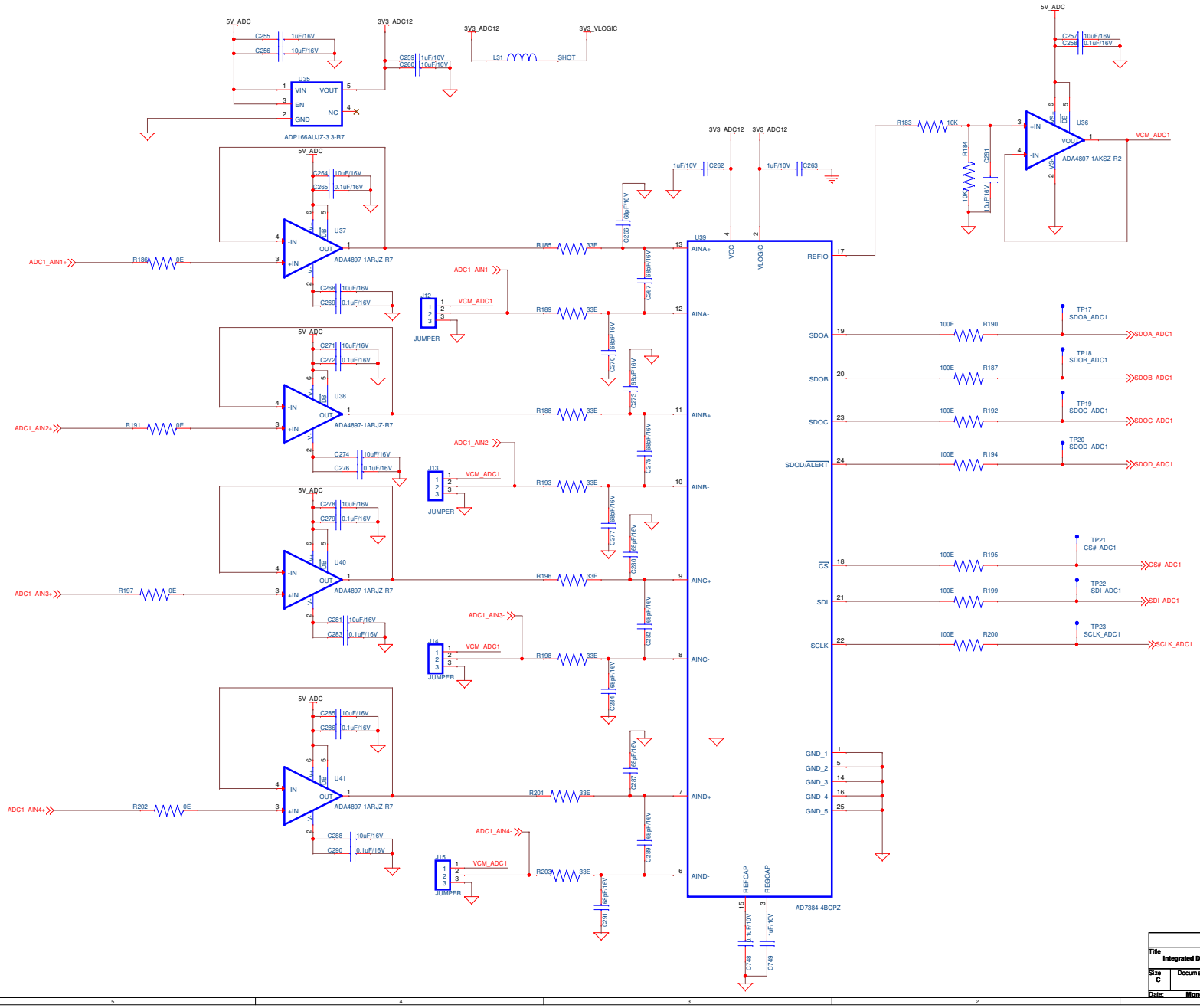

Title	Integrated Data Aquisition Board		
Size C	Document Number	ADC1_PSEUDO_DIFF_INPUT	Rev ?
Date: Monday, October 27, 2025	Sheet 12 of 26		

AD7384-4BPCZ-ADC2

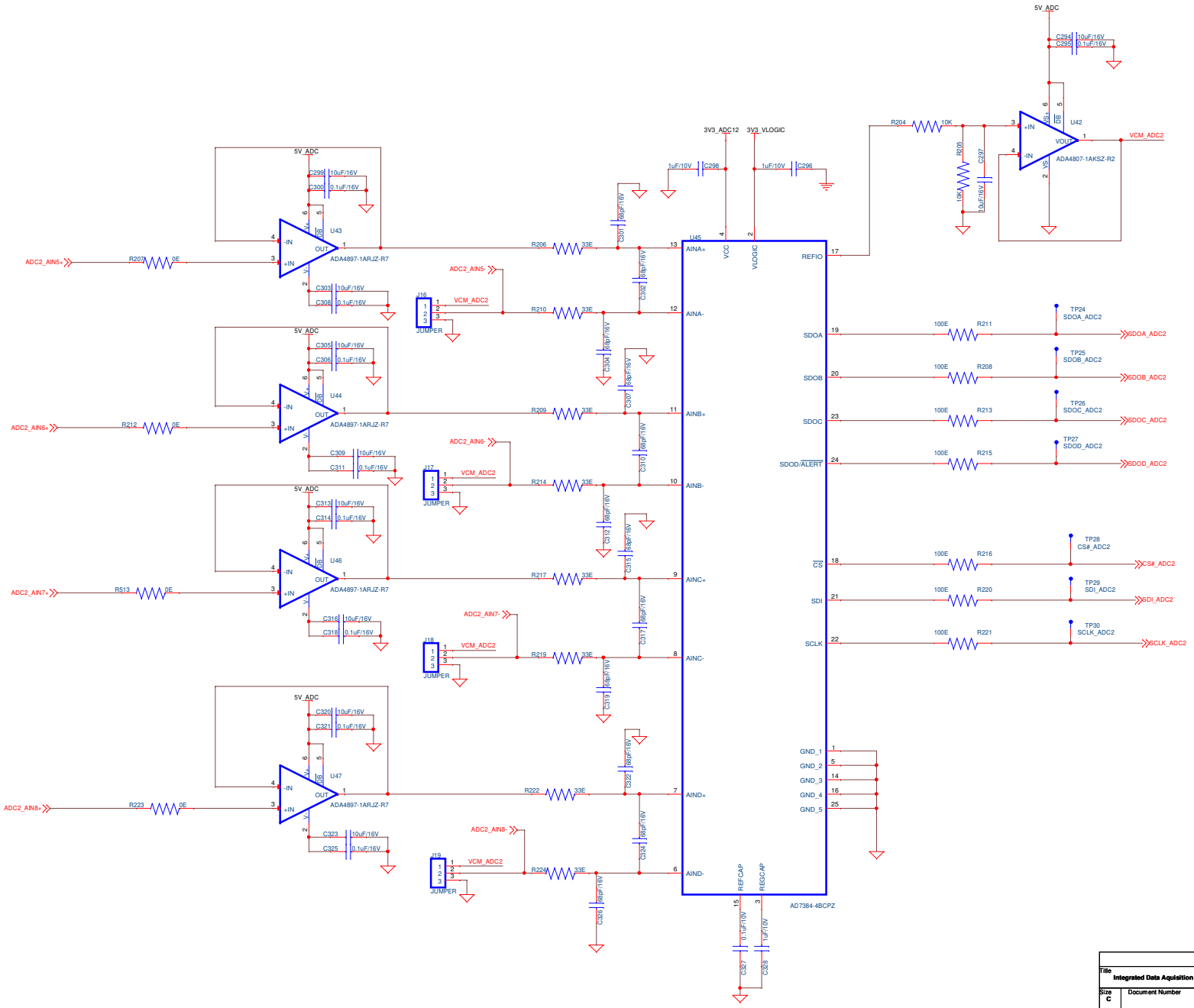

Title	Integrated Data Aquisition Board	DIGILOGIC innovative solutions	
Size C	Document Number	ADC2_PSEUDO_DIFF_INPUT	Rev ?
Date: Monday, October 27, 2025	Sheet 13 of 26		

AD7328BRUZ-ADC3(SINGLE ENDED WITH INPUT BUFFER)

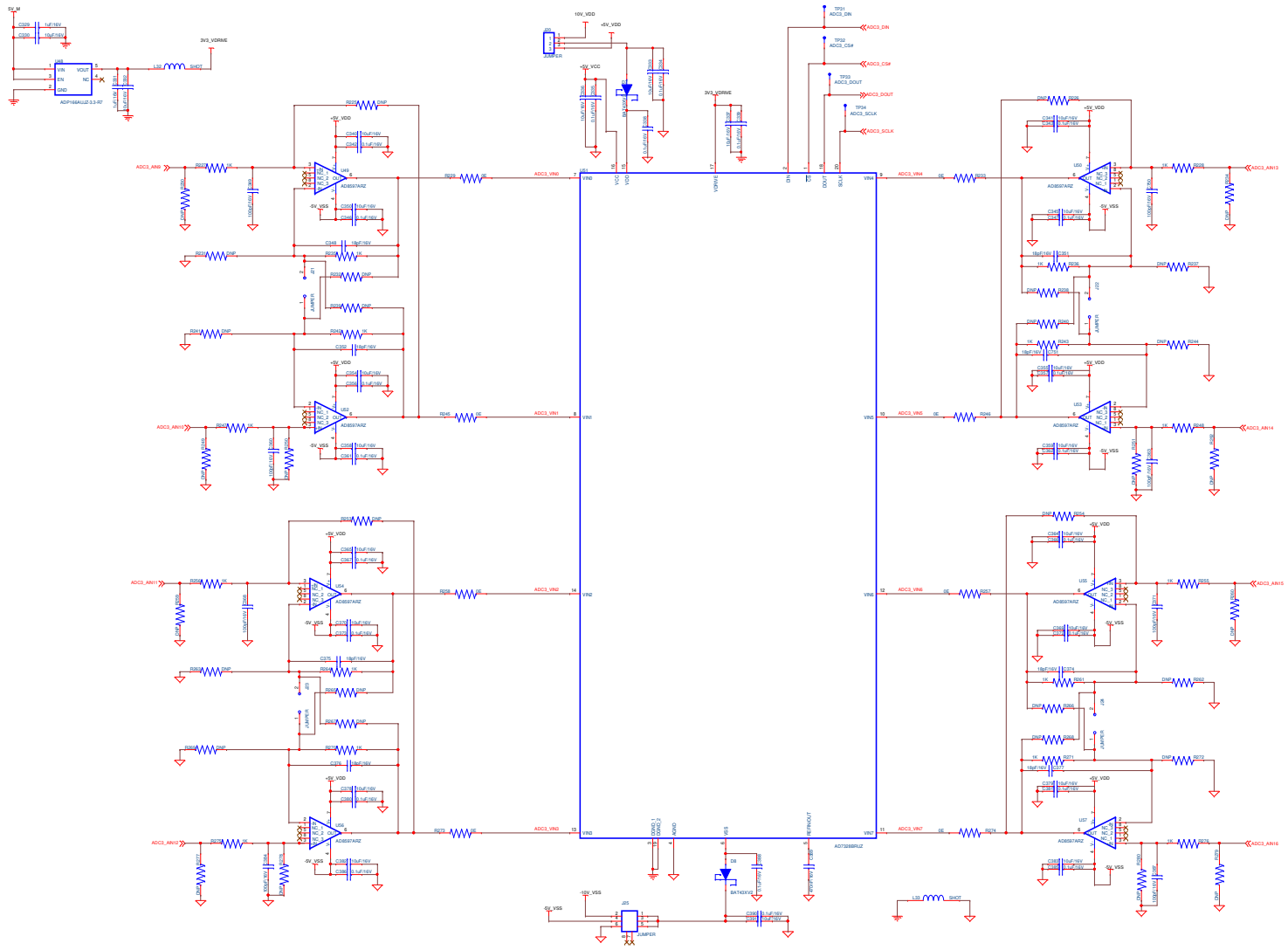

Title	Integrated Data Aquisition Board		
Size: B	Document Number	ADC3_SINGLE_ENDED	Rev: 1.4
Date:	Monday, October 27, 2008	Sheet 14 of 28	

AD7328BRUZ-ADC4(SINGLE ENDED WITH INPUT BUFFER)

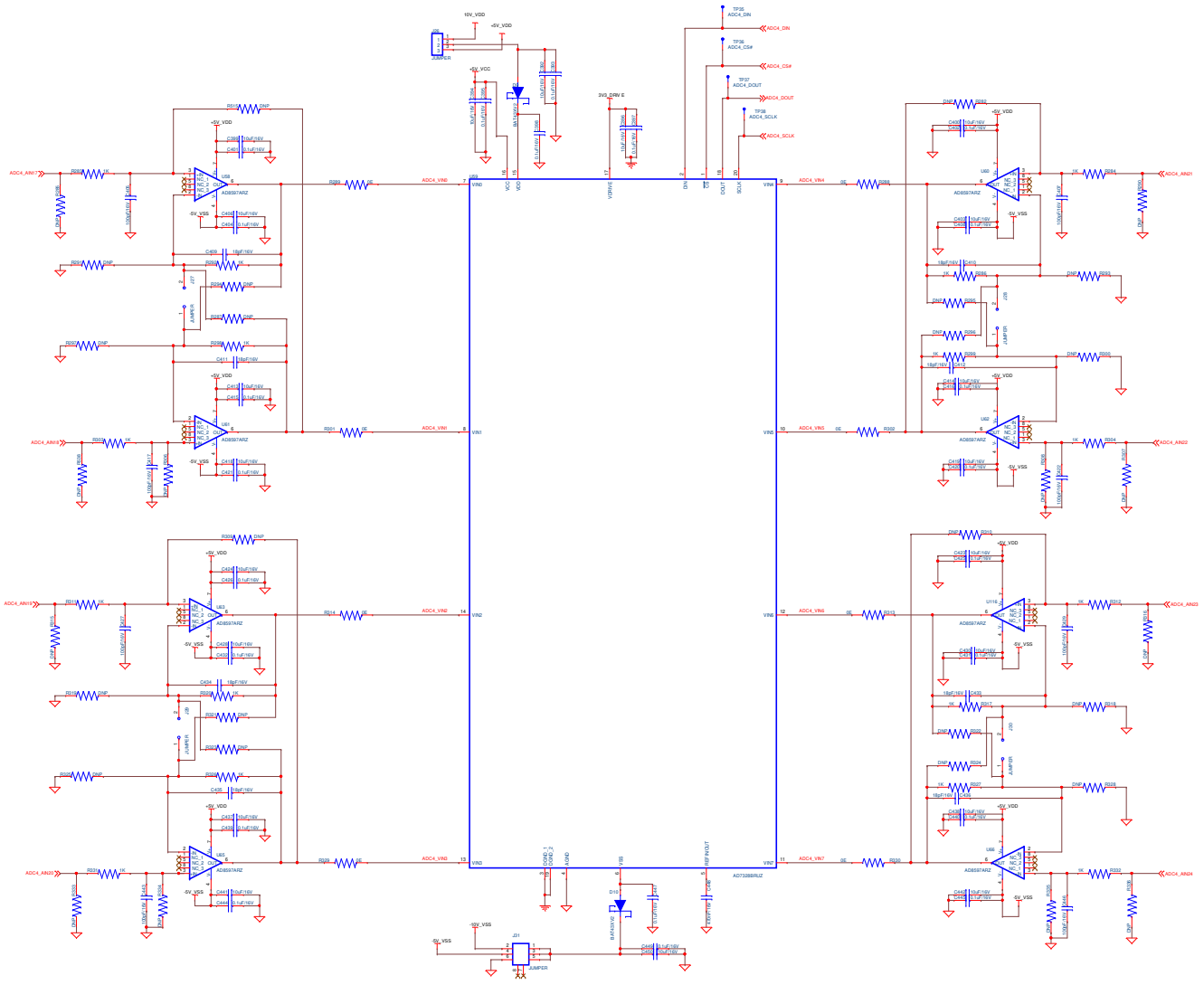

Title	Integrated Data Aquisition Board		
Size: B	Document Number	ADC4_SINGLE_ENDED	Rev: 4
Date:	Monday, October 27, 2008	Sheet 15 of 28	

AD7328BRUZ-ADC5(SINGLE ENDED WITH INPUT BUFFER)

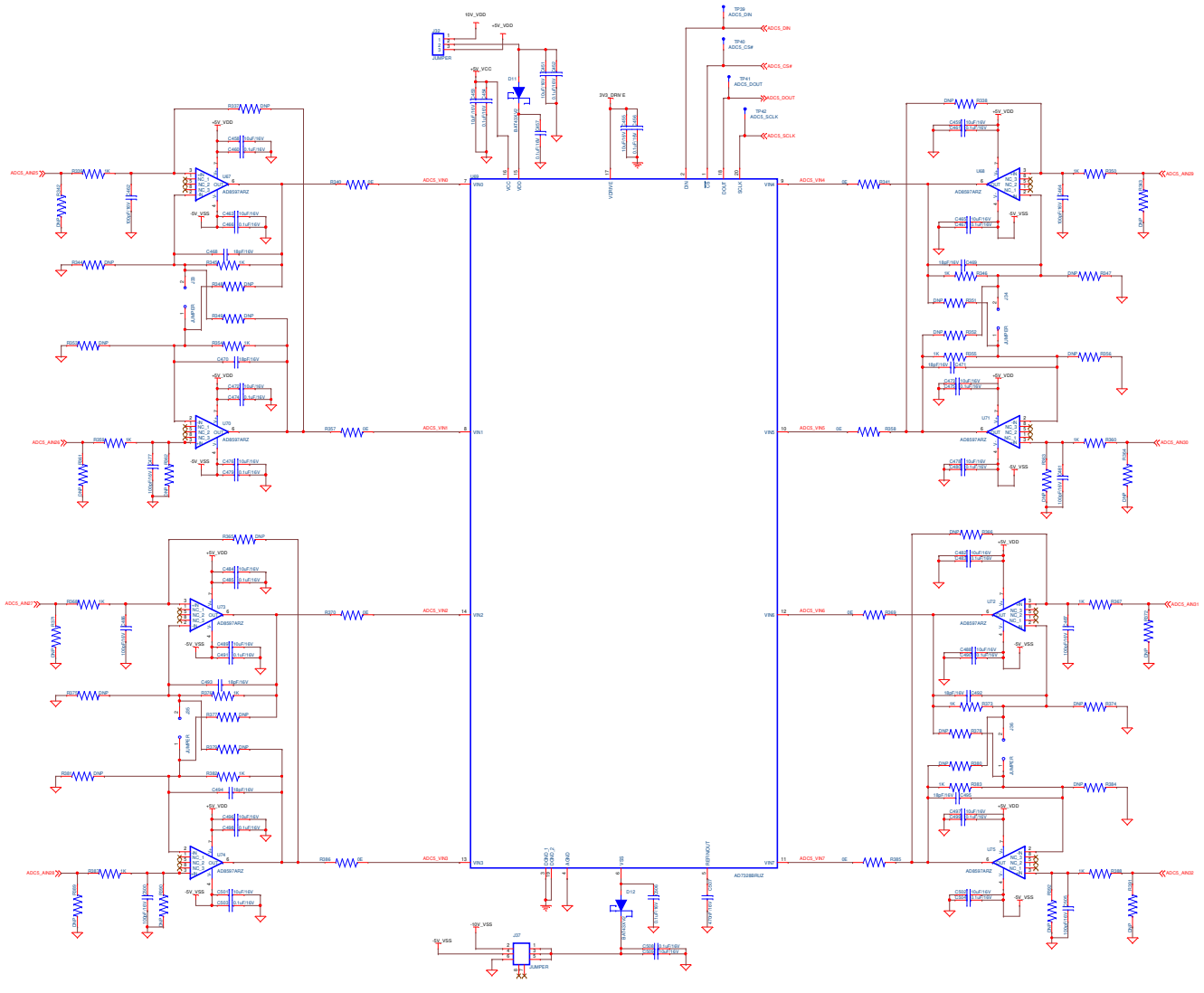

Title	Integrated Data Aquisition Board	digilogic	
Size: B	Document Number: ADC5_SINGLE_ENDED		Rev: 4
Date: Monday, October 27, 2008	Sheet 16 of 28		

AD3542RBCPZ16-DAC1

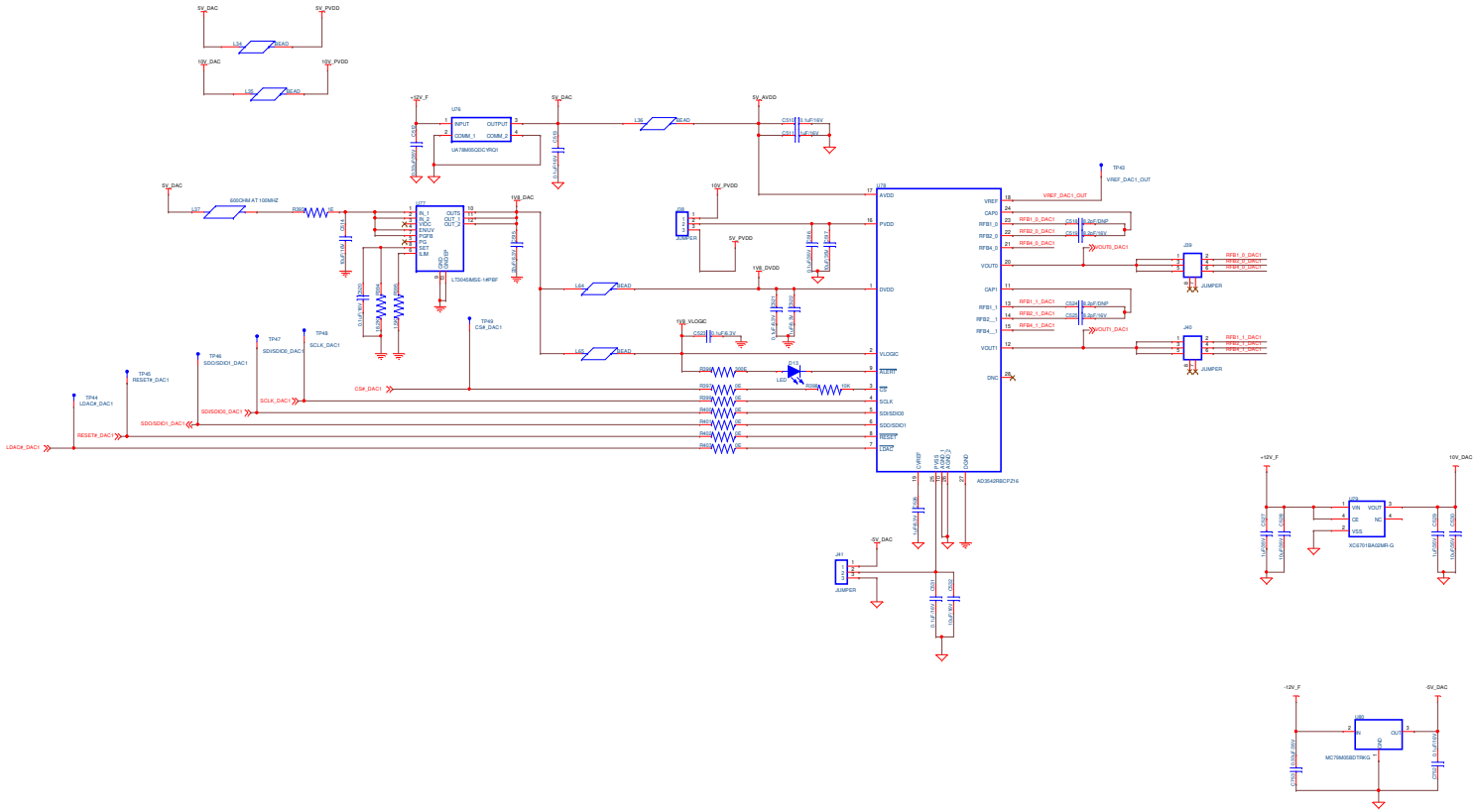

Title	Integrated Data Aquisition Board		
Size: B	Document Number	DAC1	Rev: 4
Date:	Monday, October 27, 2008	Sheet 12 of 28	

AD3542RBCPZ16-DAC2

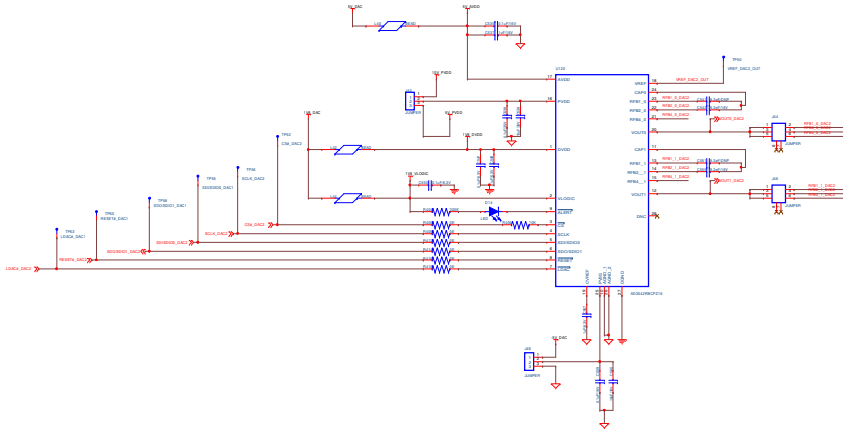

AD3542RBCPZ16-DAC3

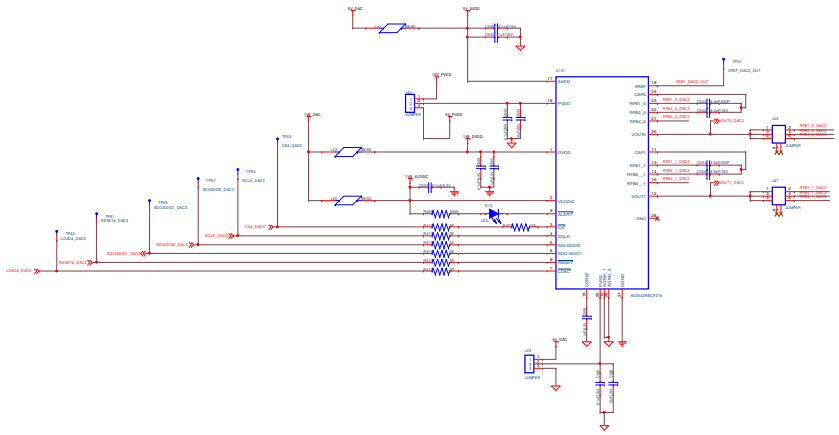

AD3542RBCPZ16-DAC4

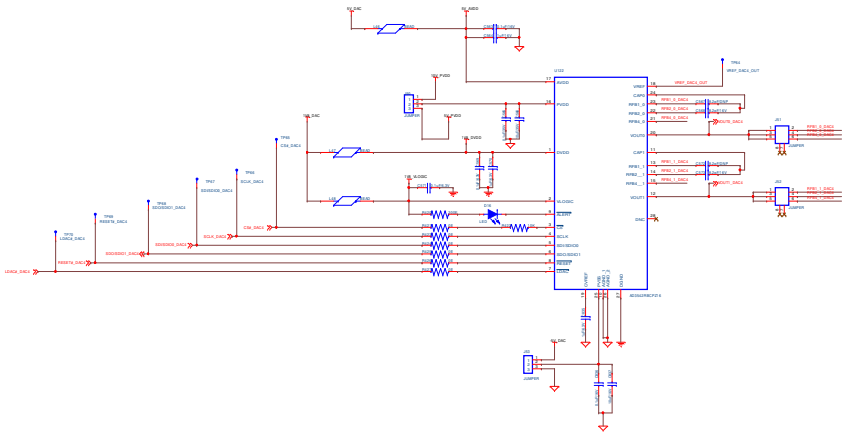

Title: Integrated Data Acquisition Board

DIGILOGIC

Document Number: [illegible]

Rev: [illegible]

Date: Monday, [illegible] 2, 2010 Sheet [illegible] of [illegible]

PL_PMOD_1

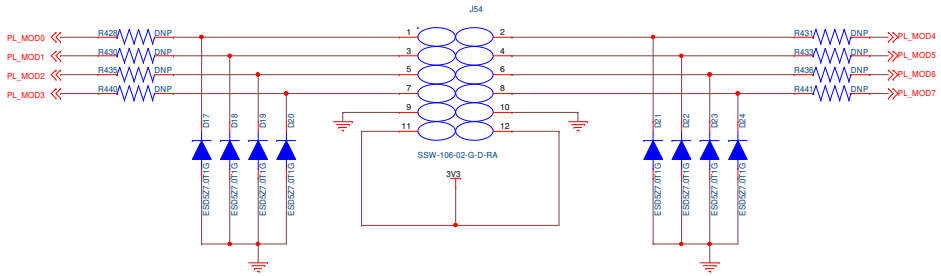

PL_PMOD_2

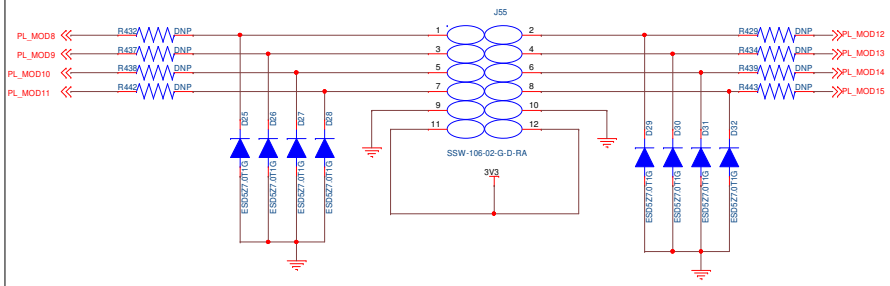

QUAD_CH DIGITAL (COUNTER)

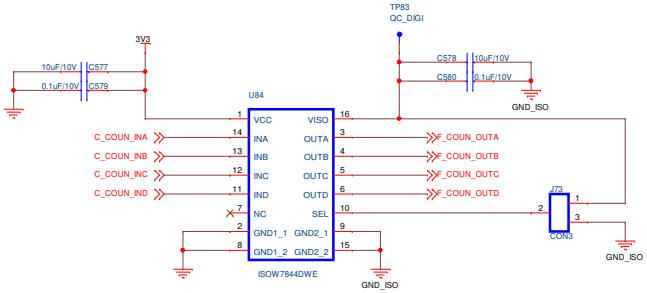

Title	Integrated Data Aquisition Board	DIGILOGIC innovative solutions	
Size C	Document Number	PMOD_QUAD_CH_DIG_COUNTER	Rev ?
Date: Monday, October 27, 2025	Sheet 19 of 26		

RS-422 (DIFFERENTIAL DIGITAL IN & OUT)

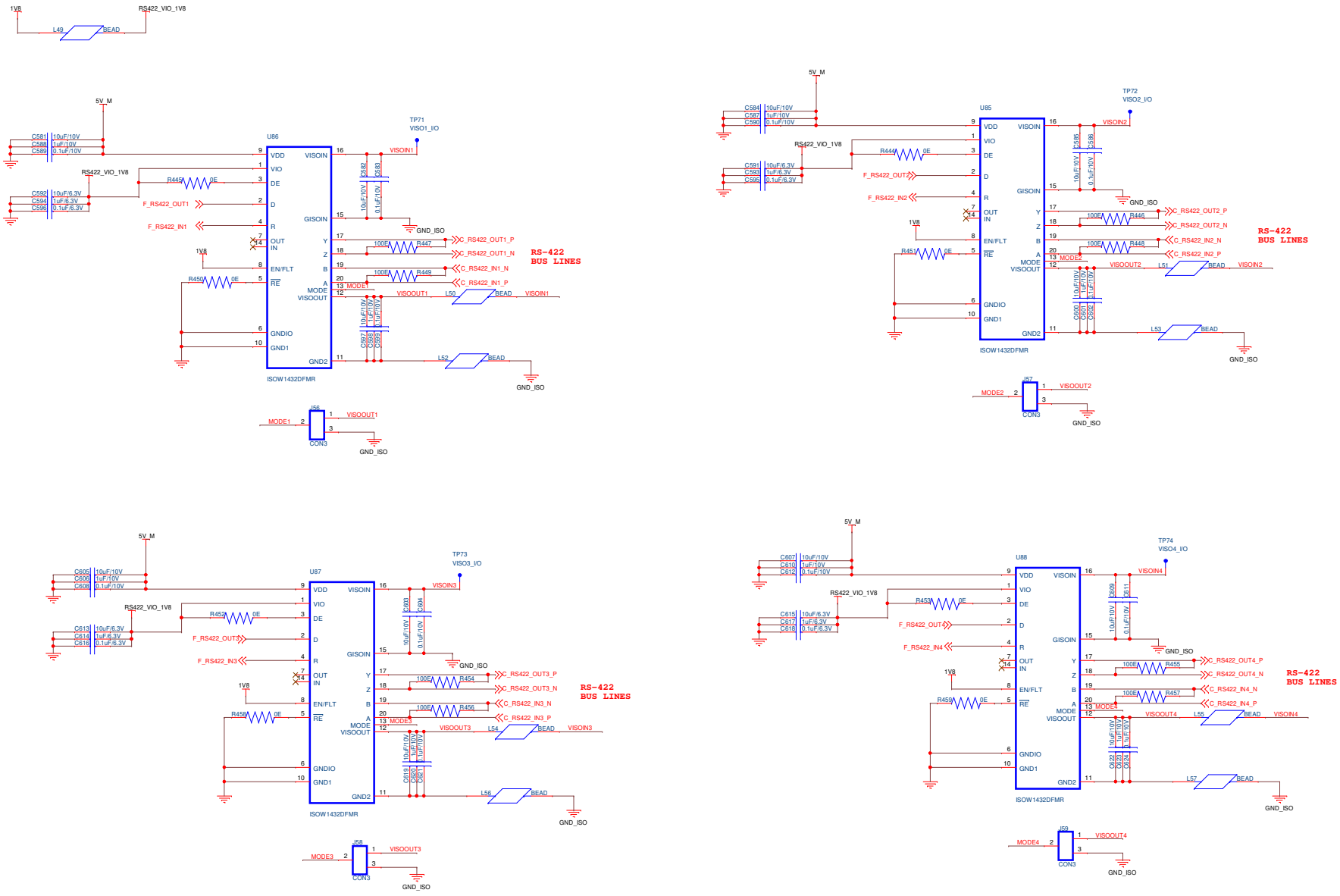

Title	Integrated Data Aquisition Board	DIGILOGIC innovative solutions	
Size C	Document Number	RS-422_DIGITAL_IN_OUT	Rev ?
Date:	Monday, October 27, 2025	Sheet 20 of 26	

DIGITAL_INPUT_ISOLATOR

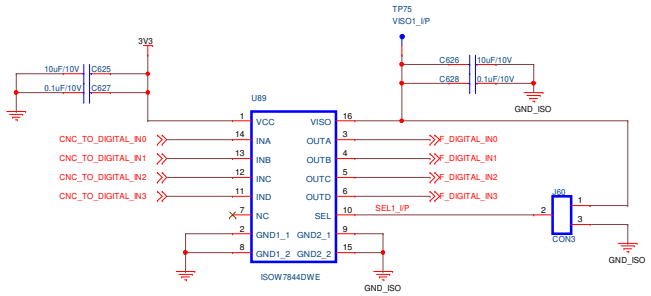

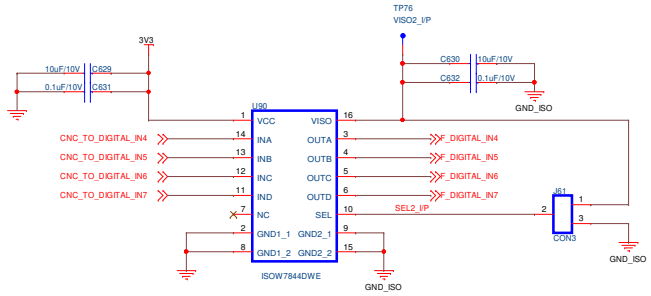

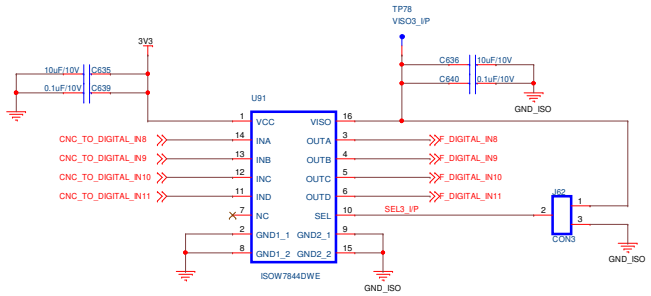

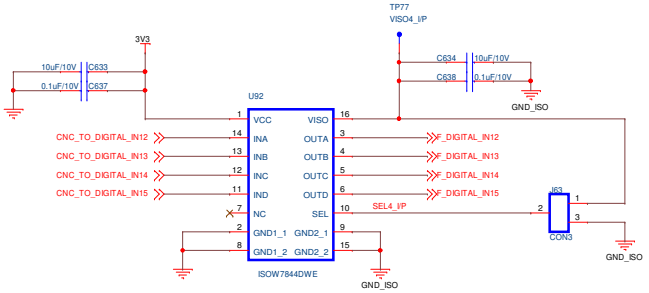

Title	Integrated Data Aquisition Board	DIGILOGIC innovative solutions	
Size C	Document Number	ISOW7844DWE_DIG_INPUT	Rev ?
Date: Monday, October 27, 2025	Sheet 21 of 26		

DIGITAL_OUTPUT_ISOLATOR

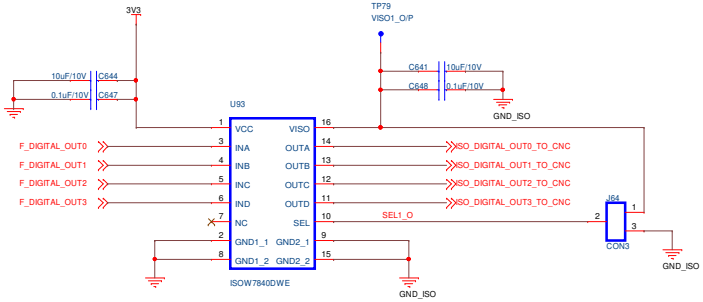

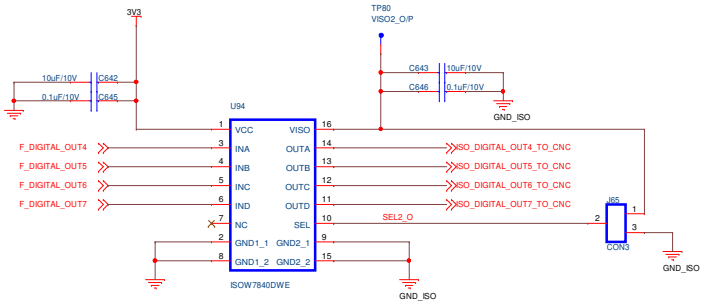

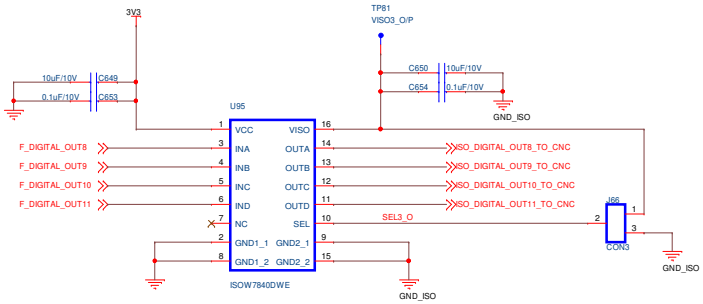

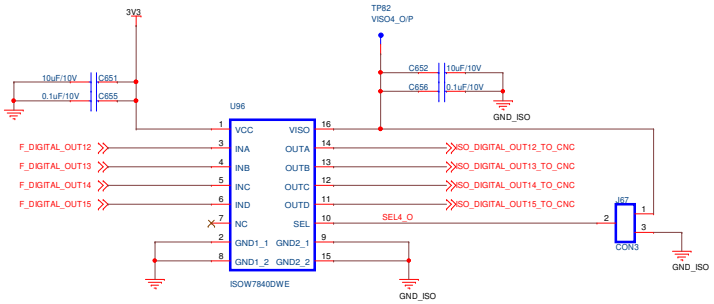

Title	Integrated Data Aquisition Board	DIGILOGIC innovative solutions
Size C	Document Number ISOW7840DWE_DIG_OUTPUT	Rev ?
Date: Monday, October 27, 2025	Sheet 22 of 26	

GPIO_LEDS_GREEN

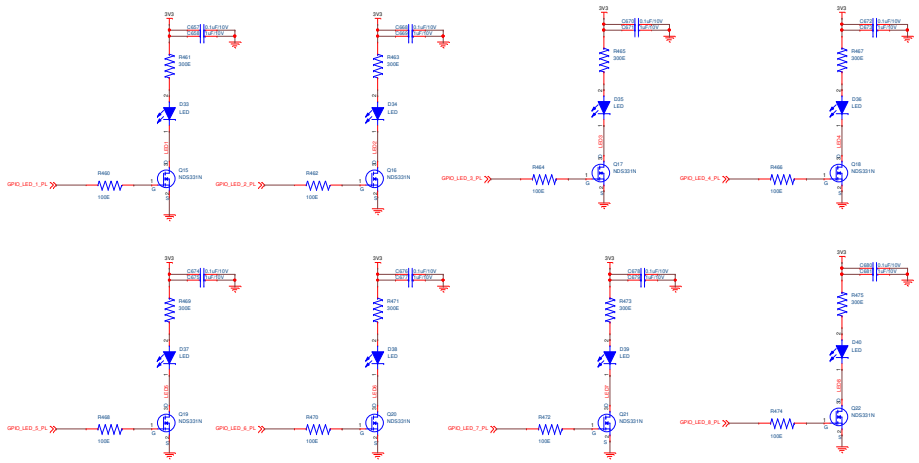

BANK_35

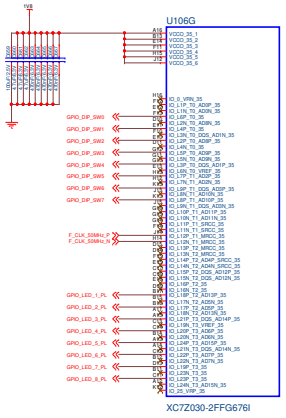

DIP_SWITCH_SPST

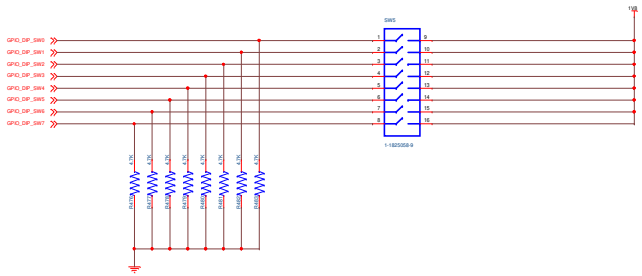

PL_CLOCK_50MHz

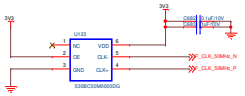

Title: Integrated Data Aquisition Board		DIGILOGIC Innovation Inspiration
Size: B	Document Number: LEDS_DIP-SW_PLCLK_BANK35	Rev: 4
Date: Monday, October 27, 2025	Sheet 35 of 35	

BANK-13

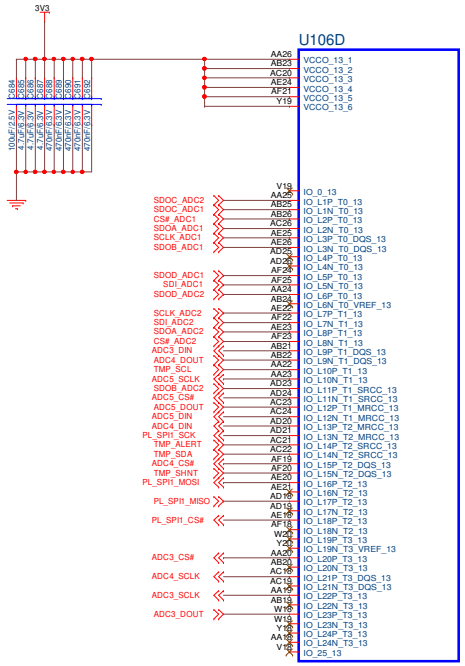

BANK-12

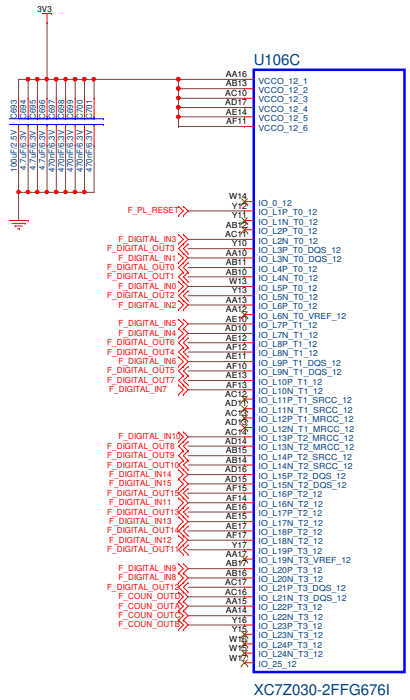

Title	Integrated Data Aquisition Board	DIGILOGIC Innovative solutions	
Size C	Document Number	BANK12_BANK13	Rev ?
Date:	Monday, October 27, 2025	Sheet 24 of 26	

BANK_33

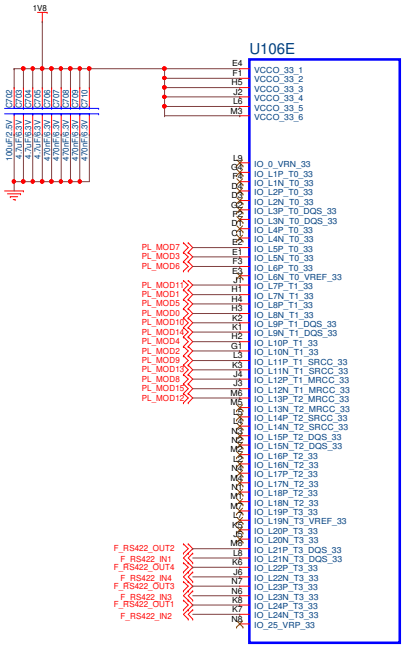

BANK_34

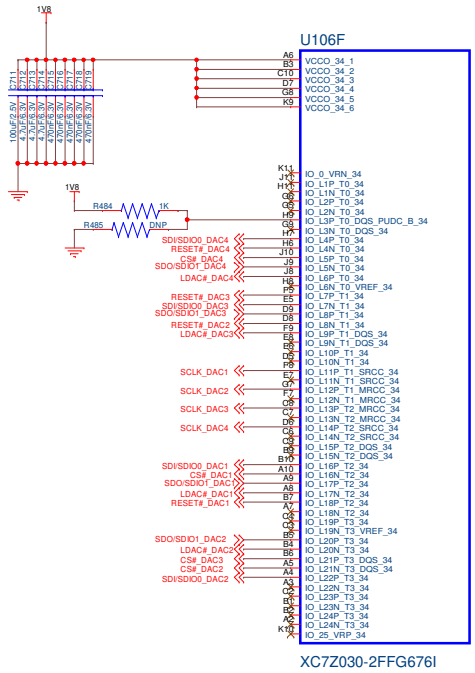

Title	Integrated Data Aquisition Board	DIGILOGIC innovative solutions	
Size C	Document Number	BANK33_BANK34	Rev ?
Date:	Monday, October 27, 2025	Sheet 25 of 26	

CONNECTOR_DETAILS

ADC_IN_CONNECTOR

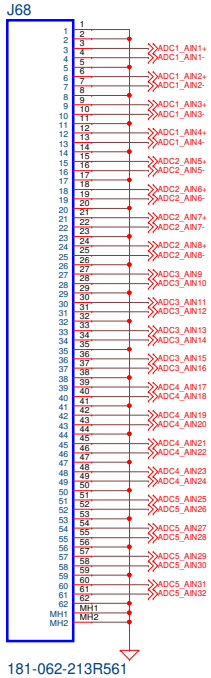

DAC_OUT_CONNECTOR

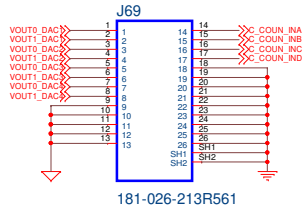

DIGITAL_IN_OUT_ISO_CONNECTOR

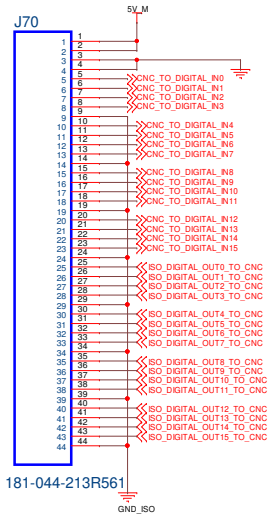

RS422_OUT_CONNECTOR

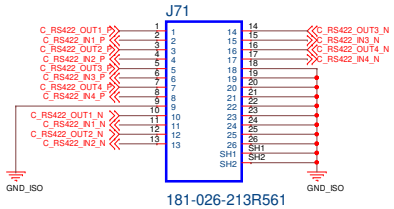

POWER_SUPPLY_CONNECTOR

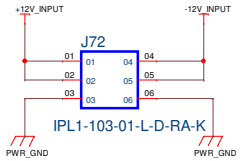

Title	Integrated Data Aquisition Board	DIGILOGIC innovative solutions	
Size C	Document Number	CONNECTOR_DETAILS	Rev ?
Date:	Monday, October 27, 2025	Sheet 26 of 26	