Saraswathi - JR (1)
Asst. Professor
Dpt - EC

MODULE - 4

Embedded System Components

Embedded Vs. General computing system

General computing system	Embedded system
* A system which is a combination of generic hardware and general purpose operating system for executing a variety of applications.	* A system which is a combination of special purpose hardware and embedded OS for executing a specific set of applications.
* Contain a general purpose operating system (GPOS).	* May or may not contain an operating system for functioning.
* Applications are alterable (programmable) by user (It is possible for the end user to re-install the operating system, and add or remove user applications).	* The firmware of the embedded system is pre-programmed and it is non-alterable by end-user.
* Performance is the key deciding factor on the selection of the system. Always, Faster is Better.	* Application specific requirements (like performance, power requirements, memory usage etc) are the key deciding factors.
* Less/not at all tailored towards reduced operating power requirements, options for different levels of power management.	* Highly tailored to take advantage of the power saving modes supported by hardware and operating system.
* Response requirements are not time critical.	* For certain category of embedded systems like mission critical systems, the respons time requirement is highly critical.

Scanned with OKEN Scanner

* Need not be deterministic in execution behavior.	* Execution behavior is deterministic for certain type of embedded systems like,, Hard Real Time" systems.

Classification of Embedded Systems:-

1) Embedded Systems - Classification based on Generation.

* First Generation:-

The early embedded systems built around 8-bit microprocessors like 8085 and Z80 and 4-bit. microcontrollers.

Ex:- Stepper motor controls units, Digital telephone Keypads etc

* Second Generation:-

Embedded Systems built around ~~high perhaoperformance~~ 16-bit microprocessors and 8 or 16-bit microcontrollers, following the first generation embedded systems.

Ex:- SCADA, Data Acquisition Systems etc.

* Third Generation:-

Embedded Systems built around high performance 16/32 bit microprocessors/ controllers, application specific instruction set processors like digital signal processors (DSPs), and application specific integrated circuits (ASICs). The instruction set is complex and powerful.

Ex:- Robotics, industrial process control, networking etc

* Fourth Generation:-

Embedded systems built around system on chips (SoC's) reconfigurable processors and multicore processors. It brings high performance, tight integration and miniaturization into the embedded device market

Ex:- Smart phone devices, MIDs etc.

Scanned with OKEN Scanner

2) Embedded Systems - Classification based on Complexity and Performance.

* Small Scale :-

The embedded systems built around low performance and low cost 8 or 16 bit microprocessors/ microcontrollers. It is suitable for simple applications and where performance is not time critical. It may or may not contain OS.

* Medium Scale :-

Embedded systems built around medium performance, low cost 16 or 32 bit microprocessors / microcontrollers or DSPs. These are slightly complex in hardware and firmware. It may contain GPOS/RTOS.

* Large Scale / Complex :-

Embedded systems built around high performance. 32 or 64 bit RISC processors / controllers, RSoC or multi-core processors and PLD. It requires complex hardware and software. These system may contain multiple processors/ controllers and co-units / hardware accelerators for offloading the processing requirements from the main processor. It contains RTOS for scheduling, prioritization and management.

3) Embedded Systems - Classification based on deterministic behavior.

It is applicable for Real time systems. The application / task execution behavior for an embedded system can be either deterministic or non-deterministic.

These are classified in to two types:-

Scanned with OKEN Scanner

1) Soft Real time Systems:-

Missing a deadline may not be critical and can be tolerated to a certain degree.

2) Hard Real time systems:-

Missing a program/task execution time deadline can have catastrophic consequences (financial, human loss of life, etc).

4) Embedded Systems - Classification Based on Triggering:-

These are classified into two types:-

1) Event triggered:-

Activities within the system (e.g... task run-times) are dynamic and depend upon occurance of different events.

2) Time triggered:-

Activities within the system follow a statically computed schedule (i.e, they are allocated time slots during which they can take place) and thus by nature are predictable.

Major Application Areas of Embedded Systems:-

* Consumer Electronics:-

Camcorders, Cameras etc.

* Household Appliances:-

Television, DVD players, washing machine, Fridge, Microwave Oven etc

* Home Automation and Security Systems:-

Air conditioners, sprinklers, intruder detection alarms, closed circuit Television Cameras, Fire alarms etc.

Scanned with OKEN Scanner

* Automotive Industry:

~~Televi~~ Anti-lock breaking systems (ABS), Engine Control, Ignition Systems, automatic navigation systems etc.

* Telecom:-

Cellular Telephones, Telephone switches, Handset multimedia applications etc.

* Computer peripherals:-

Printers, Scanners, Fax machines etc.

* Computer networking systems:-

Network routers, switches, hubs, firewalls etc.

* Health care:-

Different kinds of scanners, EEG, ECG machines etc.

* Measurement and instrumentation:-

Digital multi meters, digital CROs, Logic analyzers PLC systems etc

* Banking & Retail:-

Automatic Teller machines (ATM) and Currency counters, point of sales (POS)

* Card Readers:-

Barcode, Smart Card Readers, Hand held Devices etc.

Purpose of Embedded Systems:

Each embedded systems is designed to serve the purpose of any one or a combination of the following tasks.

Scanned with OKEN Scanner

1) Data collection / storage / Representation:-

* Performs acquisition of data from the external world.
* The collected data can be either analog or digital.
* Data Collection is usually done for storage, analysis, manipulation and transmission.
* The collected data may be stored directly in the system or may be transmitted to some other systems or it may be processed by the system or it may be deleted instantly after giving a meaningful representation.

2) Data Communication:-

* Embedded data communication systems are deployed in applications ranging from complex satellite communication systems to simple home networking systems.
* Embedded data communication systems are dedicated for data communication.
* The data communication can happen through a wired interface (like Ethernet RS-232C/USB/IEEE1394 etc) or wireless interface (like Wi-Fi, GSM/GPRS, Bluetooth, ZigBee etc)
* Network hubs, Routers, switches, modems etc are typical examples for dedicated data transmission embedded systems.

3) Data (Signal) Processing:-

* Embedded systems with signal processing functionalities are employed in applications demanding signal processing like speech coding, synthesis, audio·video codec, transmission

Scanned with OKEN Scanner

applications etc

* Computational intensive systems
* Employs digital signal processors (DSPs).

4) Monitoring:-

* Embedded systems coming under this category are specifically designed for monitoring purpose.
* They are used for determining the state of some variables using input sensors.
* They cannot impose control over variables.
* Electro Cardiogram (ECG) machine for monitoring the heart beat of a patient is a typical example for this.
* The sensors used in ECG are the different Electrodes connected to the patient's body.
* Measuring instruments like digital CRO, digital multi meter, logic analyzer etc used in control and instrumentation applications are also examples of embedded systems for monitoring purpose.

5) Control:-

* Embedded systems with control functionalities are used for imposing control over some variables according to the changes in input variables.
* Embedded system with control functionality contains both sensors and actuators.
* Sensors are connected to the input port for capturing the changes in environmental variable or measuring variable.

Scanned with OKEN Scanner

* The actuators connected to the output port are controlled according to the changes in input variable to put an impact on the controlling variable to bring the controlled variable to the specified range.
* Air conditioner for controlling room temperature is a typical example for embedded system with "Control" functionality.
* Air conditioner contains a room temperature sensing element (sensor) which may be a thermistor and a handheld unit for setting up (feeding) the desired temperature.
* The air compressor unit acts as the actuator. The compressor is controlled according to the current room temperature and the desired temperature set by the end user.

6) Application Specific User Interface.

* Embedded systems which are designed for a specific application.
* Contains application specific user interface (rather than general standard UI) like key board, display units etc.
* Aimed at a specific target group of users.
* Mobile handsets, control units in industrial applications etc are examples.

Scanned with OKEN Scanner

Difference Between RISC & CISC.

RISC	CISC
* Lesser number of instructions.	* Greater number of instruction
* Instruction pipelining and increased execution speed.	* Generally no instruction pipelining feature.
* Orthogonal instruction set (Allows each instruction to operate on any register and use any addressing mode)	* Non orthogonal instruction set (All instructions are not allowed to operate on any register and use any addressing mode. It is instruction specific).
* Operations are performed on registers only, the only memory operations are load and store.	* Operations are performed on registers or memory depending on the instruction.
* Large number of registers are available.	* Limited number of general purpose registers.
* Programmer needs to write more code to execute a task since the instructions are simpler ones.	* A programmer can achieve the desired functionality with a single instruction which in turn provides the effect of using more simpler single instructions in RISC.
* Single, Fixed length instructions	* Variable length instructions
* Less Silicon usage and pin count.	* More silicon usage since more additional decoder logic is required to implement the complex instruction decoding.
* With Harvard Architecture.	* Can be Harvard or Von-Neumann Architecture

Scanned with OKEN Scanner

Harvard v/s Von-Neumann Processor/controller Architecture.

* The terms Harvard and Von-Neumann refers to the processor architecture design.
* Microprocessors/controllers based on the ~~common bus for fetching~~ Von-Neumann architecture shares a single common bus for fetching both instructions and data. Program instructions and data are stored in a common main memory.
* Microprocessors/controllers based on the Harvard architecture will have separate data bus and instruction bus. This allows the data transfer and program fetching to occur simultaneously on both buses.
* With Harvard architecture, the data memory can be read and written while the program memory is being accessed. These separated data memory and code memory ~~on~~ buses allow one instruction to execute while the next instruction is fetched ("Pre-fetching").

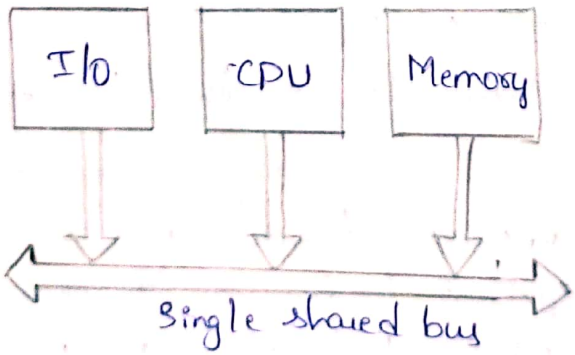

Von-Neumann Architecture

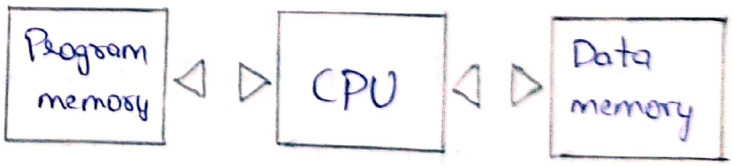

Harvard Architecture.

Scanned with OKEN Scanner

Harvard Architecture	Von-Neumann Architecture
* Separate buses for instruction and data fetching.	* Single shared bus for instruction and data fetching.
* Easier to pipeline, so high performance can be achieved.	* Low performance compared to Harvard Architecture.
* Comparatively high cost.	* Cheaper.
* No memory alignment problems	* Allows self modifying codes.
* Since data memory and program memory are stored physically in different locations, no chances for accidental corruption of program memory.	* Since data memory and program memory are stored physically in same chip, chances for accidental corruption of program memory.

Big-endian and Little-endian processors:

* Endianness specifies the order in which the data is stored in the memory by processor operations in a multi byte system (Processors whose word size is greater than one byte). Suppose the word length is two byte then data can be stored in memory in two different ways

→ Higher order of data byte at the higher memory and lower order of data byte at location just below the higher memory

→ Lower order of data byte at the higher memory and higher order of data byte at location just below the higher memory.

Scanned with OKEN Scanner

* Little-endian means the lower order-byte of the data is stored in memory at the lowest address, and the higher-order byte at the highest address. (The little end comes first).

* Big-endian means the higher order-byte of the data is stored in memory at the lowest address, and the lower order byte at the highest address. (The big end comes first).

Big-endian v/s Little-endian processors

Base address+0	Byte0	Byte 0	0x20000 (Base address)
Base address+1	Byte1	Byte1	0x20001 (Base address+1)
Base address+2	Byte2	Byte2	0x20002 (Base address+2)
Base address+3	Byte3	Byte3	0x20003 (Base address+3)

Little-endian operation.

Base address+0	Byte3	Byte3	0x20000 (Base address)
Base address+1	Byte2	Byte2	0x20001 (Base address+1)
Base address+2	Byte1	Byte1	0x20002 (Base address+2)
Base address+3	Byte0	Byte0	0x20003 (Base address+3)

Big-endian operation

Scanned with OKEN Scanner

Memory :-

* Memory is an important part of an embedded system. The memory used in embedded system can be either program storage memory (ROM) or data memory (RAM).
* Certain embedded processors / controllers contain built in program memory and data memory and this memory is known as on-chip memory.
* Certain embedded processors / controllers do not contain sufficient memory inside the chip and requires external memory called off-chip memory or external memory.

Memory - Program Storage memory :-

* Stores the program instructions
* Retains its contents even after the power to it is turned off. It is generally known as Non volatile storage memory.
* Depending on the fabrication, erasing and programming techniques they are classified into

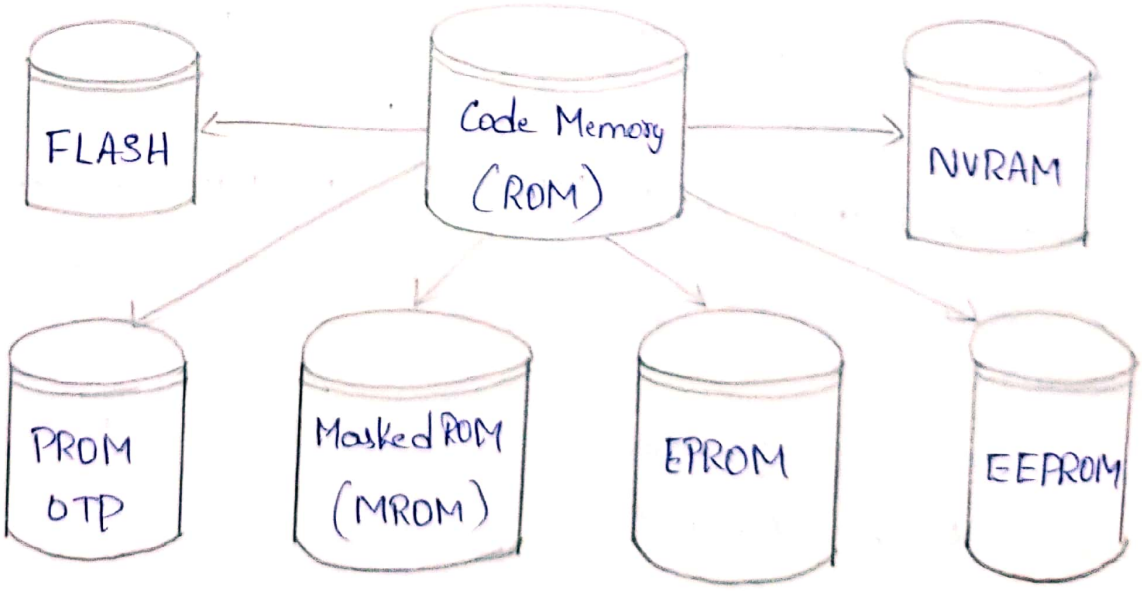

Scanned with OKEN Scanner

1) Masked ROM (MROM):-

* One time programmable memory.
* Uses hardwired technology for storing data.
* The device is factory programmed by masking and metallization process according to the data provided by the end user.
* The primary advantage of MROM is low cost for high volume production.
* MROM is the least expensive type of solid state memory
* Different mechanisms are used for the masking process of the ROM, like

→ Creation of an enhancement or depletion mode transistor through channel implant.

→ By creating the memory cell either using a standard transistor or a high threshold transistor.

→ In the high threshold mode, the supply voltage required to turn ON the transistor is above the normal ROM IC operating voltage.

→ This ensures that the transistor is always off and the memory cell stores always logic 0.

* The limitation with MROM based firmware storage is the inability to modify the device firmware against firmware upgrades.
* The MROM is permanent in bit storage, it is not possible to alter the bit information.

Scanned with OKEN Scanner

2) Programmable Read Only Memory (PROM) / (OTP):-

* It is not pre-programmed by the manufacturer.
* The end user is responsible for programming these devices.
* PROM/OTP has nichrome or polysilicon wires arranged in a matrix, these wires can be functionally viewed as fuses.
* It is programmed by a PROM programmer which selectively burns the fuses according to the bit pattern to be stored.
* Fuses which are not blown / burned represents a logic "1" where as fuses which are blown / burned represents a logic "0". The default state is logic "1".
* OTP is widely used for commercial production of embedded systems whose proto-typed versions are proven and the code is finalized.
* It is a low cost solution for commercial production.
* OTPs cannot be reprogrammed.

3) Erasable programmable read only memory (EPROM):-

* Erasable programmable read only (EPROM) memory gives the flexibility to re-program the same chip.
* During development phase, code is subject to continuous changes and using an OTP is not economical.
* EPROM stores the bit information by charging the floating gate of an FET.
* Bit information is stored by using an EPROM Programmer, which applies high voltage to charge the floating gate.

Scanned with OKEN Scanner

* EPROM contains a quartz crystal window for erasing the stored information. If the window is exposed to ultra violet rays for a fixed duration, the entire memory will be erased.

* Even though the EPROM chip is flexible in terms of re-programmability, it needs to be taken out of the circuit board and needs to be put in a UV eraser device for 20 to 30 minutes.

4) Electrically Erasable programmable read only memory (EEPROM)

* Erasable programmable read only (EPROM) memory gives the flexibility to re-program the same chip using electrical signals.

* The information contained in the EEPROM memory can be altered by using electrical signals at the register / Byte level.

* They can be erased and reprogrammed within the circuit.

* These chips include a chip erase mode and in this mode they can be erased in a few milliseconds.

* It provides greater flexibility for system design.

* The only limitation is their capacity is limited when compared with the standard ROM (A few Kilobytes).

5) Programmable Storage memory - Flash

* FLASH memory is a variation of EEPROM technology.

* FLASH is the latest ROM technology and is the most popular ROM technology used in today's embedded designs.

Scanned with OKEN Scanner

* It combines the reprogrammability of EEPROM and the high capacity of standard ROMs.
* Flash memory is organized as sectors (blocks) or pages.
* Flash memory stores information in an array of floating gate MOSFET transistors.
* The erasing of memory can be done at sector level or page level without affecting the other sectors or pages.
* Each sector/page should be erased before re-programming
* The typical erasable capacity of Flash is of the order of a few 1000 cycles.

Read - write memory / Random Access memory (RAM)

* RAM is the data memory or working memory of the controller/processor.
* RAM is volatile, meaning when the power is turned off, all the contents are destroyed.
* RAM is a direct access memory, meaning we can access the desired memory location directly without the need for traversing through the entire memory locations to reach the desired memory position (i.e Random access of memory location).

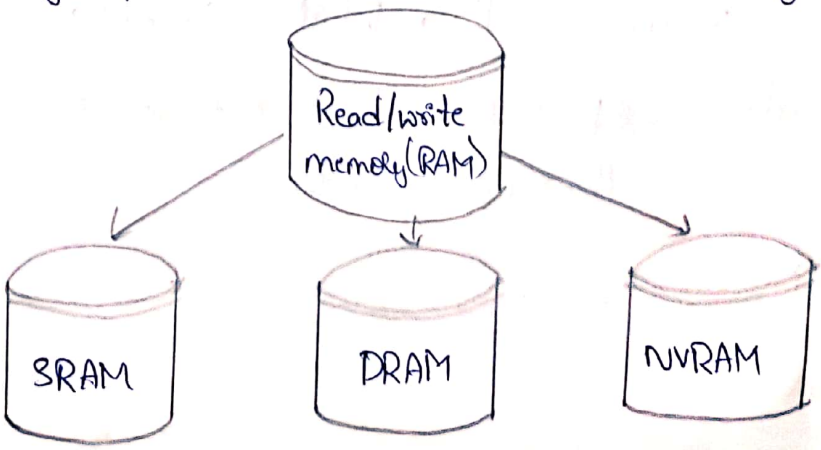

Scanned with OKEN Scanner

1) Static RAM (SRAM):-

→ Static RAM stores data in the form of voltage.

→ They are made up of flip-flops.

→ In typical implementation, an SRAM cell (bit) is realized using 6 transistors (or 6 MOSFETS).

→ Four of the transistors are used for building the latch (flip-flop) part of the memory cell and 2 for controlling the access.

→ Static RAM is the fastest form of RAM available.

→ SRAM is fast in operation due to its resistive networking and switching capabilities.

2) Dynamic RAM (DRAM)

→ Dynamic RAM stores data in the form of charge. They are made up of MOS transistor gates.

→ The advantages of DRAM are its high density and low cost compared to SRAM.

→ The disadvantage is that since the information is stored as charge it gets leaked off ~~wh~~ with time and to prevent this need to be refreshed periodically.

→ Special circuits called DRAM controllers are used for the refreshing operation. The refresh operation is done periodically in milliseconds interval.

Scanned with OKEN Scanner

SRAM Vs DRAM:-

SRAM	DRAM
* Made up of 6CMOS transistors (MOSFET)	* Made up of a MOSFET and a capacitor.
* Doesn't require refreshing	* Requires refreshing.
* Low capacity (less dense)	* High capacity (highly dense)
* More expensive	* Less expensive.
* Fast in operation. Typical access time is 10ns	* Slow in operation due to refresh requirements. Typical access time is 60ns. Write operation is faster than read operation.

3) Non volatile RAM (NVRAM):-

* Random access memory with battery backup.
* It contains static RAM based memory and a minute battery for providing supply to the memory in the absence of external power supply.
* The memory and battery are packed together in a single package.
* NVRAM is used for the non-volatile storage of results of operations or for setting up of flags etc.
* The life span of NVRAM is expected to be around 10 years.
* DS1744 from maxim/Dallas is an example for 32KB NVRAM.

Scanned with OKEN Scanner

Sensors & Actuators:-

* Embedded system is in constant interaction with the real world.
* Controlling / monitoring functions executed by the embedded system is achieved in accordance with the changes happening to the Real world.
* The changes in the system environment or variables are detected by the sensors connected to the input port of the embedded system.
* If the embedded system is designed for any controlling purpose, the system will produce some changes in controlling variable to bring the controlled variable to the desired value.
* It is achieved through an actuator connected to the out port of the embedded system.

Sensor:-

* A transducer device which converts energy from one form to another for any measurement or control purpose. Sensor acts as input device.
* Eg. Hall effect sensor which measures the distance between the cushion and magnet in the smart Running shoes from adidas.
* Example: IR, humidity, PIR (passive infra red), ultrasonic, piezoelectric, smoke sensors.

Scanned with OKEN Scanner

Actuator:-

* A form of transducer device (mechanical or electrical) which converts signals to corresponding physical action (motion). Actuator acts as an output devices.

* Eg. Micro motor actuator which adjusts the position of the cushioning element in the Smart Running shoes from adidas.

Optocoupler:-

* It is a solid state device to isolate two parts of a circuit.
* It combines an LED and a photo-transistor in a singular housing (Package).
* In electronic circuits, optocoupler is used for suppressing interference in data communication, circuit isolation, high voltage separation, simultaneous separation and intensification signal etc.

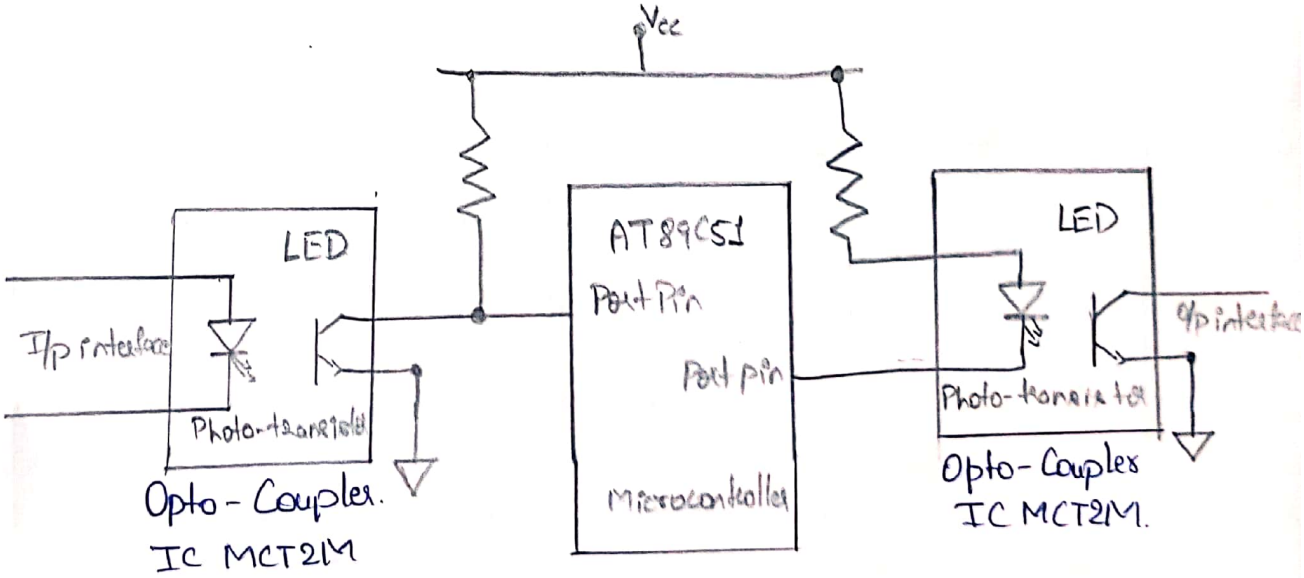

Optocoupler in input and output circuit.

* Optocouplers can be used in either input circuits or in output circuits.

Scanned with OKEN Scanner

Communication Interfaces:-

* It is essential for communicating with various subsystems of the embedded system and with the external world.
* The communication interface can be viewed in two different perspectives
  1) Device / board level communication interface.
  2) Product level communication interface.

I2C (Inter integrated circuit) Bus:-

→ It is a synchronous bi-directional half duplex two wire serial interface bus.

→ The I2C bus is comprised two bus lines, namely; Serial Clock - SCL and Serial data - SDA.

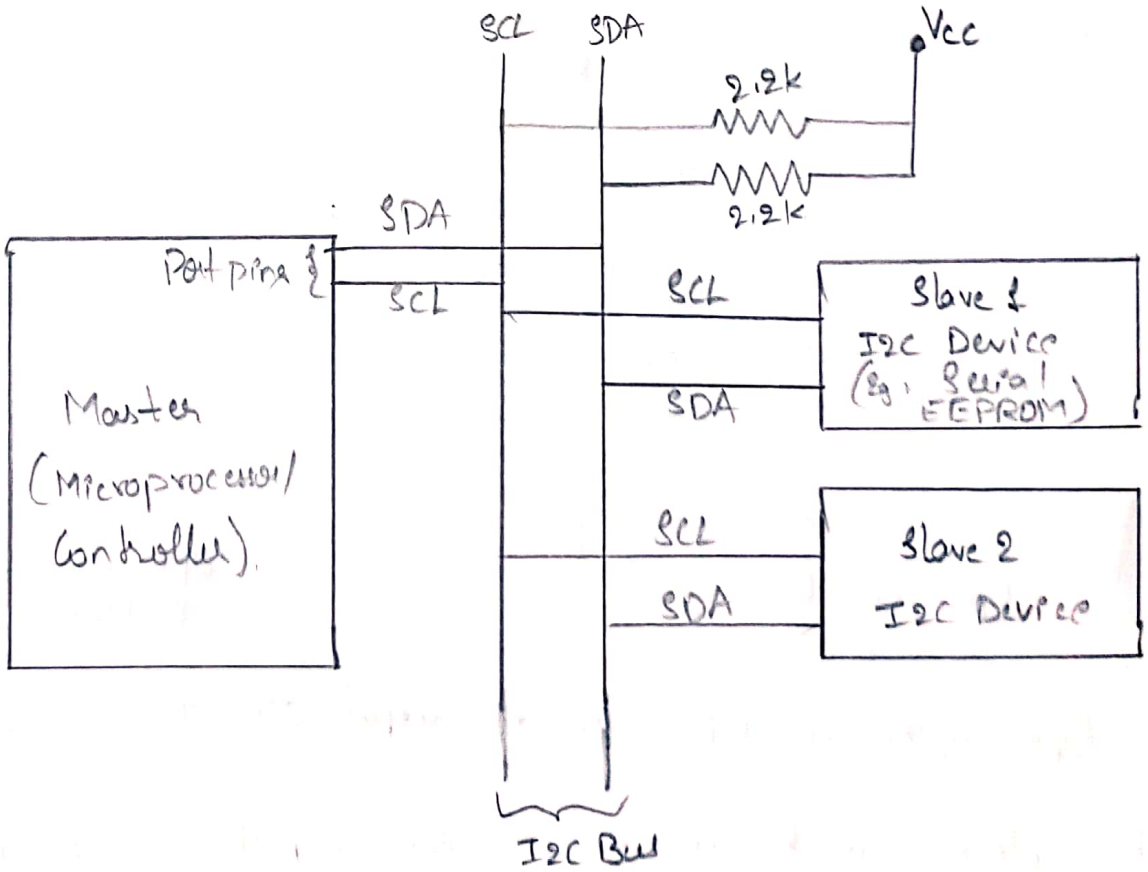

I2C Bus interfacing.

Scanned with OKEN Scanner

→ SCL line is responsible for generating synchronization clock pulses and SDA is responsible for transmitting the serial data across devices.

→ Devices connected to the I2C bus can act as either "Master" & "Slave" device.

→ Master device is responsible for controlling the communication and Slave device wait for the commands from master.

→ Master and slave devices can be act as either transmitter (or) receiver.

The sequence of operation for communicating with an I2C slave device is.

1) Master device pulls the clock line (SCL) of the bus to HIGH.

2) Master device pulls data line (SDA) "LOW", when the SCL line is at logic "HIGH".

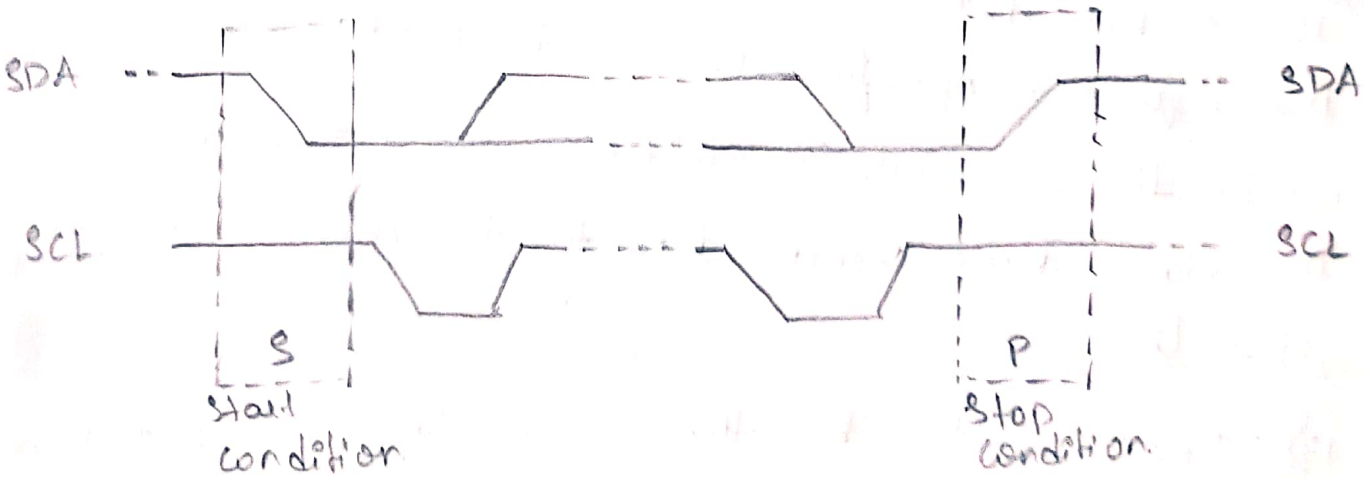

3) Master sends the address (7 bit or 10 bit wide) of the Slave device to which it wants to communicate, over the SDA Line.

Scanned with OKEN Scanner

4) Clock pulses are generated at the SCL line for synchronizing the bit reception by the slave device.

5) The MSB of the data is always transmitted first.

6) The data in the bus is valid during the "HIGH" period of the clock signal.

7) In normal data transfer, the data line only changes state when the clock is low.

8) Master waits for the acknowledgement bit from the slave device whose address is sent on the bus along with the read/write operation command

9) Slave devices connected to the bus compares the address received with the address assigned to them.

10) The slave device with the address requested by the master device responds by sending an aknowledge bit over SDA line.

11) Upon receiving the acknowledge bit, master sends the 8 bit data to the slave device over SDA line, if the requested operation is, "write to device".

12) If the requested operation is "Read from device", the slave device sends data to the master over the SDA line.

13) Master waits for the acknowledgement bit from the device upon byte transfer complete for a write operation and sends an acknowledge bit to the slave device for read operation.

Scanned with OKEN Scanner

4) Master terminates the transfer by pulling the SDA Line, "HIGH" when the clock line SCL is at logic, "HIGH".

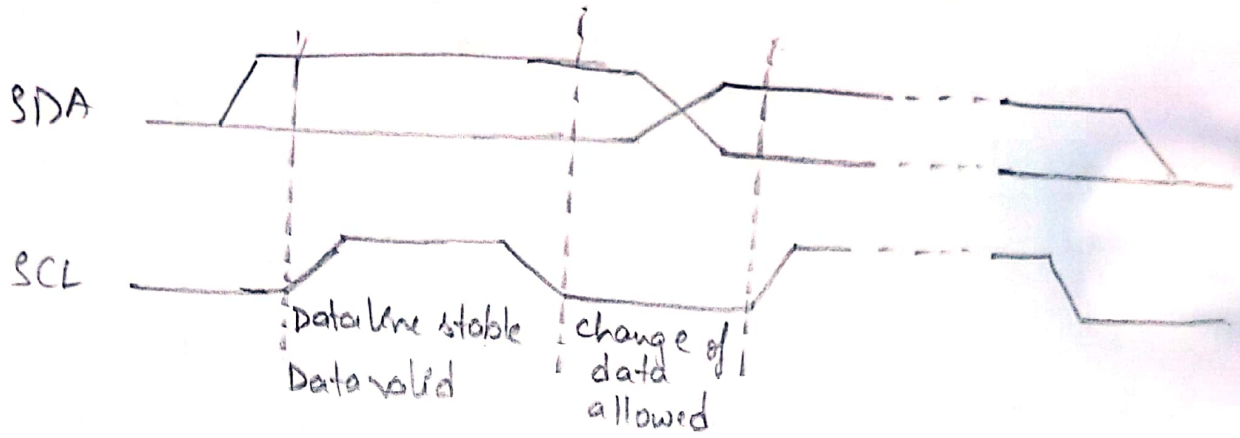

Serial Peripheral Interface (SPI) Bus:-

-> It is a synchronous bi-directional full duplex four wire serial interface bus. This concept introduced by Motorola. SPI is a single master multi-slave system.

-> It is possible to have a system where more than one SPI device can be master, provided the condition only one master device is active at any given point of time, is satisfied.

-> SPI is used to send data between microcontrollers and small peripherals such as shift registers, sensors and SD Cards.

-> SPI requires four signal lines for communication. They are.

Master Out slave In- (MOSI):-

Signal line carrying the data from master to slave device. It is also known as slave input / slave data in (SI / SDI).

Scanned with OKEN Scanner

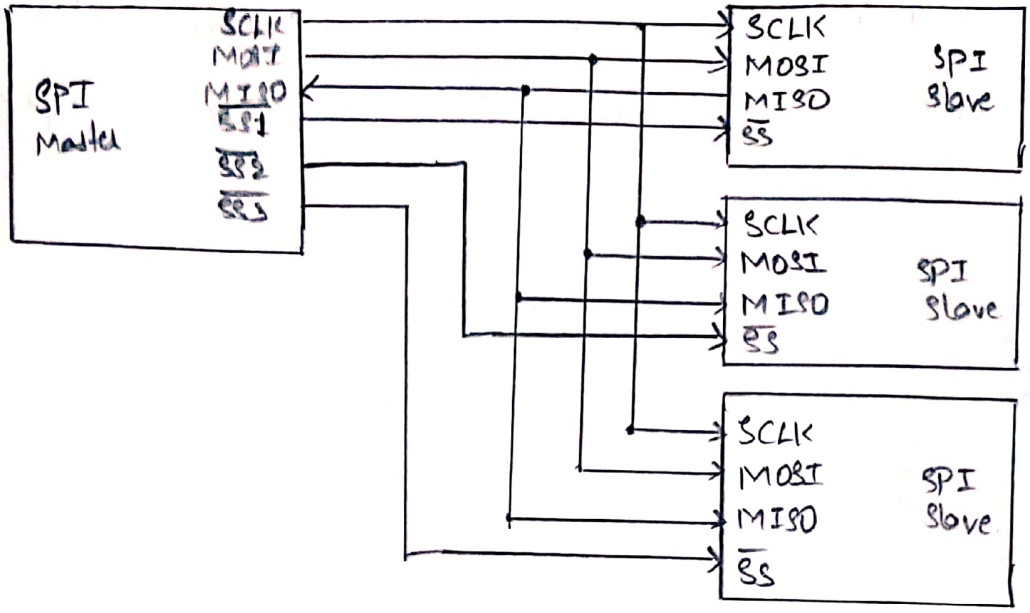

Master In slave out (MISO) :-

Signal line carrying the data from slave to master device. It is also known as slave output (SO/SDO).

Serial Clock (SCLK):-

Signal line carrying the clock signals.

Slave Select (SS) :-

Signal line for slave device select. It is an active low signal.

The master device is responsible for generating the clock signal.

Master device selects the required slave device by asserting the corresponding devices save select signal "LOW".

→ The data out line (MISO) of all the slave devices when not selected floats at high impedance state.

Scanned with OKEN Scanner

* The serial data transmission through SPI Bus is fully Configurable.
* SPI devices contain certain set of registers for holding these configurations.
* The serial peripheral control register holds the various configuration parameters like master/slave selection for the device, baudrate selection for communication, clock signal control etc
* The status register holds the status of various conditions for transmission and reception. SPI works on the principle of "Shift Register".
* The master and slave devices contain a special shift register for the data to transmit or receive.
* The size of the shift register is device dependent. Normally it is a multiple of 8.

* Operation of SPI protocol

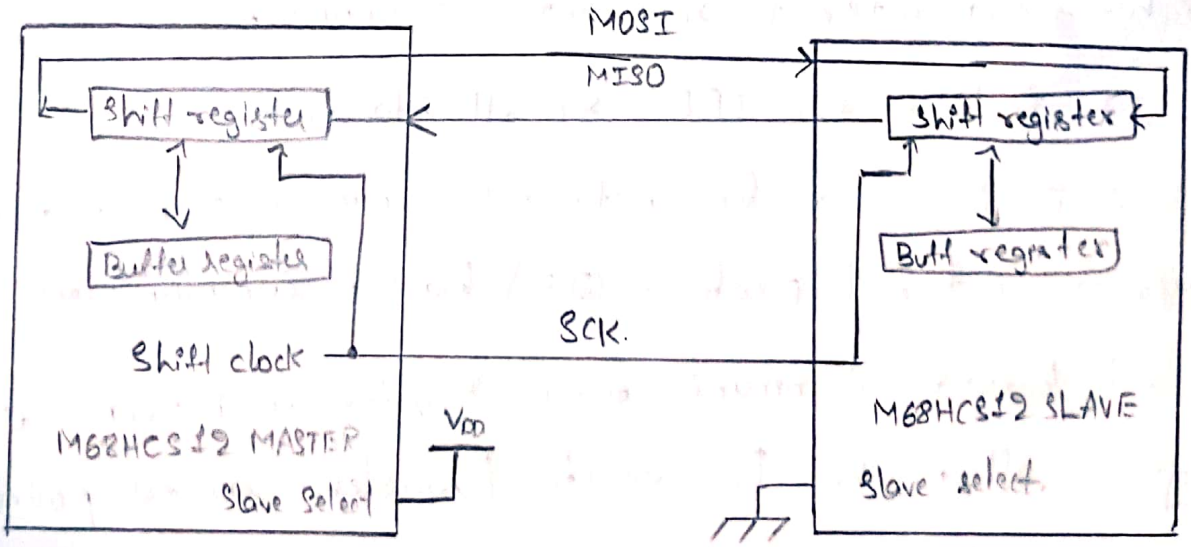

Master/slave serial peripheral interface

Scanned with OKEN Scanner

* During transmission from the master to slave, the data in the master's shift register is shifted out to the MOSI pin and it enters the shift register of the slave device through the MOSI pin of the slave device.

* At the same time the shifted out data bit from the slave device's shift register enters the shift register of the master device through MISO pin.

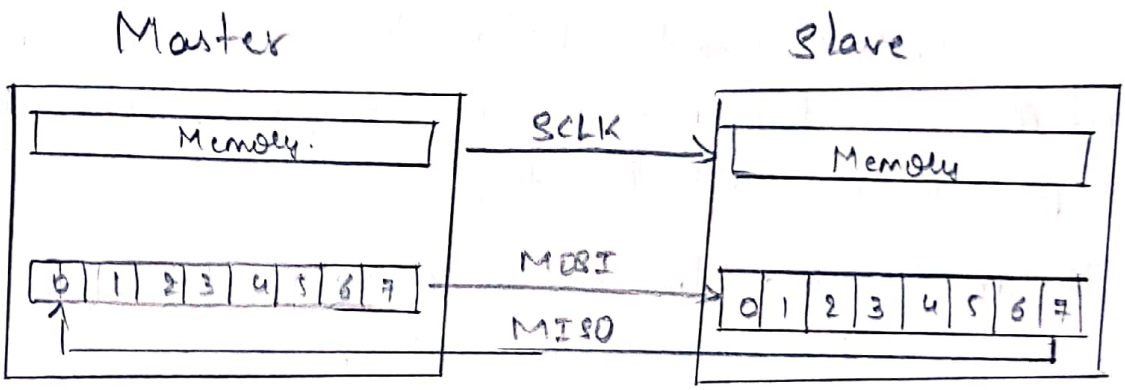

Wifi :-

* Wi-Fi is the name of a popular wireless networking technology that uses radio waves to provide wireless high-speed internet and network connections.

* It follows the IEEE 802.11 standard.

* It is intended for network communication and it supports internet protocol (IP) based communication.

* It based communications require an intermediate agent called Wi-Fi router / wireless access point to manage the communications.

Scanned with OKEN Scanner

* The Wi-Fi router is responsible for restricting the access to a network, assigning IP address to devices on the network, routing data packets to the intended devices on the network.

* It enabled devices contain a wireless adaptor for transmitting and receiving data in the form of radio signals through an antenna.

* It operates at 2.4GHZ or 5GHZ of radio spectrum and they co-exist with other ISM band devices like bluetooth.

* A wi-fi network is identified with a Service set identifier (SSID). A Wi-Fi device can connect to a network by selecting the SSID of the network and by providing the credentials if the network is security enabled.

* Wi-fi networks implements different security mechanisms for authentication and data transfer.

* Wireless Equivalency Protocol (WEP), wireless protected access (WPA) etc are some of the security mechanisms supported by Wi-Fi networks in data communication.

BLUE TOOTH:-

* It is a wireless technology standard for short distances for exchanging data over radio waves in the ISM and mobile devices and building personal area networks (PANs).

* Invented by telecom vendor Ericsson in 1994, it was originally conceived as a wireless alternative to RS-232 data cables.

Scanned with OKEN Scanner

* Bluetooth uses a radio technology called frequency-hopping spread spectrum.

* It divides transmitted data into packets, and transmits each packet on one of 79 designated bluetooth channels. Each channel has a bandwith of 1MHz.

* It usually performs 800 hops per second, with Adaptive Frequency-Hopping (AFH) enabled.

* Bluetooth is a packet-based protocol with a master-slave structure.

* One master may communicate with up to seven slaves in a piconet. All devices share the master's clock.

* Packet exchange is based on the basic clock, defined by master, which ticks at 312.5 µs intervals.

* A master BR/EDR bluetooth device can communicate with a maximum of seven devices ~~on~~ in a piconet, though not all devices reach this maximum.

* The devices can switch roles, by agreement and the slave can become the master.

ZIGBEE:-

* ZIGBEE is an IEEE 802.15.4-based specification for suite of high-level communication protocols used to create personal area networks with small, low-power digital radios such as for home automation, medical device data collection, and other low-power low-bandwidth needs designed for small scale projects which need wireless connection.

Scanned with OKEN Scanner

* Hence, Zigbee is a low-power, low data rate and close proximity wireless ad hoc network.
* The technology defined by the Zigbee specification is intended to be simpler and less expensive than other wireless personal area networks (WPANs), such as bluetooth or Wi-Fi.
* Applications include wireless light switches, electrical meters with in-home-displays, traffic management systems, and other consumer and industrial equipment that require short-range low-rate wireless data transfer.
* Its low power consumption limits transmission distances to 10-100 meters line of sight, depending on power output and environmental characteristics.
* Zigbee devices can transmit data over long distances by passing data through a mesh network of intermediate devices to reach more distant ones.

Zigbee Coordinator:-

It acts as the root of the Zigbee network. The ZC is responsible for initiating the Zigbee network and it has the capability to store information about the network.

Zigbee Router:-

Responsible for passing information from device to another device or to another ZR.

Zigbee end devices:-

End device containing zigbee functionality for data communication. It can talk only with a ZR or ZC and doesn't have the capability to act as a mediator for transferring data from one device to another.

Scanned with OKEN Scanner

* Zegbee supports an operating distance of up to 100 meters at a data rate of 20 to 250 Kbps.

Elements of embedded systems:-

* An embedded system is a combination of 3 things hardware software mechanical components and it is supposed to do one specific task only.
* A typical embedded system contains a single chip controller which acts as the master brain of the system. Diagrammatically an embedded system can be represented as follows:

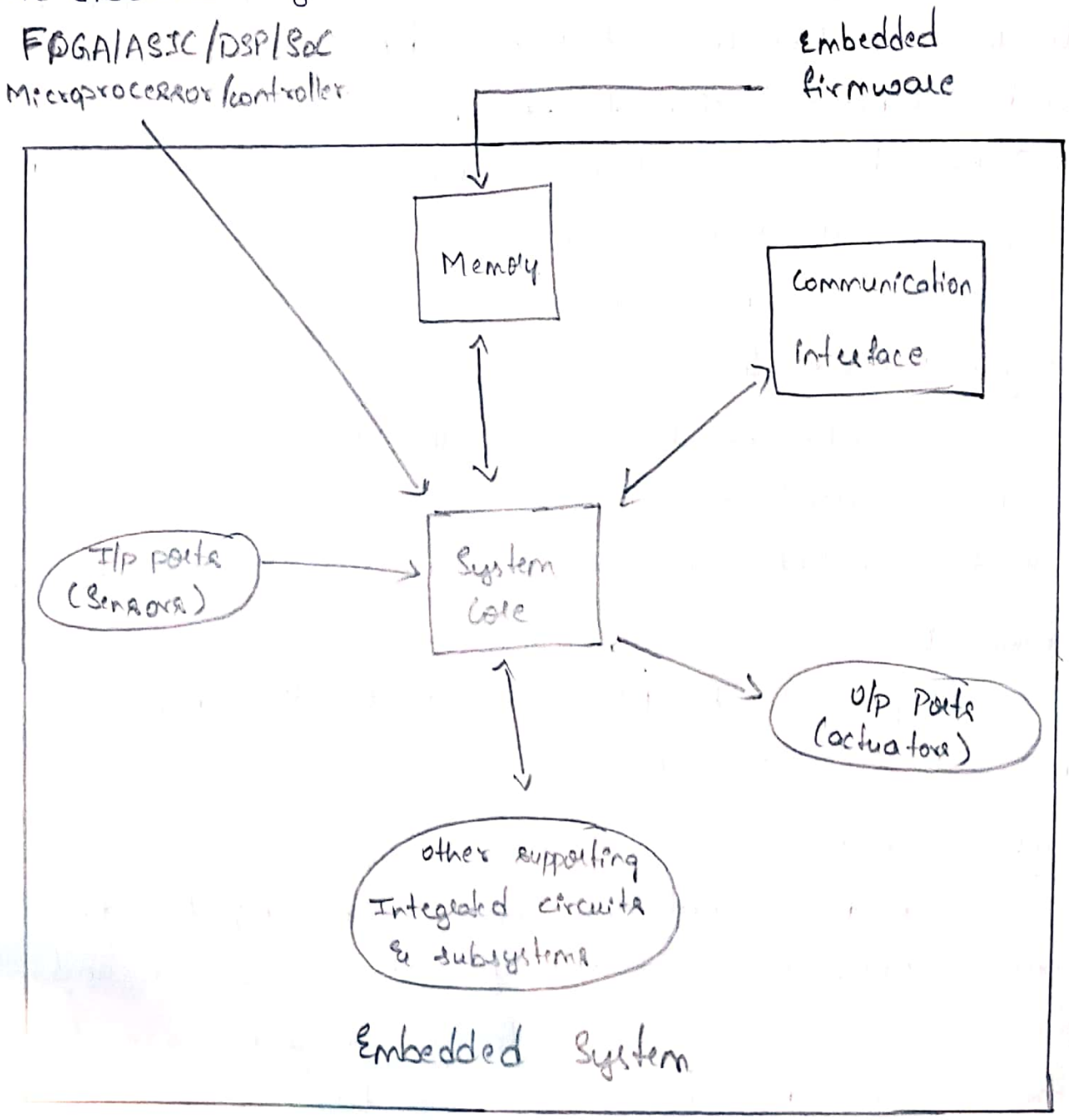

Embedded System

Scanned with OKEN Scanner

* They are basically designed to regulate a physical variable or to manipulate the state of some devices by sending some signals to the actuators or devices connected to the output port system.

* Hence the embedded systems can be viewed as a reactive system.

* The control is achieved by processing the information coming from the sensors and user interfaces and controlling some actuators that regulate the physical variable.

* Keyboards, push button, switches etc are examples of common user interface input devices and LEDs, LCDs, Piezoelectric buzzers etc examples for common user interface output devices for a typical embedded system.

* Some embedded systems do not require any manual intervention for their operation. They automatically sense the input parameters from real world through sensors which are connected at input port.

* The sensor information is passed to the processor after signal conditioning and digitization.

* The memory of the system is responsible for holding the code. There are two types of memories are used in any embedded system.

* Fixed memory (ROM) is used for storing code or program. The user cannot change the firmware in this type of memory.

Scanned with OKEN Scanner

* The most common types of memories used in embedded systems for control algorithm storage are OTP, PROM, UVEPROM, EEPROM and FLASH.

* An embedded system without code implemented memory has all the peripherals but is not capable of making decisions depending on the situational as well as real world changes.

* Memory for implementing the code may be present on the processor or may be implemented as a separate chip interfacing the processor.

* In a controller based embedded system, the controller may contain ~~international~~ internal memory for storing code such as controllers are called micro-controllers with on-chip ROM, ex:- Atmel AT89C51.

Scanned with OKEN Scanner