RF System Architecture in MRI Systems

- JANGAM GAYATHRI - 2301EC10 (9346991755)
- VENNAMANENI NIHARIKA - 2301EC16
- SHREYA SINGH - 2302VL10
- NAGULWAD SAMEEKSHA - 2301EC23
- LAGUDU SINDHU - 2301EC27

RF System Architecture in MRI

MRI RF Subsystem:

The RF system in MRI is responsible for exciting hydrogen nuclei and detecting the signals they emit. It functions at the Larmor frequency, which is determined by the magnetic field strength and the gyromagnetic ratio of hydrogen.

Functions of the RF Chain:

- Generate RF pulses at the Larmor frequency to excite spins.
- Deliver sufficient power through the transmit coil to create the B_1 field.
- Capture weak RF signals emitted by hydrogen nuclei during relaxation.
- Amplify signals with minimal noise using LNAs.
- Convert RF signals to baseband for digitization and image reconstruction.

INTRODUCTION & MOTIVATION

MRI is a non-invasive imaging technique that combines magnetic fields, gradient systems, and radiofrequency (RF) pulses to produce detailed internal images. The RF subsystem excites hydrogen nuclei at the Larmor frequency and detects their emitted signals, enabling image reconstruction.

- **Central Role:** The RF subsystem governs excitation and detection, directly shaping image clarity.
- **Clinical Impact:** Provides superior soft-tissue contrast, vital for neurology, cardiology, and oncology.
- **Efficiency & Safety:** Optimized RF power ensures faster scans while maintaining patient safety.
- **Innovation:** Advances in RF amplifiers, detectors, and digitizers reduce artifacts and enable GPU-accelerated reconstruction.

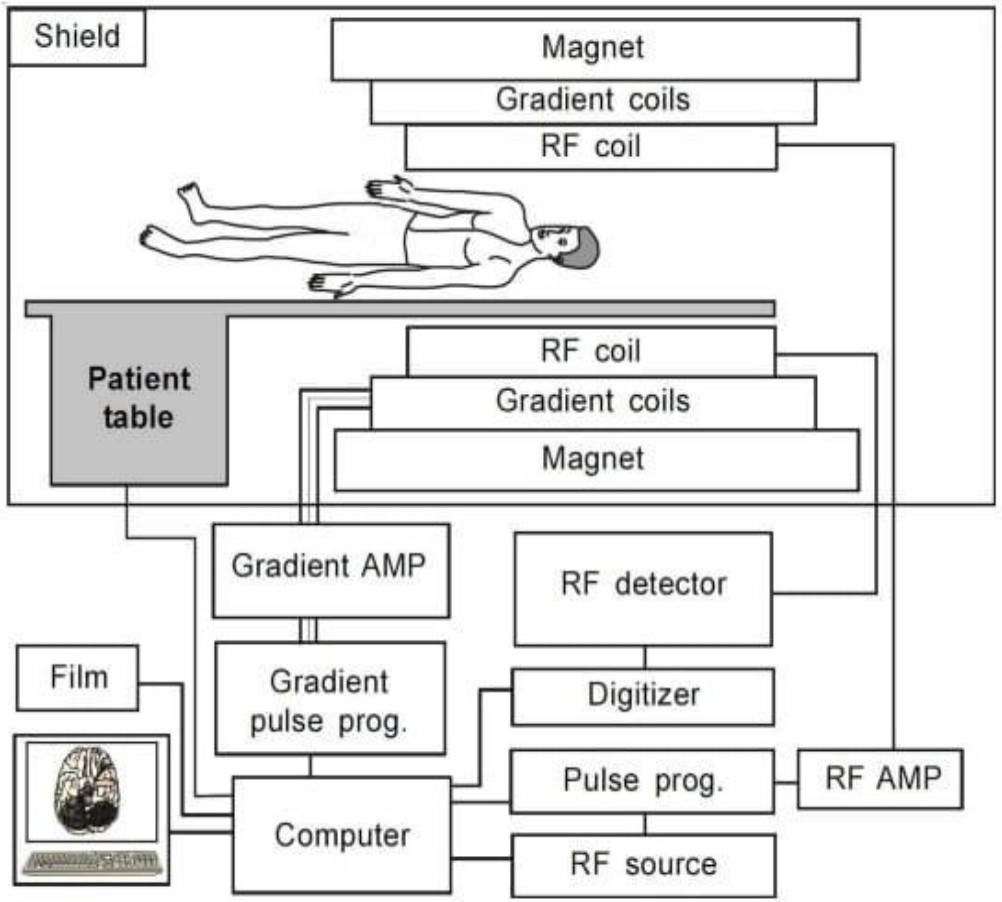

Human Body as an RF Signal Source in MRI

- Body is **~60–70% water → rich in hydrogen**
- Hydrogen proton →**acts as RF-active magnetic dipole**
- In magnetic field (B_0) → spins **align & precess**
- RF at **Larmor frequency** → **resonance & excitation**
- After RF OFF → spins **emit RF signals (μV)**

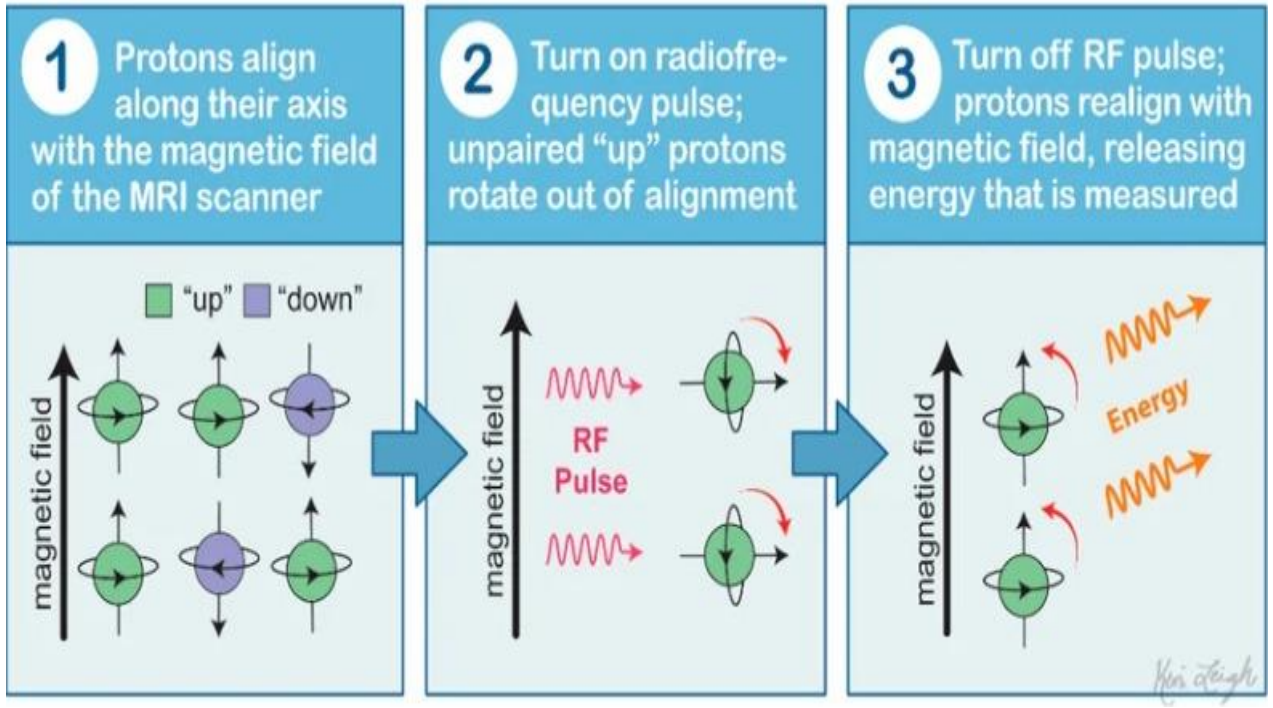

"The human body acts as an RF signal source in MRI ”

“MRI converts microscopic hydrogen spin behavior into measurable RF signals.”

RF Frequency Synthesizer

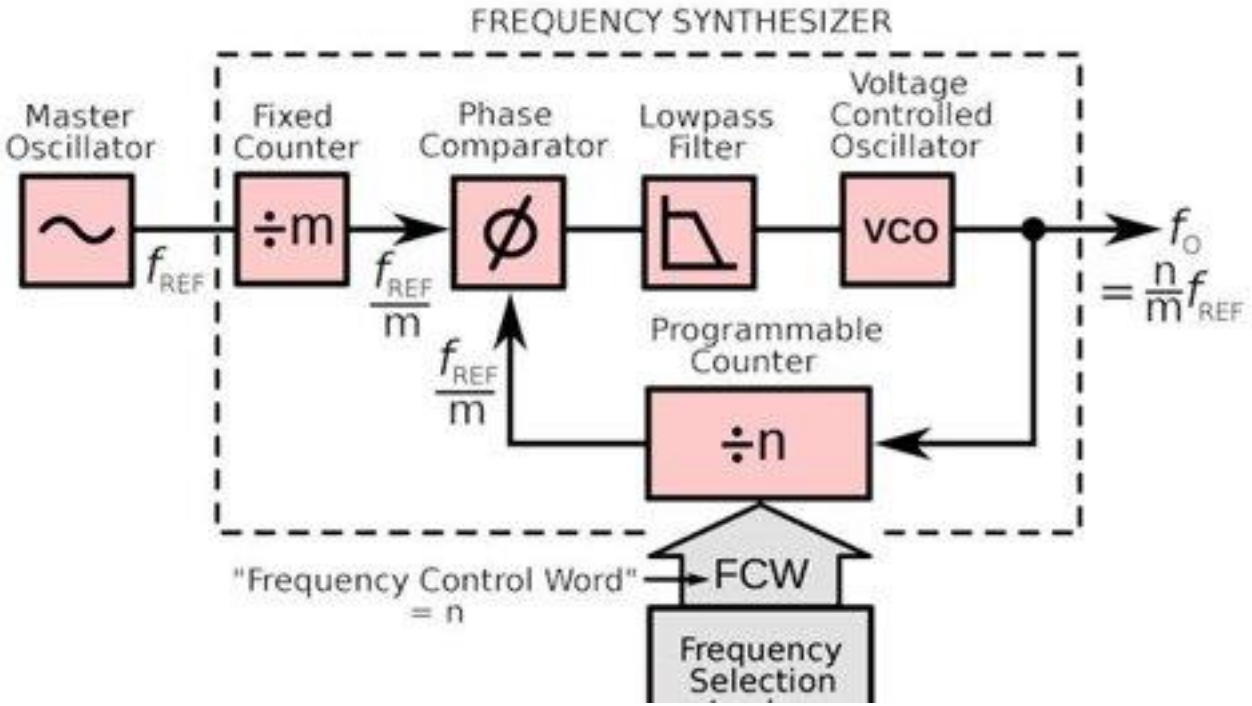

<u>RF Frequency Synthesizer</u>

The **RF frequency synthesizer** is the starting block of the MRI RF system.

What does it do?

- It generates a very precise RF signal at the **Larmor frequency**

<u>Larmor Frequency</u>

Larmor frequency is the frequency at which **hydrogen nuclei rotate** in a magnetic field.

Why it matters in MRI?

- Hydrogen atoms behave like tiny magnets
- In a magnetic field (B_0), they rotate at a specific frequency
- MRI must apply RF signal at **exact same frequency**

$$f=\gamma B$$

<u>Working</u>

- **Master Oscillator** → provides reference frequency Fref
- **Divider (÷m)** → scales reference signal
- **Phase Comparator** → compares reference and feedback
- **Low Pass Filter** → generates control voltage
- **VCO** → produces output frequency f0f_0f0
- **Divider (÷n)** → feeds back signal

RF Coils

RF coils act as **antennas** in MRI systems

- Perform both:
- **Transmission (Tx)** of RF pulses
- **Reception (Rx)** of MR signals

Magnetization & RF Excitation

- Human body aligns with **main magnetic field (B_0)**
- RF coil generates **B_1 field ($\perp$ to B_0)**
- RF pulse **tilts magnetization** → called **Flip Angle (θ)**

Signal Generation

- Excited nuclei **precess at Larmor frequency**
- This induces **current in receive coil**
- Induced current = **MRI signal**

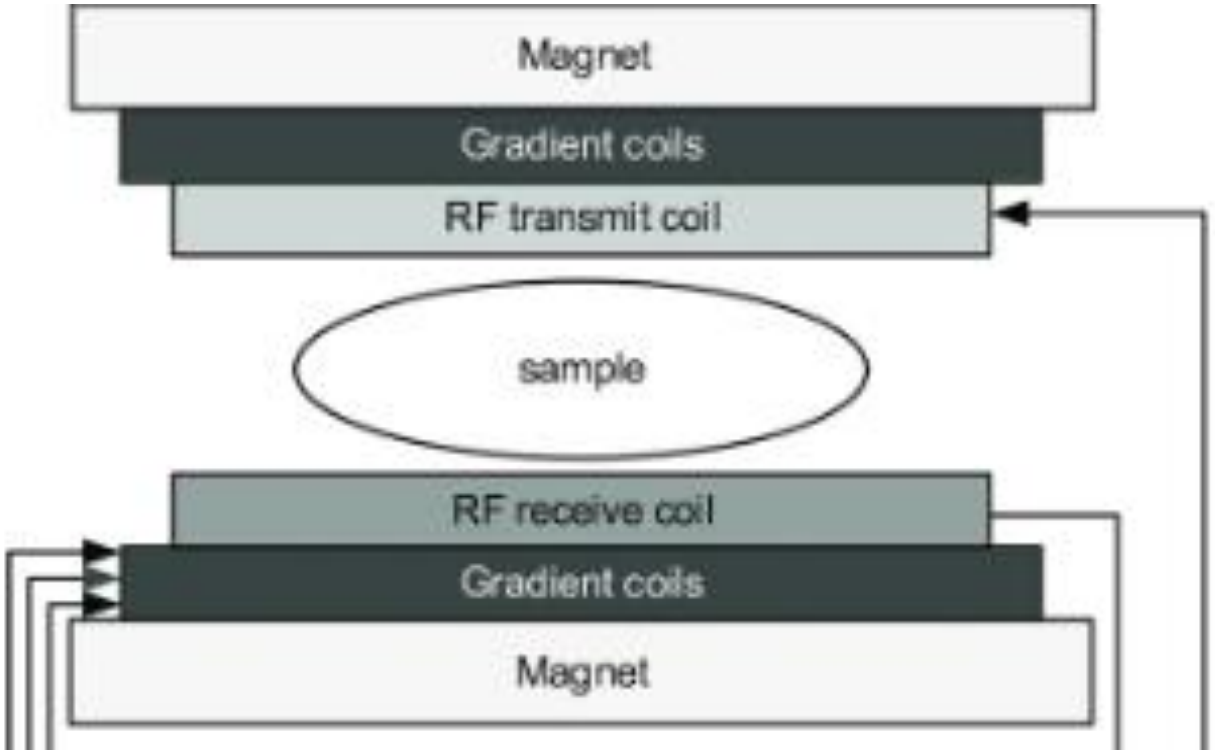

RF Coil as Resonant Circuit

- Acts as **RLC circuit (Inductor + Capacitor)**
- Designed to operate at **Larmor frequency**

Tuning & Matching

- Tuning → matches resonance to Larmor frequency
- Impedance Matching → ensures maximum power transfer

Signal Amplification

- MR signal is very weak (**millivolts**)
- Amplified using **Low Noise Preamplifier**

Decoupling

- Rx coil must be **disabled during transmission**
- Prevents interference and damage
- Achieved using **detuning circuits (PIN diode + LC)**

Gruber et al.: RF Co

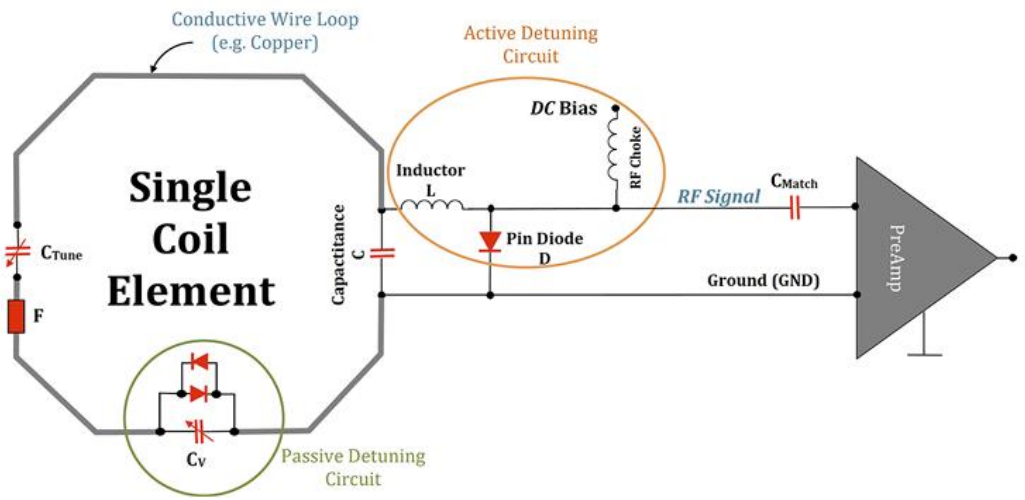

Low Noise Amplifier (LNA) in MRI

Purpose:

- Amplifies weak RF signals from hydrogen nuclei.
- Adds minimal noise, preserves signal quality.
- Prepares signal for demodulation & digitization.

Why Important:

- MRI signals are very weak.
- Improves **Signal-to-Noise Ratio** (SNR).

Hydrogen Signals:

- Hydrogen atoms are like tiny magnets.
- In Magnetic Field (B_0)
- Rotate at **Larmor** Frequency.

Working of LNA

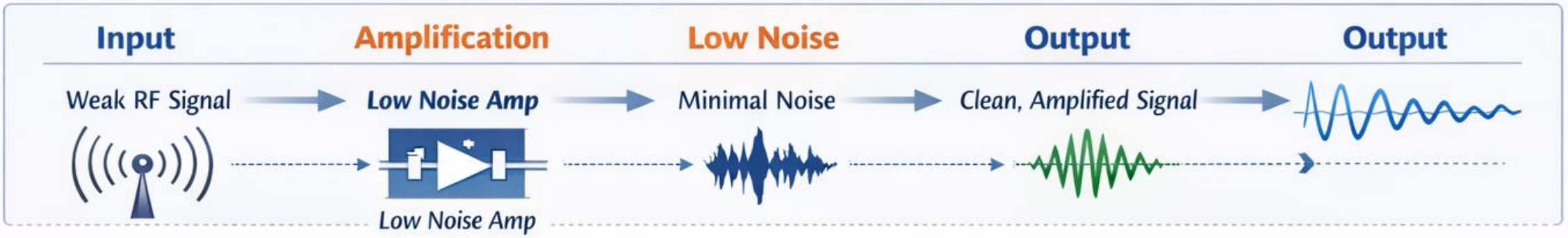

Mixer & Demodulation in MRI RF Receiver

- MRI signals are weak & high frequency (MHz)
- Mixer and LO converts to baseband
- I/Q demodulation extracts:
  - Amplitude
  - Phase

RF → Mixer → Baseband → I/Q → Digital Signal

"phase information is used in spatial encoding in MRI"

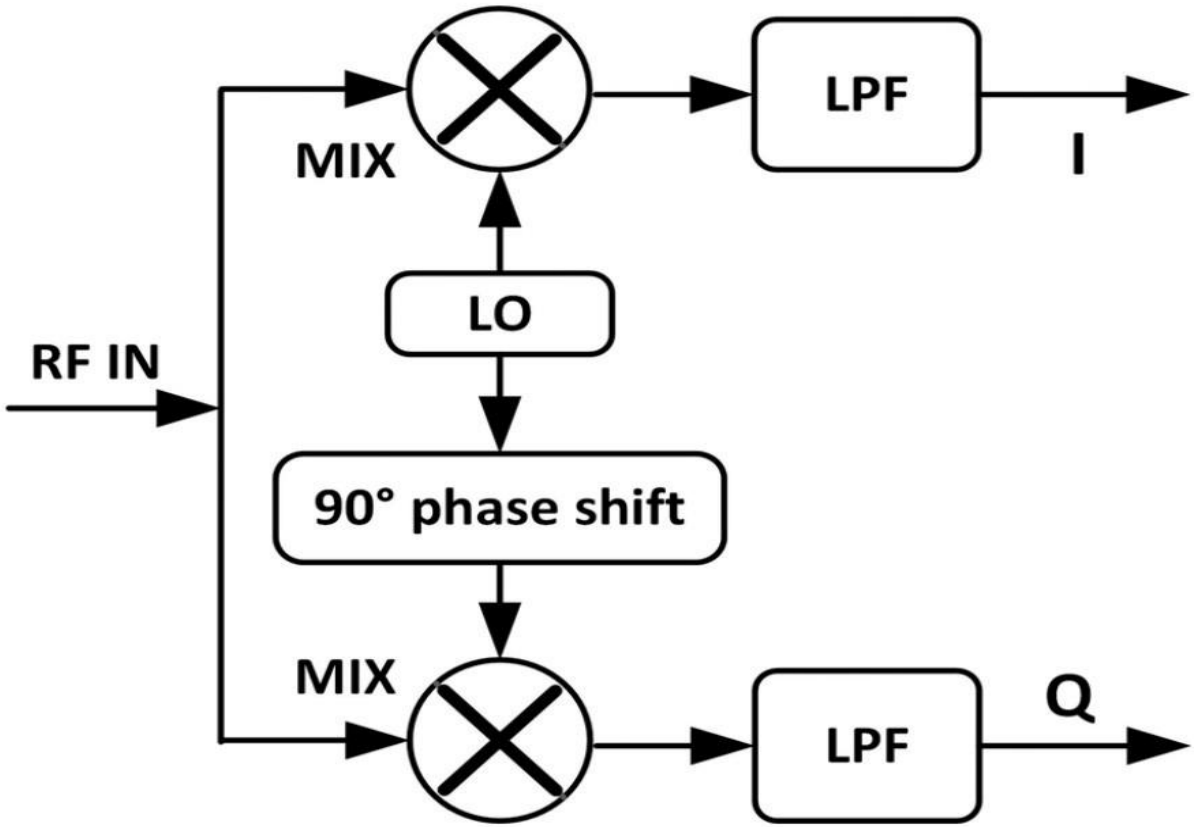

"MRI is essentially a phase-sensitive RF detection system."

"Mixer converts frequency, while demodulation extracts information from MRI signals."

RF Signal Digitization & Image Formation in MRI

- Weak analog **MR RF signals** are received by RF coils after excitation.
- Complex **I & Q signals → digitized using high-speed ADC**.

Digitization Needs:
- Anti-aliasing filter
- Nyquist sampling (fs≥2B)
- Higher ADC resolution → **better image quality**

k-Space Acquisition:
- RF data stored in **spatial frequency domain**
- **Center → contrast | Edges → resolution**

Image Reconstruction:
- k-space → **IFFT → MRI Image**
- Noise & phase corrections applied

➢ Thus, weak analog RF MR signals are digitalized, mapped in k-space, and reconstructed into the final MRI image using inverse Fourier processing

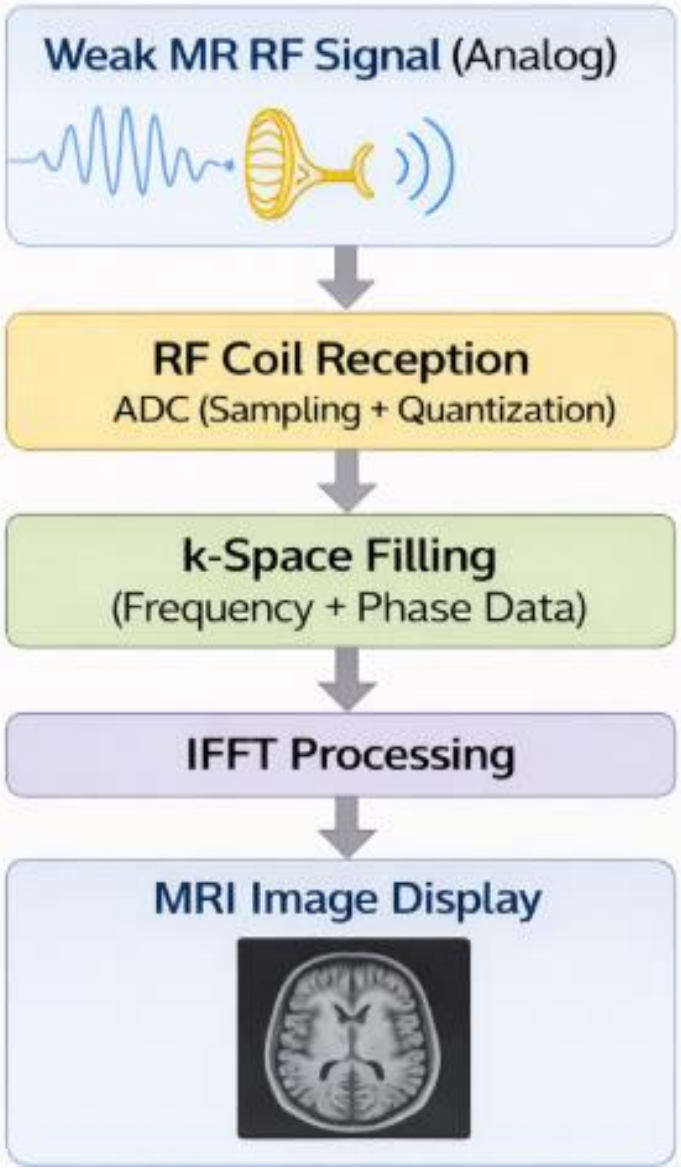

Design Challenges in MRI Systems

Impedance Matching
Ensures maximum power transfer from RF amplifier to coil. Mismatch causes power reflection and reduced efficiency

Noise & SNR
MRI signals are very weak and noise can degrade image quality. High SNR is needed for clear and accurate images.

Coil Coupling
Interference between transmit and receive coils can distort signals. Proper isolation is required for accurate signal reception.

Heating (SAR limits)
RF energy absorbed by the body can increase tissue temperature, so Specific Absorption Rate (SAR) must be limited to ensure patient safety.

Field Uniformity
Non-uniform B_1 magnetic field leads to uneven excitation of tissues, resulting in image distortion and intensity variation.

Size vs Sensitivity Trade-off
Smaller coils provide higher SNR and better resolution, but cover a limited area, whereas larger coils offer wider coverage but lower sensitivity.

Applications

- **Brain imaging**-MRI RF systems provide high-resolution images of the brain, helping detect neurological disorders like tumors, stroke, and epilepsy.
- **Tumor detection**-RF-based MRI enables accurate identification and localization of tumors by distinguishing between healthy and abnormal tissues.
- **Cardiac imaging-**Used to obtain detailed images of the heart structure and blood flow, aiding in diagnosis of cardiovascular diseases.
- **Musculoskeletal analysis-**Helps visualize bones, joints, muscles, and ligaments, useful in detecting injuries and degenerative diseases.

Future Scope

- **Ultra-high field MRI (7T+)**-Provides higher signal-to-noise ratio (SNR) and ultra-high resolution images for improved diagnosis.
- **AI-based image reconstruction**-Uses machine learning algorithms to enhance image quality and reduce scan time.
- **Advanced RF coil arrays-**Employs multiple coil elements to improve coverage, sensitivity, and parallel imaging performance.
- **Faster and portable MRI systems-**Focuses on reducing scan time and developing compact, low-cost MRI systems for wider accessibility.

Conclusion

- RF systems are a core component of MRI, enabling signal transmission and reception

- RF coils function as efficient Tx/Rx antennas, directly influencing system performance

- Image quality is primarily governed by:
  -> SNR (Signal-to-Noise Ratio)
  -> Tuning & Impedance Matching

- Key challenges such as coil coupling, SAR heating, and field non-uniformity must be carefully managed

- MRI RF systems enable safe, non-invasive and high-resolution imaging

References

- Gruber et al., *RF Coils: A Practical Guide for Nonphysicists*, JMRI, 2018