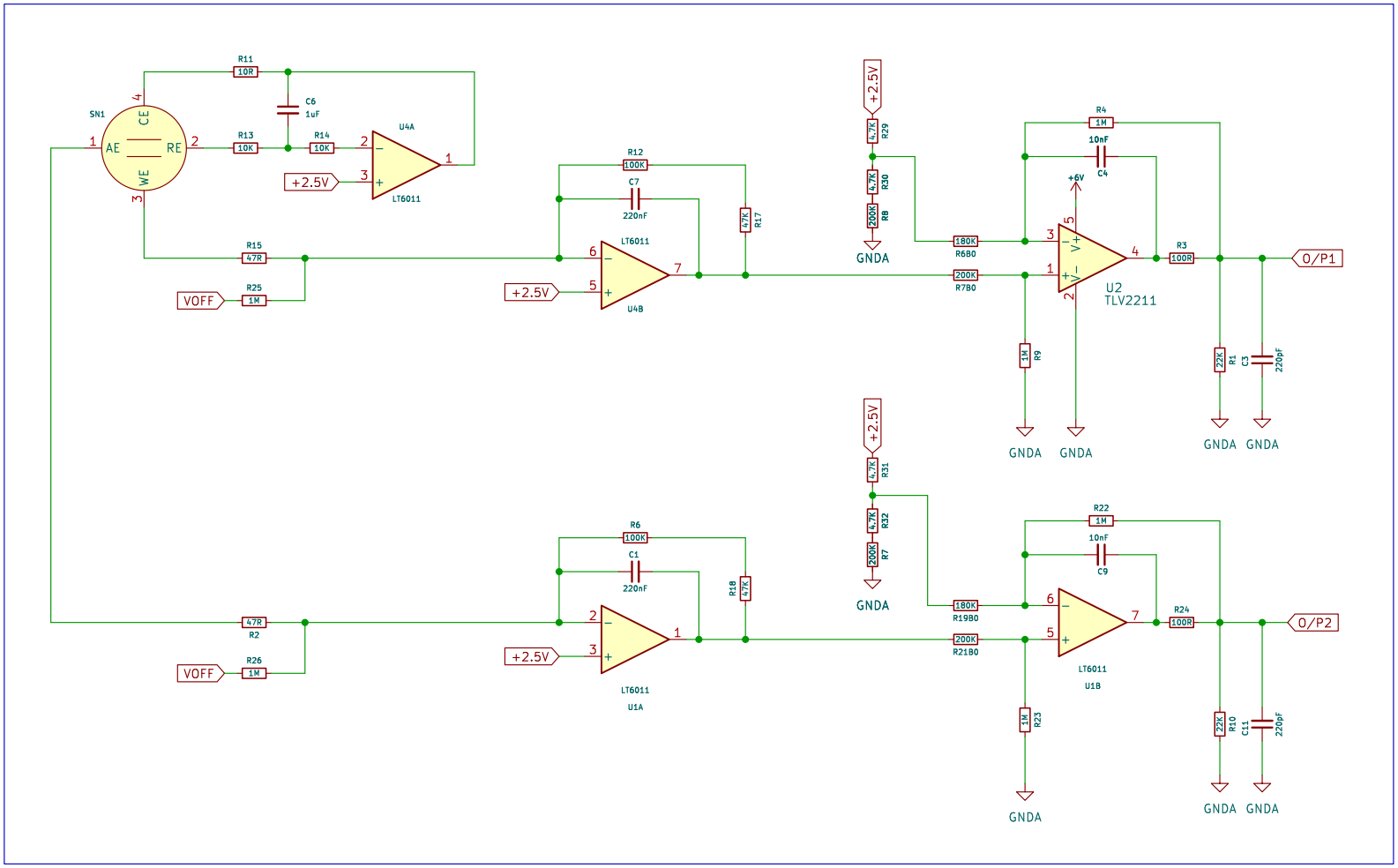

LT6011 Power

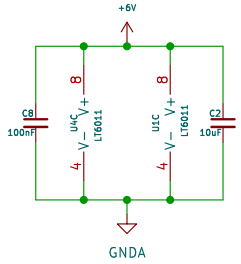

OGS Footprint

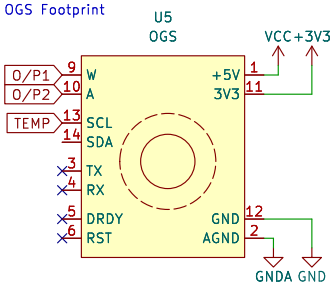

Temprature Sensor

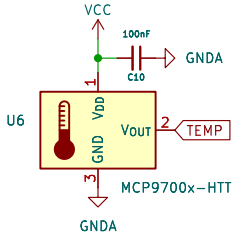

2.5V Reference

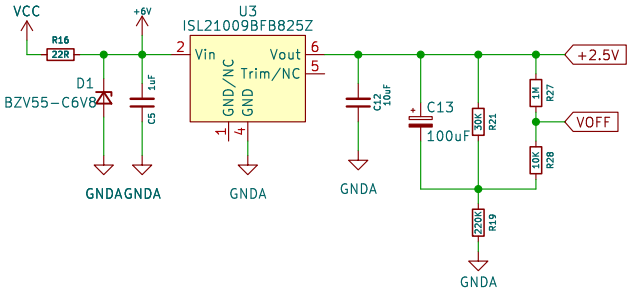

H2S / CO / SO2

Oizom Instruments Private Limited

Sheet: /

File: OZ_AFE_1.kicad_sch

Title: OGS_Board

Size: A4	Date: 2024-09-09	**Rev: 1**
KiCad E.D.A. 9.0.2		Id: 1/1