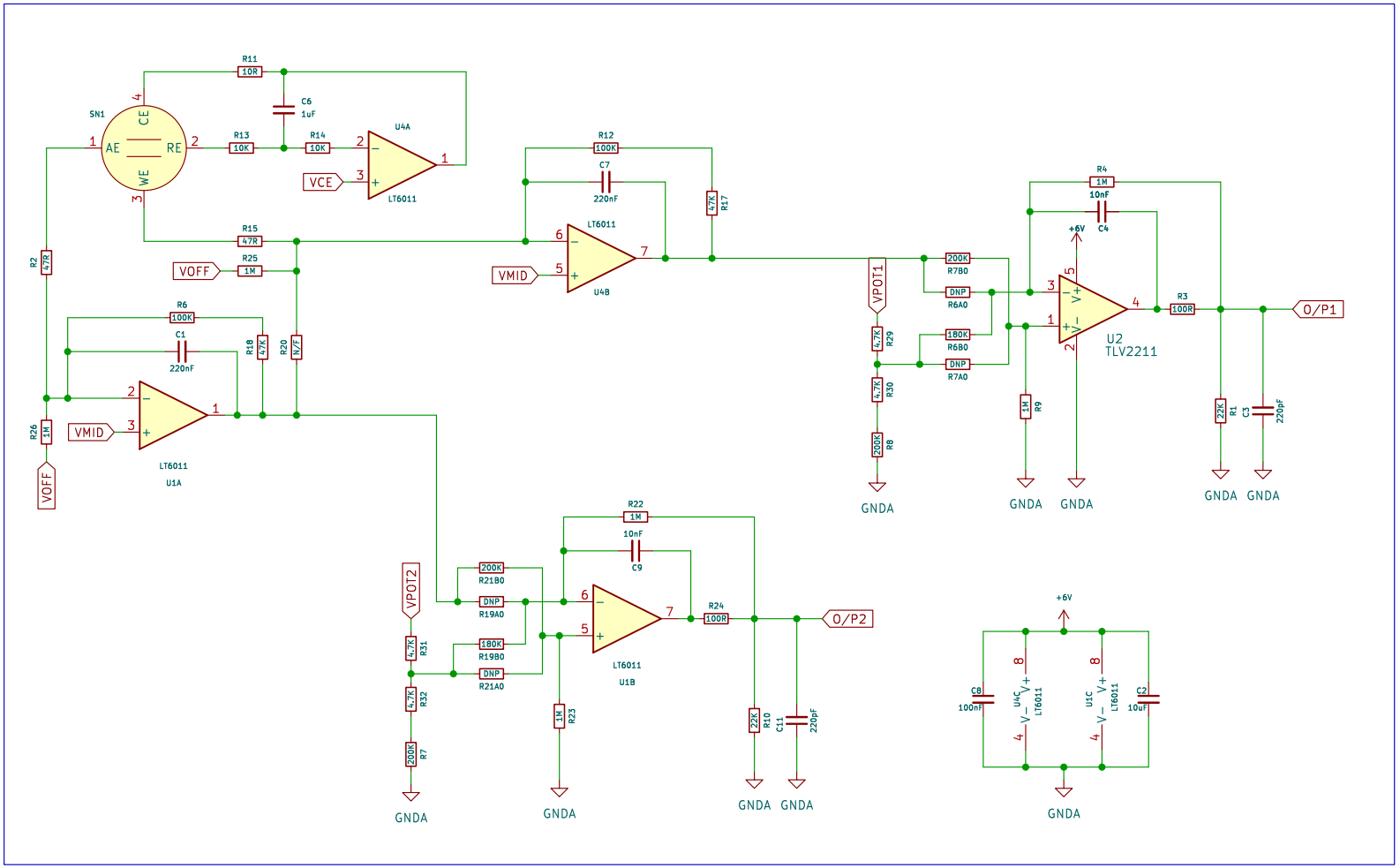


OGS Footprint

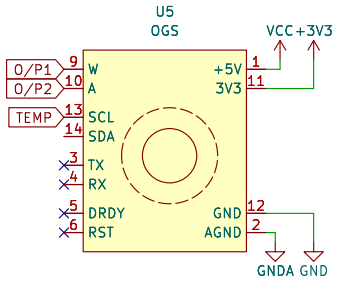


Temprature Sensor

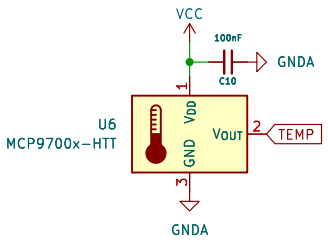


Reference

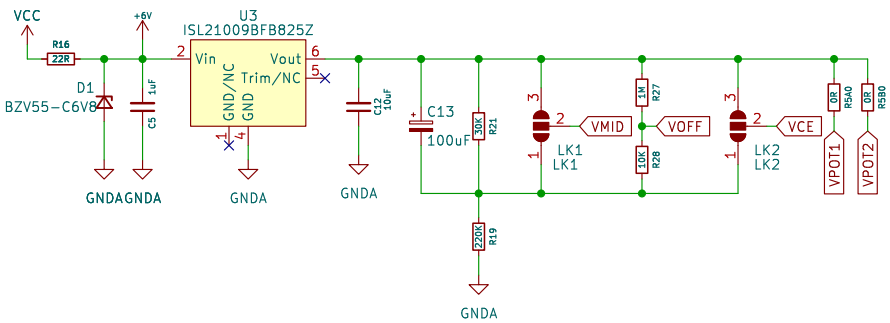


H2S / CO / SO2

**Oizom Instruments Private Limited**

Sheet: /

File: OGS_B4_ISB1.kicad_sch

***Title: OGS_Board***

| | | |
|---|---|---|
| Size: A4 | Date: 2024-09-09 | **Rev: 1** |
| KiCad E.D.A. 8.0.4 | | Id: 1/1 |