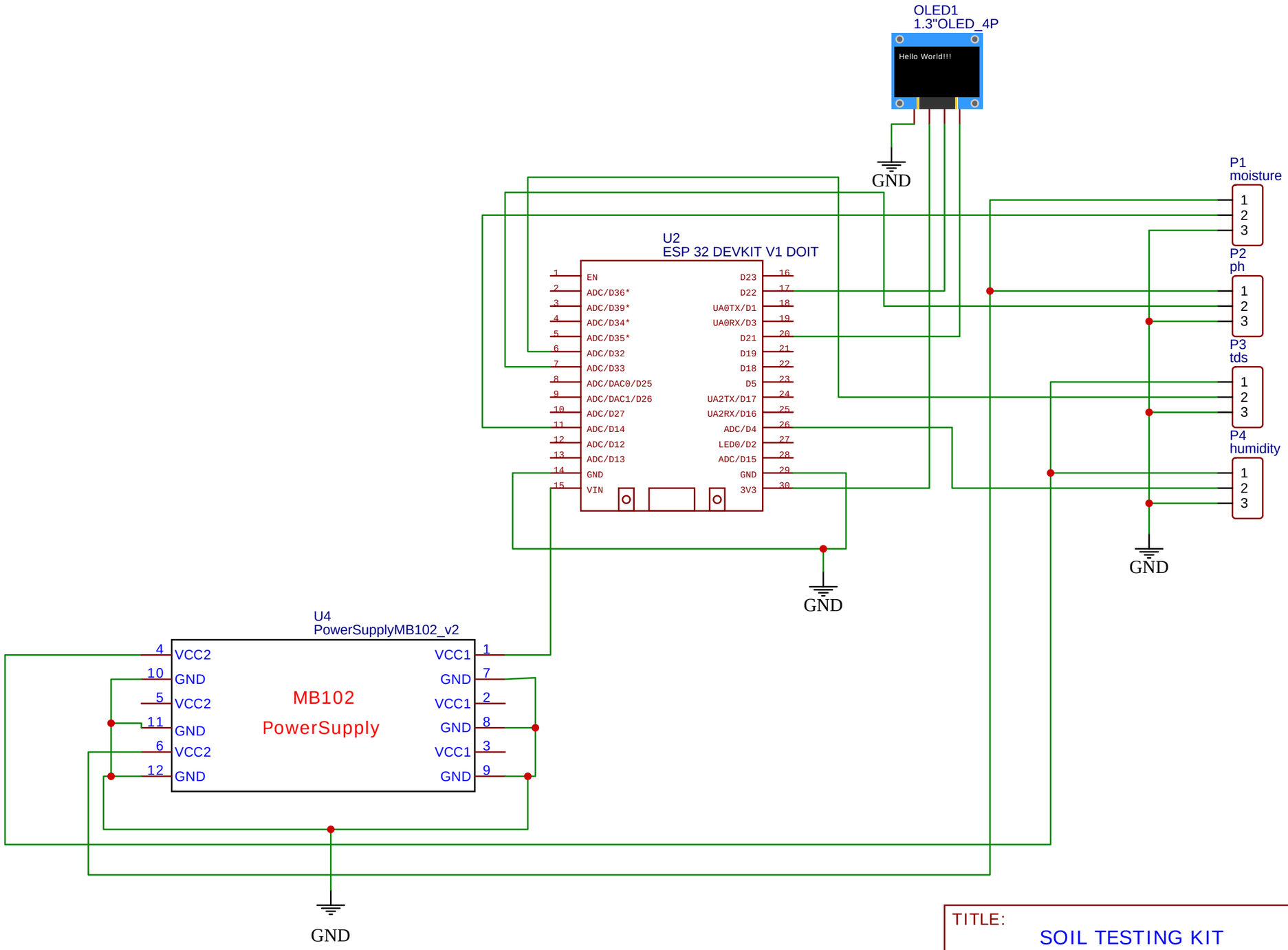

TITLE: SOIL TESTING KIT	REV: 1.0
Company: AGROTECH	Sheet: 1/1
Date: 15/01/2024 Drawn By: shrihari	