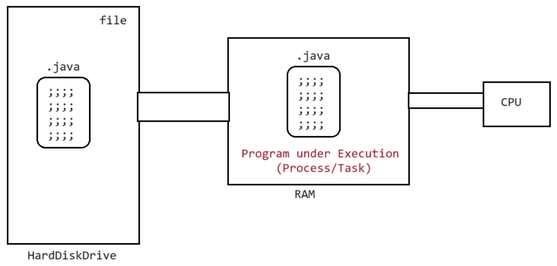

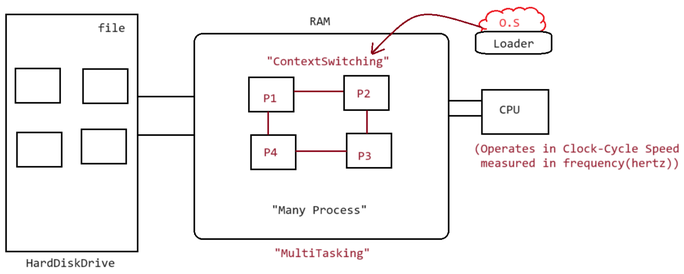

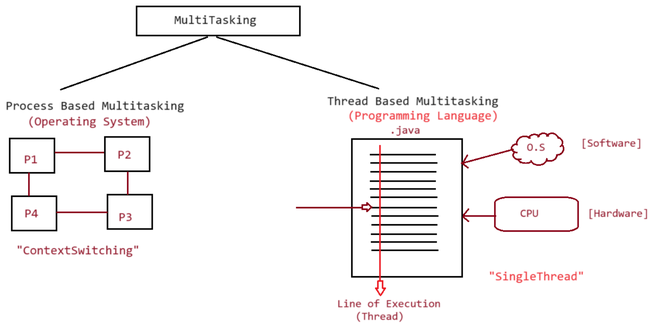

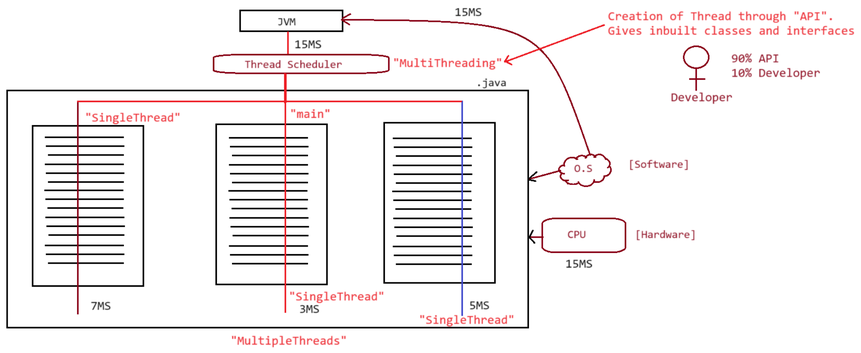

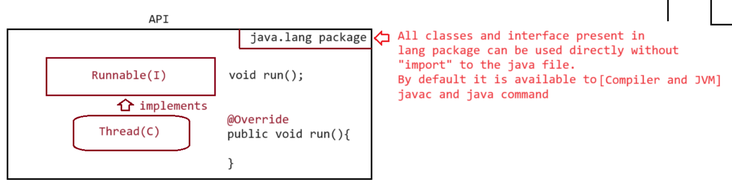


```
class MyThread extends Thread
{
        @Override
        public void run()
        {

        }
}
```

Define a Thread
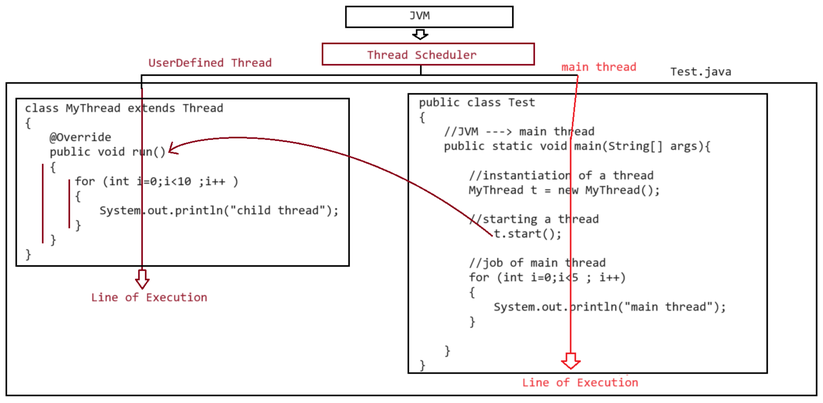
Job of a thread