IOT BASED HAZARDOUS GAS MONITORING SYSTEM

A Minor Project-I Report (IT-508) Section B
in partial fulfilment for the award of the degree

of

BACHELOR OF ENGINEERING

IN

INFORMATION TECHNOLOGY

Submitted By:

Prajwal Rajput (0103IT181079)
Shruti Verma (0103IT181107)

Group No.- 13

Guided By:
Prof. Kamlesh Chandravanshi

at

LAKSHMI NARAIN COLLEGE OF TECHNOLOGY

KALCHURI NAGAR, RAISEN ROAD, BHOPAL (INDIA) - 462021

SESSION JULY-DECEMBER 2018

DECLARATION

I hereby declare that the project entitled "**IOT Based Hazardous Gas Monitoring System**" submitted for the B.E. (Information Technology) degree is **our** original work and the project has not formed the basis for the award of any other degree, diploma, fellowship or any other similar titles.

Name & Signature of the students with date

Place: Bhopal

(1) Prajwal Rajput

Date:

(2) Shruti Verma

CERTIFICATE

This is to certify that the project titled "**IOT Based Hazardous Gas Monitoring System**" is the bona fide work carried out by **Prajwal Rajput(0103IT181079) and Shruti Verma(0103IT181107) are** students of B.E.(Information Technology) of Lakshmi Narain College of Technology, Bhopal affiliated to Rajiv Gandhi Proudyogiki Vishwavidyalaya, Bhopal, Madhya Pradesh (India) during the academic year 2020-21, in partial fulfilment of the requirements for the award of the degree of Bachelor of Engineering (**Information Technology**) and that the project has not formed the basis for the award previously of any other degree, diploma, fellowship or any other similar title.

Signature & Seal of HOD, Information Technology **Signature of guide with date**

Lakshmi Narain College of Technology, Bhopal

Signature & Seal of the Principal

Lakshmi Narain College of technology, Bhopal

ACKNOWLEDGEMENT

We would like to express my deepest appreciation to all those who provided me the possibility to complete this report. A special gratitude we give to our project guide, Prof. Kamlesh Chandravanshi sir, whose contribution in stimulating suggestions and encouragement, helped me to coordinate my project especially in writing this report.

Furthermore, We would also like to acknowledge with much appreciation the crucial role of AICRA Tacthub, 30 days internship by Prof. Sumit Chatterjee sir, who teach us how modules work, give us ideas on live projects. Thanks to the Guide of the project, Prof. Kamlesh Chandravanshi sir, whose have invested his full effort in guiding the team in achieving the goal. We would like to express our thanks to all the authors who submitted papers related to Gas sensor and also special thanks to all of my valuable professors who made us to involve in this project by their encouragement.

ABSTRACT

Safety plays a major role in today's world and it is necessary that good safety systems are to be implemented in places of education and work. This work modifies the existing safety model installed in industries and this system also be used in homes and offices. The main objective of the work is designing microcontroller based toxic gas detecting and alerting system. The hazardous gases like LPG and propane were sensed and displayed and give alert notification on mobile app. If these gases exceed the normal level then an alarm is generated immediately and also an alert message is sent to the authorized person through Blynk. The advantage of this automated detection and alerting system over the manual method is that it offers quick response time and accurate detection of an emergency and in turn leading faster diffusion of the critical situation.

Keywords- NodeMCU, Gas Sensor, Blynk

LIST OF FIGURES

Figure Name **Page No.**

Figure 1 Implementation of Hazardous Gas Monitoring System……3
Figure 2 Basic Work-Flow of IoT……5
Figure 3 Flowchart……...6
Figure 4 Circuit Design of Hazardous gas monitoring system……7
Figure 5 Shown Gas level on Serial monitor……..10
Figure 6 Gas level on Blynk Application……10

TABLE OF CONTENTS

Title **Page no.**

Title Page……. i

Declaration of the student…… ii

Certificate of the Guide…… iii

Abstract…… iv

Acknowledgement…… v

List of Figures…….. vi

Table of Contents……. vii

1. INTRODUCTION…… 1-2

1.1. Problem Definition……. 1

1.2. Project Overview…… 1

1.3. Hardware Specification…….. 1

1.4. Software Specification……... 2

2. LITERATURE SURVEY…… 3-4

2.1. Existing System…….. 3

2.2. Proposed System…… 3

2.3. Feasibility Study…… 4

3. SYSTEM ANALYSIS & DESIGN…… 5-8

3.1. Requirement Specification…… 5

3.2. Flowchart……... 5

3.3. Design and Test Steps……..... 7

3.4. Algorithm and Pseudo Code…….. 7-8

3.4.1. Algorithm…… 7

3.4.2. Pseudo Code……... 8

4. RESULTS……10

5. CONCLUSION……11

6. REFERENCES……12

7. APPENDICES…… 13

1. INTRODUCTION

1.1. Problem Definition

Safety place a major role in today's world and it is necessary that good safety systems are to be implemented in places of education and work. This work modifies the existing safety model installed in industries and this system also be used in homes and offices. The main objective of the work is designing microcontroller based toxic gas monitoring system. The hazardous gases like LPG, methane and carbon monoxide should be sensed and displayed each and every second on portable device.

1.2. Project Overview

In this project we use blynk, ESP8266 based NodeMCU. When the gas concentration will increase, a blynk notification will be sent to your smartphone. This is how this gas leakage detection system works. Some gases are highly inflammable and need to be careful while using it. There are situations where accidents have occurred and huge damage has done. In this project we built a Hazardous gas monitoring system using MQ2 Sensor and give alert on blynk app.

We can easily monitor the gas level or leakage from our smartphone (Portable Device).

So, this IOT system is design using NodeMCU and MQ2 sensor for purpose of detection of toxic gas leakage, which in turn neglects the dangers that have adverse effects on human lives.

1.3. Hardware Specification

1.3.1. NodeMCU

NodeMCU (Node MicroController Unit) is a low-cost open source IOT platform. It initially included firmware which runs on ESP8266 Wi-Fi System-on-a-chip (SOC). The ESP8266 can be programmed using the Arduino IDE programming environment.

1.3.2. MQ2 Sensor

MQ2 gas sensor is an electronic sensor used for sensing the concentration of gases in the air such as LPG, propane, methane, hydrogen, alcohol, smoke and carbon monoxide. MQ2 gas sensor is also known as chemiresistor. It contains a sensing material whose resistance changes when it comes in contact with the gas. This change in the value of resistance is used for the detection of gas. MQ2 is a metal oxide semiconductor type gas sensor. Concentrations of gas in the gas is measured using a voltage divider network present in the sensor. This sensor works on 5V DC voltage. It can detect gases in the concentration of range 200 to 10000ppm.

1.3.3. Buzzer

A buzzer or beeper is an audio signalling device, which may be mechanical, electromechanical. Typical uses of buzzers and beepers include alarm device.

1.3.4. LED Green/Red

In this project we use LED light for visual alert.

1.3.5. Resistor 220 ohm

Resistors act to reduce current flow and at the same time, act to lower voltage levels within circuits. In

electronic circuits, resistor is used to limit current flow, to adjust signals levels, bias active elements and terminate transmission lines among other uses.

1.3.6. Breadboard

A breadboard is used to build and test circuits quickly before finalizing any circuit design. The breadboard has many holes into which circuit components like ICs and resistors can be inserted.

The bread board has strips of metal which run underneath the board and connect the holes on the top of the board. The top and bottom rows of holes are connected horizontally while the remaining holes are connected vertically.

1.3.7. Jumper Wires

Jumper wires are simply wires that have connector pins at each end, allowing them to be used to connect two points to each other. Jumper wires are typically used with breadboards and other prototyping tools in order to make it easy to change a circuit as needed.

1.4. Software Specification

1.4.1. Arduino IDE

Arduino IDE where IDE stands for Integrated Development Environment - An official software introduced by Arduino.cc, that is mainly used for writing, compiling and uploading the code in the Arduino Device. Almost all Arduino modules are compatible with this software that is an open source and is readily available to install and start compiling the code.

The main code, also known as a sketch, created on the IDE platform will ultimately generate a Hex File which is then transferred and uploaded in the controller on the board.

The IDE environment mainly contains two basic parts: Editor and Compiler where former is used for writing the required code and later is used for compiling and uploading the code into the given Arduino Module. This environment supports both C and C++ languages.

1.4.2. Blynk Application

Blynk was designed for the Internet of Things. It can control hardware remotely, it can display sensor data, it can store data, visualize it and do many other cool things.

There are three major components in the platform:

- Blynk App - allows to create amazing interfaces for projects using various widgets we provide.
- Blynk Server - responsible for all the communications between the smartphone and hardware. You can use our Blynk Cloud or run your private Blynk server locally. It’s open-source, could easily handle thousands of devices.
- Blynk Libraries - for all the popular hardware platforms - enable communication with the server and process all the incoming and outcoming commands.

2. Literature Survey

2.1. Existing System

The existing system used Arduino microcontroller and additional Wi-Fi module for transmitting and receiving information.

Mainly, for audio detection buzzer is used in industries for alarming (If gas leakage is detected) and LCDs used for displaying gas concentration. Colourful LEDs like green and red for visual detection.

2.2. Proposed System

In this project we proposed a system that gives alert notification on our portable device (mobile phone) when sensor detects hazardous gas. In the situation of this pandemic most of the industries shut down due to lockdown and if gas leakages the existing system like Buzzer alerting and LED detection won't work in this case. Mobile phone is a handy device which gives alert anywhere over internet connection.

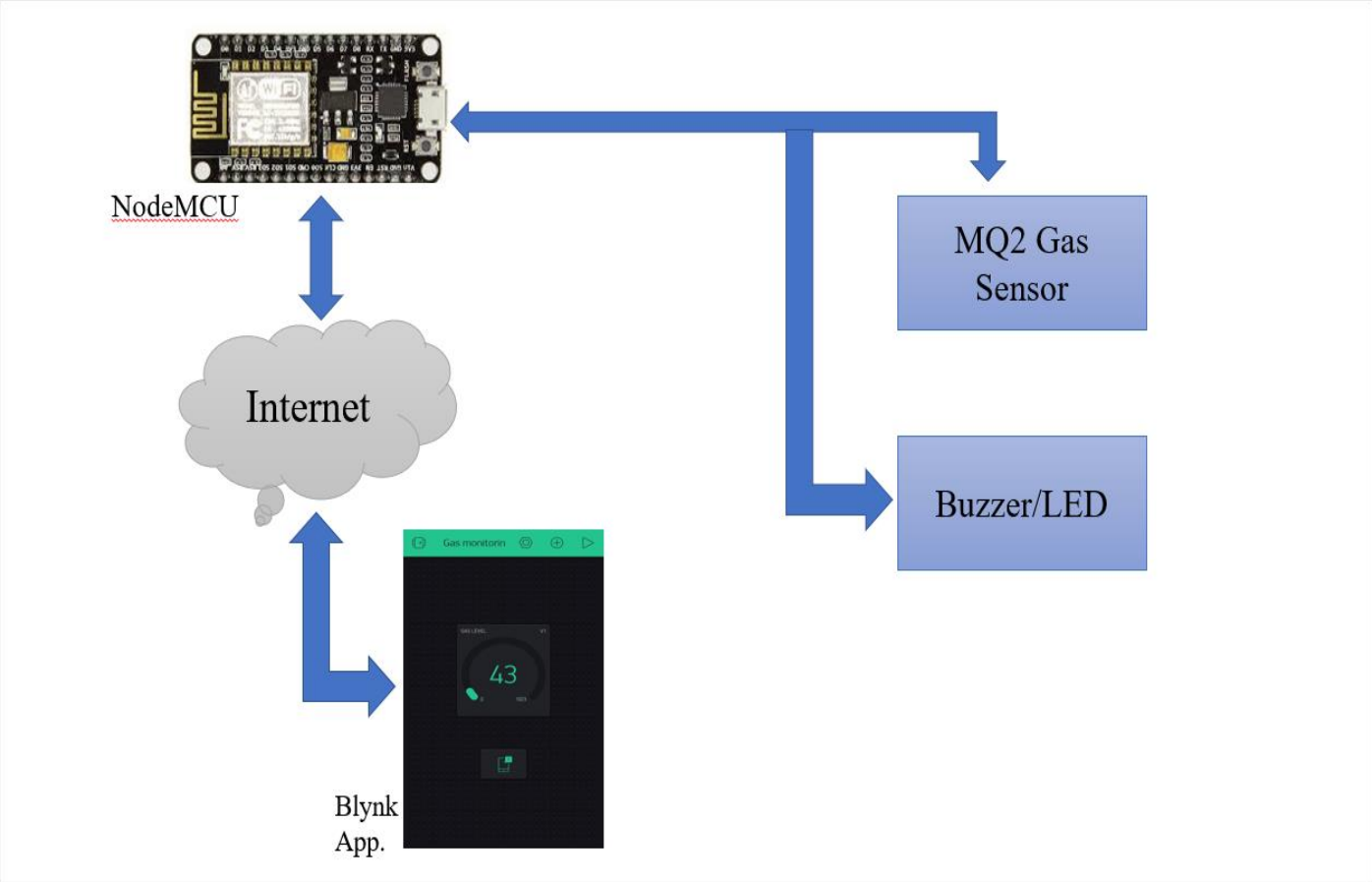

Fig. 1: Implementation of Hazardous Gas Monitoring System

Figure 1 shows the implementation of System. MQ2 gas sensor sends the data to NodeMCU Microcontroller then, according to coding NodeMCU sends data to buzzer, LEDs to work accordingly. Also, sends data to Blynk Application over internet.

2.3. Feasibility Study

In our project IOT based hazardous gas monitoring system, we introduce a system that gives alert notification on our mobile phone when sensor detects hazardous gas. In this project we use blynk which shows the gas concentration and also send blynk notification to your smartphone. This IOT system is design using NodeMCU and MQ2 sensor for purpose of detection of toxic gas leakage,

In the initial step, the gas leakage is detected by the gas sensor. This detects gas leakage and gives the signal to the microcontroller. After that in second step the microcontroller receives the signal, which sends by gas sensor. It sends activation signal to other external devices.

3. SYSTEM ANALYSIS & DESIGN

3.1. Requirement Specification

3.1.1. Hardware

- NodeMCU
- MQ2 Sensor
- Buzzer
- LED Green/Red
- Resistor 220 ohm
- Breadboard
- Jumper Wires

3.1.2. Software

- Arduino IDE
- Blynk Application

3.1.3. Process Specification

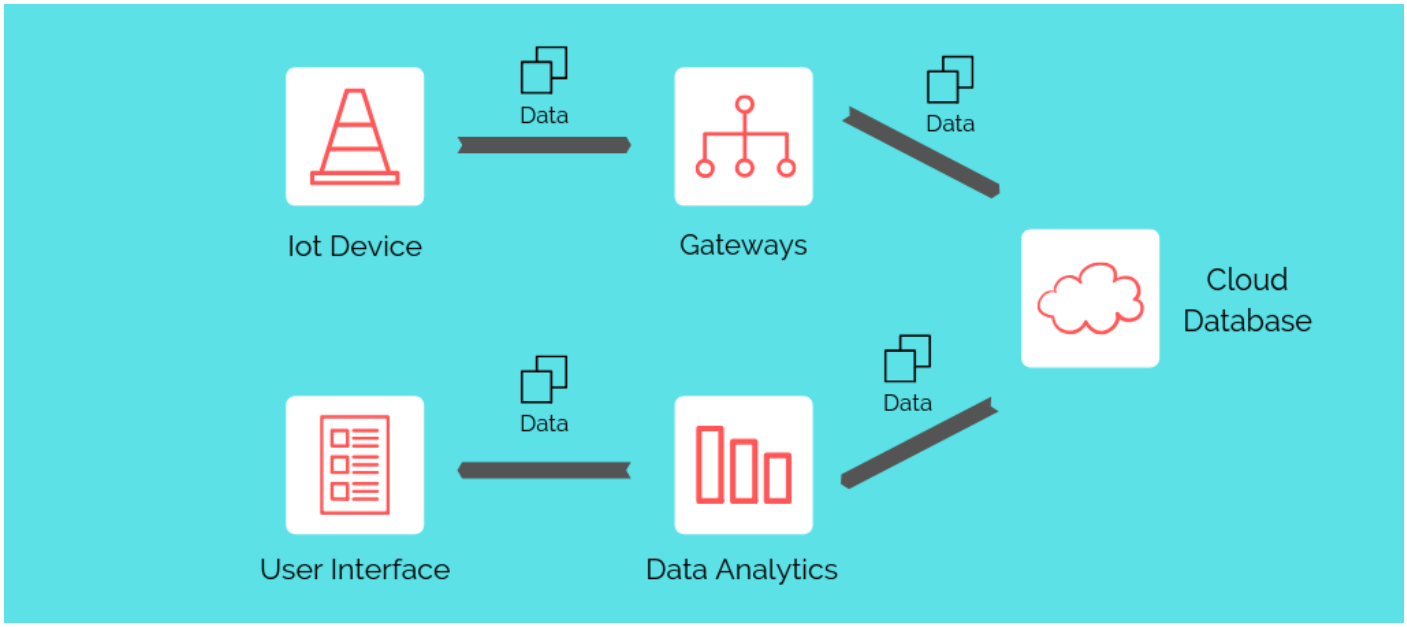

Fig. 2: Basic Work-Flow of IoT

The Fig.1 shows the basic process of IoT or we can say that basic IoT work flow:

Step 1: firstly, IoT devices like sensors senses and give data to another IoT device like microcontrollers and then microcontroller give data to Wi-Fi module.

Step 2: Then, data travels over internet and store in cloud database.

Step 3: Then, Cloud database sends data to User Interface as per Backend coding.

3.2. Flowchart

Figure 3 shows flow chart of system

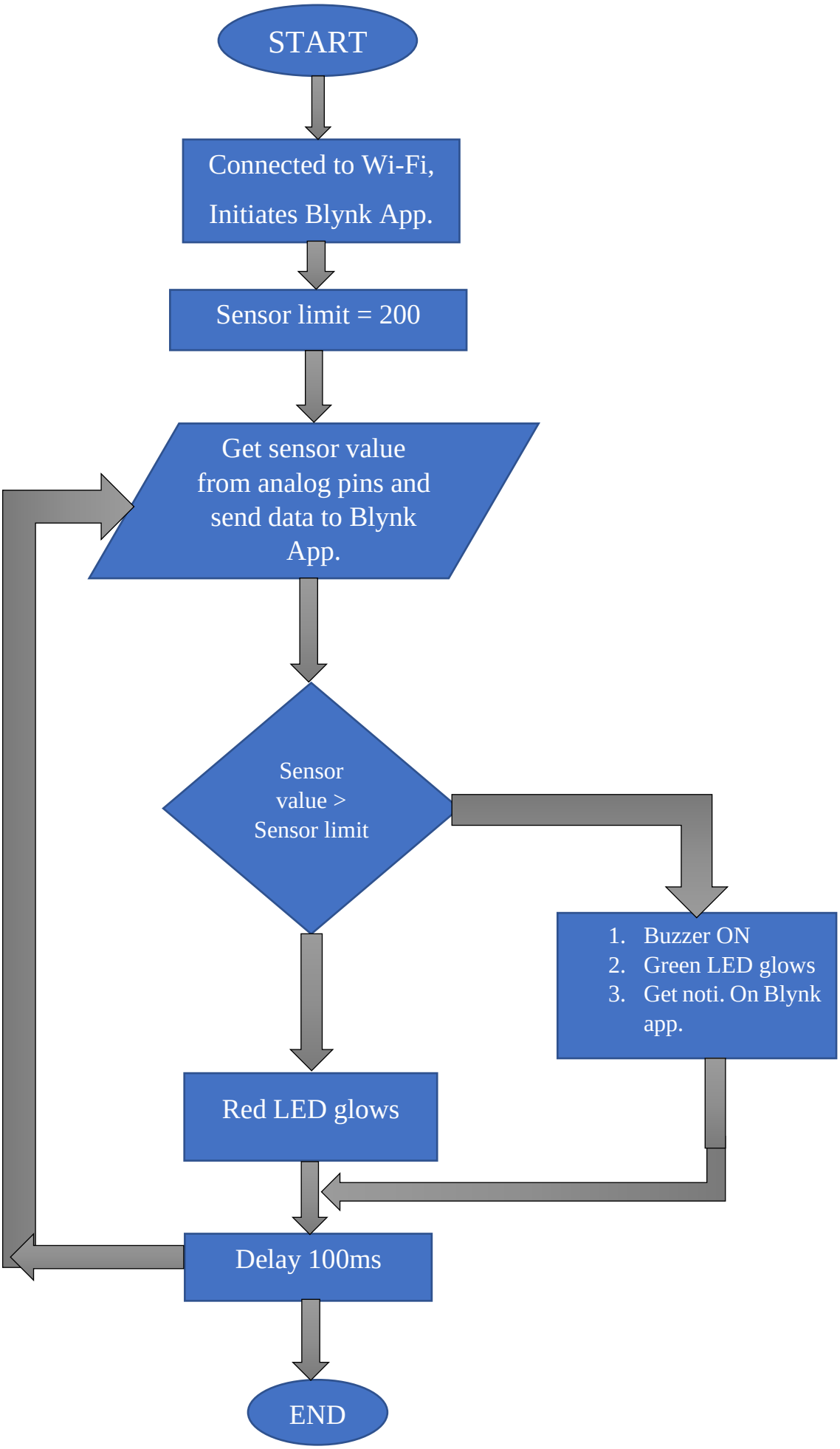

Fig. 3: Flowchart

3.3. Design and Test Steps

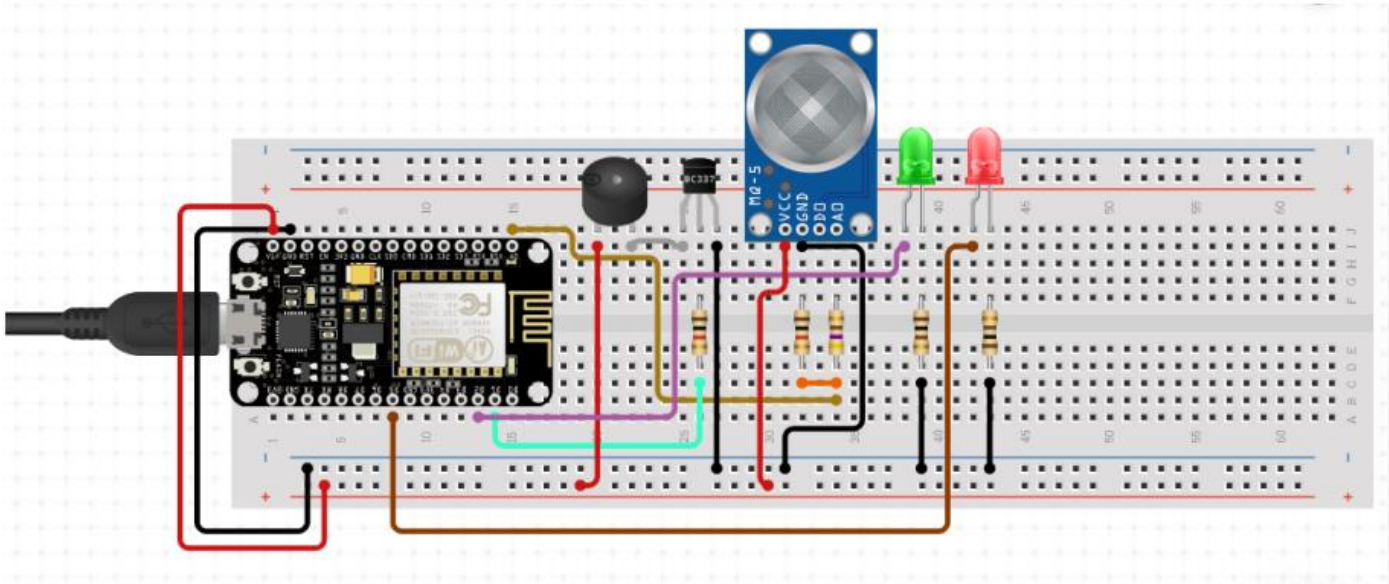

Fig. 4: Circuit Design of Hazardous gas monitoring system

Connections:

1. NodeMCU Vin to Bus POS.
2. NodeMCU GND to Bus GND.
3. VCC of MQ-5 to Bus POS.
4. GND of MQ-5 to Bus GND.
5. A0 of NodeMCU to A0 of MQ-5 Sensor.
6. Buzzer POS to Bus POS.
7. Buzzer negative to TSBC 337C Transistor.
8. NodeMCU D1 to Transistor register.
9. TSBC 337E Transistor to GND to Bus GND.
10. Green LED Vin to NodeMCU D5.
11. Red LED Vin to NodeMCU D6.
12. Green LED GND to Bus GND.
13. Red LED GND to Bus GND.

Testing Steps:

Step-1 when the concentration of gas leakage crosses the limit our sensor sense.

Step-2 After sensing the gas leakage the sensor sends data to microcontroller.

Step-3 Then microcontroller sends activation signal or data to other external devices

Step-4 In lastly if gas leakage detects an alert notification pop-up on mobile phone.

3.4. Algorithm and Pseudo Code

3.4.1. Algorithm

Step 1: Start the process

Step 2: Connected to Wi-Fi

Step 3: Initiates Blynk Application.

Step 4: Sensor limit = 200

Step 4: Get gas level Value from Analog pin.

Step 5: Send Data to Blynk Application.

Step 6: Condition checking

If sensor value > sensor limit

Buzzer and green led turned ON, and also notified in the app.

Delay 100 ms

Buzzer OFF

Else

Red light turned ON

Green light Turned OFF

Buzzer OFF

Step 7: Delay 100 ms

Step 8: Repeat Step 4, 5, 6 and 7 until process ends

Step 9: End

3.4.2. Pseudo Code

```
 {
int sensor_value = analogRead(sensor);    //here NodeMCU reads the value of sensor
 Serial.print("Gas Level: "); //Prints data to the serial port
 Serial.println(sensor_value);
 Blynk.virtualWrite(V1, sensor_value);


 if (sensor_value > sensor_limit) //Checks if it has reached the threshold value
  {
   digitalWrite(led_green, HIGH); //led_green is at HIGH state as there is leakage
   digitalWrite(led_red, LOW); //led_red is at LOW state as there is leakage
   digitalWrite(buzzer, HIGH); //buzzer is at high state as there is leakage
   delay(100);
   digitalWrite(buzzer, LOW); //after 100ms buzzer stops
   Blynk.notify("Alert: Gas Leakage Detected");
```

```
  }
 else
  {
   digitalWrite(buzzer, LOW); //buzzer is at low state as there is no leakage
   digitalWrite(led_green, LOW); //led_green is at LOW state as there is no leakage
   digitalWrite(led_red, HIGH); //led_red is at HIGH state as there is no leakage
  }
  delay(100);
  Blynk.run();
}
```

Above Pseudo code is the main part of coding i.e. loop.

4. Result

The prototype of leakage system has been tested by sensing a small amount of smoke near to the sensor. MQ-2 gas sensor detects Methane, LPG, Smoke and Butane gas and sends a signal to the microcontroller After that microcontroller send an active signal to other externally connected devices.

As a result, if gas leakage detected then Buzzer and Red led turn on and also pop-up notification arrive on portable device.

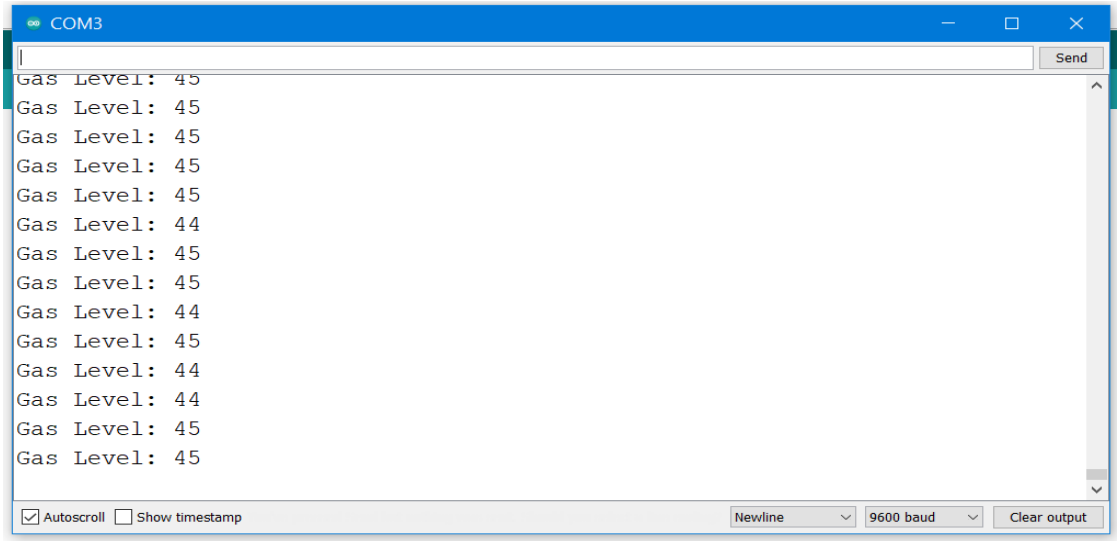

Fig. 5: Shown Gas level on Serial monitor

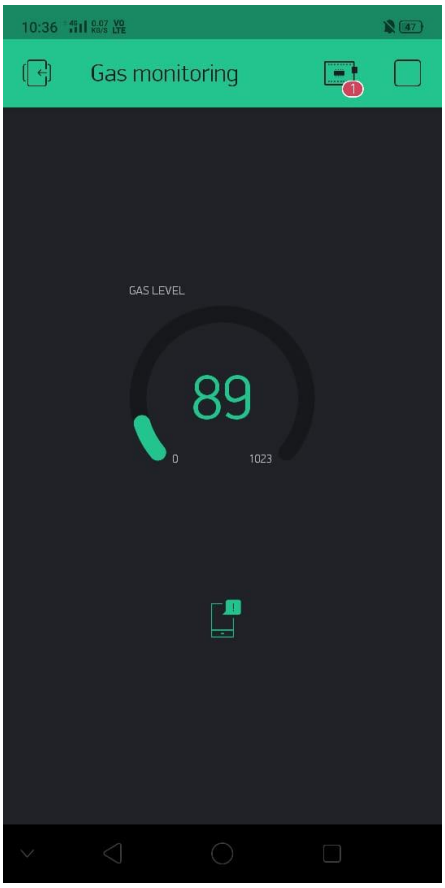

Fig. 6: Gas level on Blynk Application

5. Conclusions

In this project, the idea proposed would be another step towards automation. This system would considerably reduce human intervention in the monitoring of the toxic gases and hence will save much time. It will also ensure human safety by preventing accidents due to gas leakage through portable device when there is gas leakage. This system can be scaled for use in industries where heavy pipelines and cylinders are used. The proposed system when successfully implemented can also be used in mines where gas sensors will detect leakage of toxic gases and can send a signal for the emergency evacuation of workers.

In this system we have describe a new approach for gas leakage detection system at a low concentration. The leakage is detected with the help of MQ-2 gas sensors. Sensor sends a signal to microcontroller. In the next step microcontroller sends an active signal to other externally connected devices. A quick response rate is provided by this system. With the help of this system the critical situations can be solved quickly over the manual methods which require large amount of time.

6. References

- ESP8266 Arduino Core Documentation Release 2.4.0 By Ivan Grokhotkov
- Internet of Things (IOT): Principles, Paradigms & Applications of IOT by Dr Kamlesh Lakhwani, Dr Hemant Kumar Gianey
- Introduction to Gas Detection System on Draeger website., 2016, [online] Available: https://www.draeger.com/Library/Content/introduction_gds_fl_9046421_en_1.pdf.
- How Gas Sensors Work on Engineersgarage, 2016, [online] Available: http://www.engineersgarage.com!insight/how-gas-sensor-works.
- A nice introductory video from Great Scott Labs about the ESP8266.
- Seeed Studio article on Getting Started with ESP8266.
- Website: http://www.data-flair.training.com IoT-tutorials
- Website: http://www.tutorialspoint.com tutorials
- Website: https://www.arduino.cc
- Website: https://github.com/esp8266/Arduino
- Website: https://blynk.io

7. Appendices

Microcontroller: The small, integrated circuit typically includes a processor, memory, and input and output peripherals -- all of which are contained on a single chip.

Wi-Fi Module: Wi-Fi module makes putting our sensors on the net actually feasible.

There seems to be three ways of using this module, in order of increasing complexity:

1. Sending it AT commands from a computer via an USB to serial adapter. This is mostly useful for testing and setup.
2. Interfacing with an Arduino or any other microcontroller and using this board as a peripheral.
3. Programming the module directly and use its GPIO pins to talk to your sensors, eliminating the need for a second controller.

Jumper wires: Jumper wires typically come in three versions: male-to-male, male-to-female and female-to-female. The difference between each is in the end point of the wire. Male ends have a pin protruding and can plug into things, while female ends do not and are used to plug things into. In our system we use male-to-female wires.

User Interface (UI): The user interface consists of the features by which a user interacts with a computer system. This includes screens, pages, buttons, icons, forms, etc. The most obvious examples of user interfaces are software's and applications on computers and smartphones. A user interface doesn't necessarily require a screen, however. For example, our system has a user interface that consists of various buttons, and devices such as concentration of gas can be monitored with portable device.

Circuito.io simulator: Circuito.io is an automatic generator of circuit schematics and code. We plan our circuit by picking the high-level electronic blocks, and circuito.io does all the rest. It calculates all the electrical requirements for each component and produces and detailed schematic diagram for you to follow to wire your building blocks together.

Functions used in Coding:

1. setup(): The setup() function is called when a sketch starts. Use it to initialize variables, pin modes, start using libraries, etc. The setup() function will only run once, after each powerup or reset of the Arduino board.

2. pinMode(): The pinMode() function is used to configure a specific pin to behave either as an **input** or an **output**.

3. digitalWrite(): Write a **HIGH** or a **LOW** value to a digital pin.

4. Serial.begin(): Sets the data rate in bits per second (baud) for serial data transmission. For communicating with the computer, use one of these rates: 300, 600, 1200, 2400, 4800, 9600, 14400, 19200, 28800, 38400, 57600, or 115200.

5. analogRead(): The analogRead is a command mainly used to **program the analog pins on the board**. If you are using analogRead functions, it indicates you are making the pins as input i.e. you can connect the NodeMCU analog pins with any sensor and read its value by making the analog pins as input.

6. Serial.print(): Prints data to the serial port as human-readable ASCII text. This command can take many forms. Numbers are printed using an ASCII character for each digit. Floats are similarly printed as ASCII digits, defaulting to two decimal places. Bytes are sent as a single character