Name:

Brac University
Semester: Spring 2026
Course Code: CSE250
Circuits and Electronics
Section: 01
Faculty: SDS

Set **A**

Assessment: *Main Template*
Duration: 30 minutes
Date: April 11, 2026
Full Marks: 10

✓ No washroom breaks. Phones must be turned off. Using/carrying any notes during the exam is not allowed.
✓ All **4 question(s)** are compulsory. Marks allotted for each question are mentioned beside each question.
✓ Write your answers inside the indicated boxes (where applicable). If you run out of room, continue on the back page.
✓ Symbols have their usual meanings.

DO NOT WRITE ANYTHING ELSE INSIDE THIS BORDER

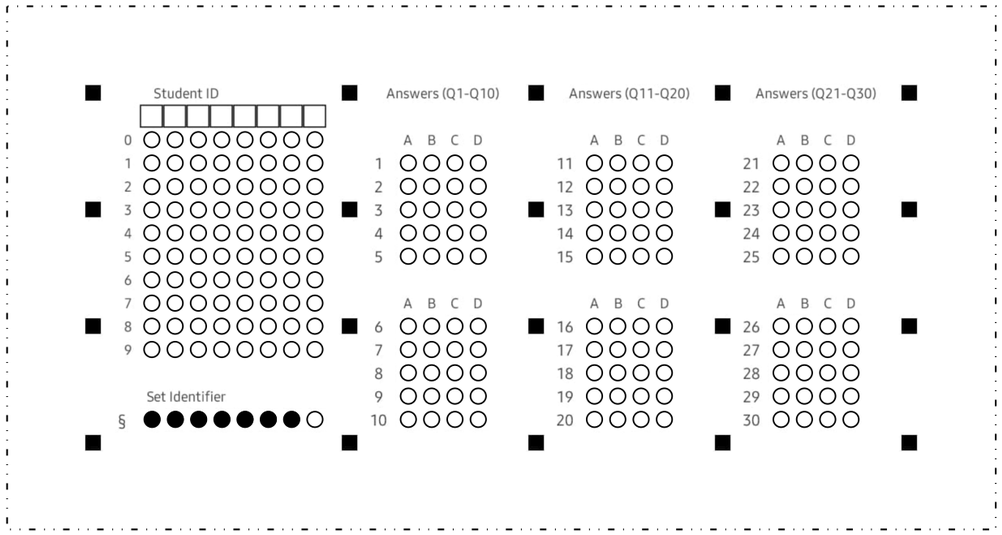

DO NOT WRITE ANYTHING ELSE INSIDE THIS BORDER

♢ Question 1 of 4 *[CO1] [1 mark]*

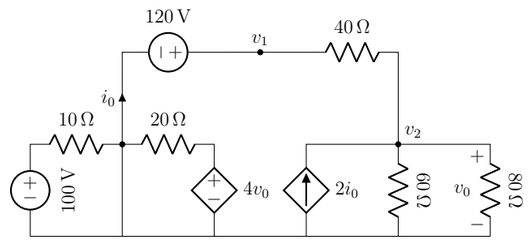

How many nodes are in this circuit?

(a) 5 **(b)** 3 **(c)** 4 **(d)** 7 **(e)** 6

♢ Question 2 of 4 *[CO3] [2 marks]*

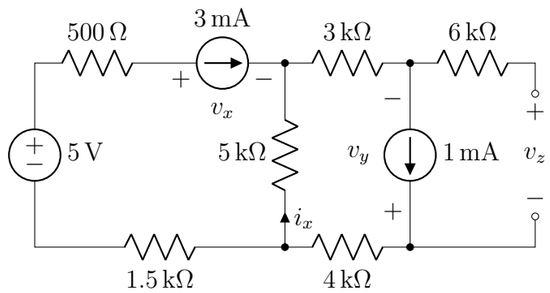

(a) c
(b) b
(c) a

♢ Question 3 of 4 *[CO3] [5 marks]*

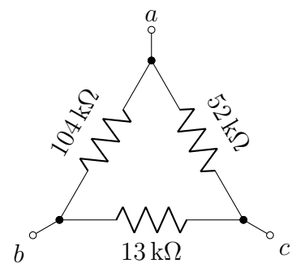

Which of the following statements is true?

(a) $R_{ab} = 40\,k\Omega, R_{bc} = 12\,k\Omega, R_{ca} = 36\,k\Omega$

(b) $R_{ab} = R_{bc} = R_{ca} = 9.455\,k\Omega$

(c) $R_{ab} = 40\,\Omega, R_{bc} = 12\,\Omega, R_{ca} = 36\,\Omega$

(d) $R_{ab} = 104\,k\Omega, R_{bc} = 13\,k\Omega, R_{ca} = 52\,k\Omega$

(e) None of the above

Which of the following circuits is/are impossible (violates Kirchhoff's laws)?

◇ **Question 4 of 4** ***[CO1] [2 marks]***

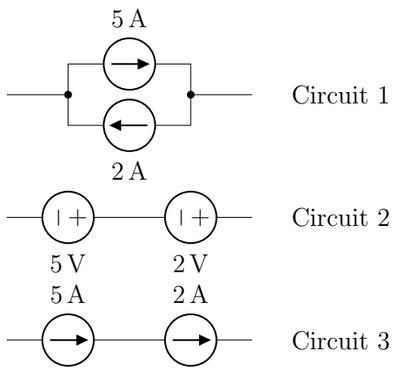

(a) Circuit 2 **(b)** Circuit 1 & 3 **(c)** Circuit 1 **(d)** Circuit 3 **(e)** None of the aboveDo you have any suggestion that may improve this course?

Your Suggestions

..... ↓ *Your answers/roughs start here* ↓ .....

Name:

Brac University
Semester: Spring 2026
Course Code: CSE250
Circuits and Electronics
Section: 01
Faculty: SDS

Set **B**

Assessment: *Main Template*
Duration: 30 minutes
Date: April 11, 2026
Full Marks: 10

✓ No washroom breaks. Phones must be turned off. Using/carrying any notes during the exam is not allowed.
✓ All **4 question(s)** are compulsory. Marks allotted for each question are mentioned beside each question.
✓ Write your answers inside the indicated boxes (where applicable). If you run out of room, continue on the back page.
✓ Symbols have their usual meanings.

DO NOT WRITE ANYTHING ELSE INSIDE THIS BORDER

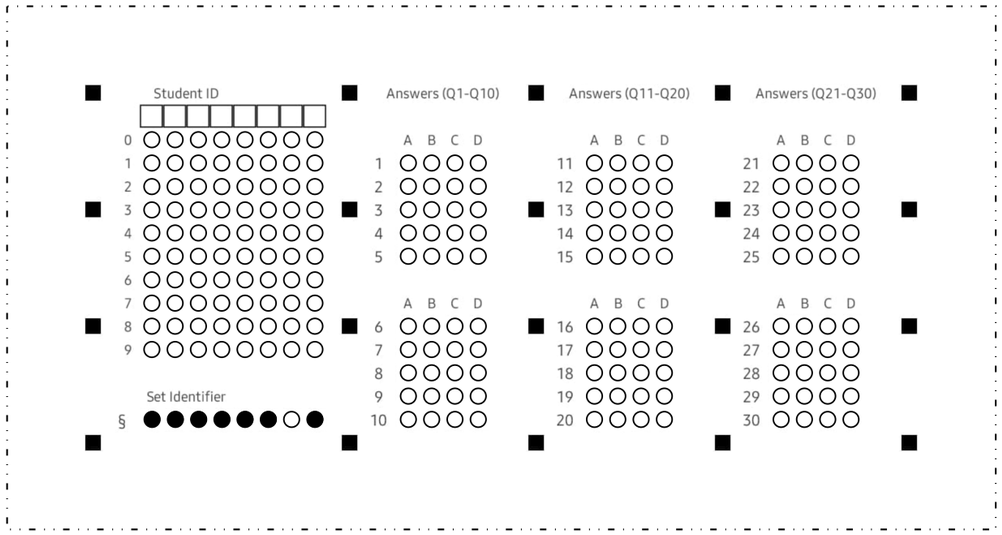

DO NOT WRITE ANYTHING ELSE INSIDE THIS BORDER

♢ Question 1 of 4 *[CO3] [5 marks]*

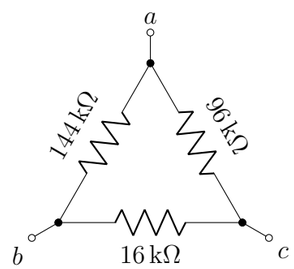

Which of the following statements is true?

(a) $R_{ab} = R_{bc} = R_{ca} = 12.522\,k\Omega$
(b) $R_{ab} = 63\,k\Omega, R_{bc} = 15\,k\Omega, R_{ca} = 60\,k\Omega$
(c) $R_{ab} = 63\,\Omega, R_{bc} = 15\,\Omega, R_{ca} = 60\,\Omega$
(d) $R_{ab} = 144\,k\Omega, R_{bc} = 16\,k\Omega, R_{ca} = 96\,k\Omega$
(e) None of the above

♢ Question 2 of 4 *[CO3] [2 marks]*

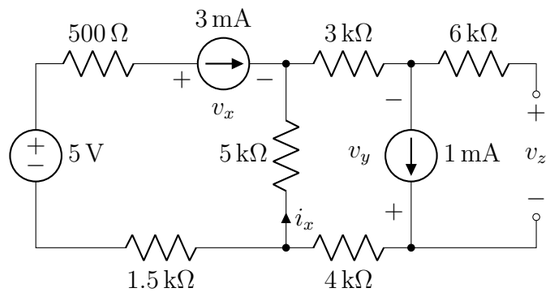

(a) c
(b) b
(c) a

♢ Question 3 of 4 *[CO1] [1 mark]*

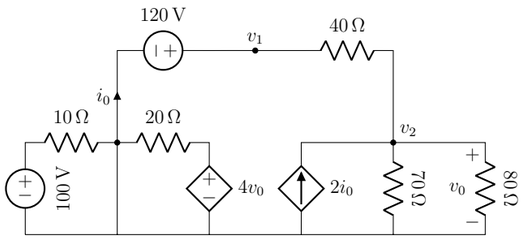

How many nodes are in this circuit?

(a) 6 **(b)** 4 **(c)** 3 **(d)** 5 **(e)** 7

♢ Question 4 of 4 *[CO1] [2 marks]*

Which of the following circuits is/are impossible (violates Kirchhoff's laws)?

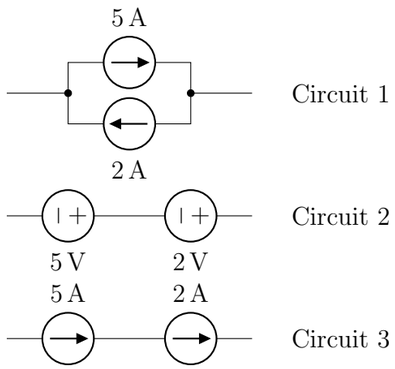

(a) Circuit 3 **(b)** Circuit 1 **(c)** Circuit 1 & 3 **(d)** Circuit 2 **(e)** None of the aboveDo you have any suggestion that may improve this course?

Your Suggestions

..... ↓ *Your answers/roughs start here* ↓ .....

Name:

Brac University
Semester: Spring 2026
Course Code: CSE250
Circuits and Electronics
Section: 01
Faculty: SDS

Set **C**

Assessment: *Main Template*
Duration: 30 minutes
Date: April 11, 2026
Full Marks: 10

- ✓ No washroom breaks. Phones must be turned off. Using/carrying any notes during the exam is not allowed.
- ✓ All **4 question(s)** are compulsory. Marks allotted for each question are mentioned beside each question.
- ✓ Write your answers inside the indicated boxes (where applicable). If you run out of room, continue on the back page.
- ✓ Symbols have their usual meanings.

DO NOT WRITE ANYTHING ELSE INSIDE THIS BORDER

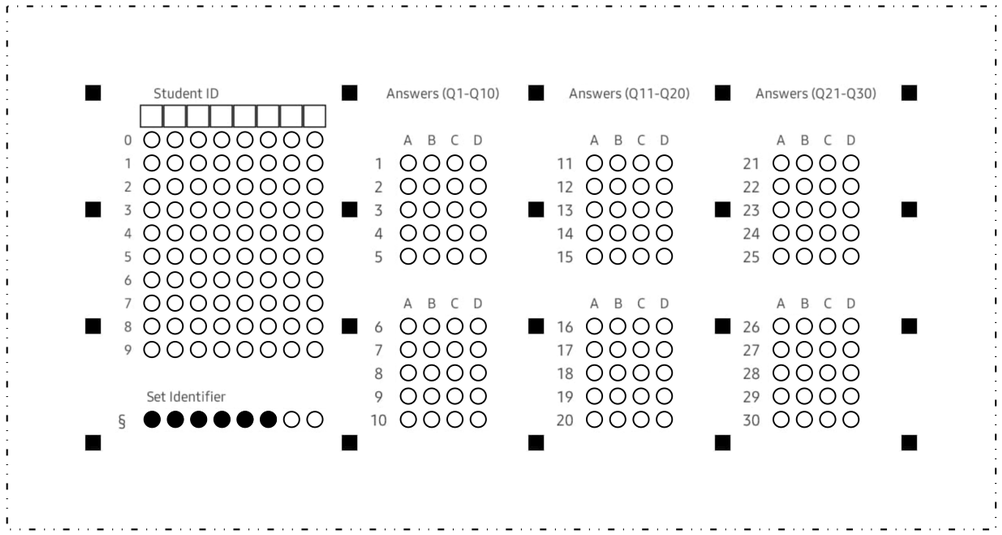

DO NOT WRITE ANYTHING ELSE INSIDE THIS BORDER

♢ Question 1 of 4 *[CO3] [2 marks]*

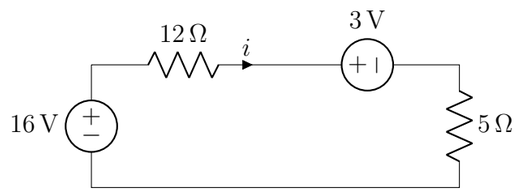

What's the relation between v_1, v_2 and i?

(a) $-16 + 12i - 3 + 5i = 0$
(b) $-16 - 12i - 3 + 5i = 0$
(c) $-16 - 12i + 3 + 5i = 0$
(d) $-16 + 12i + 3 + 5i = 0$
(e) None of the above

♢ Question 2 of 4 *[CO3] [5 marks]*

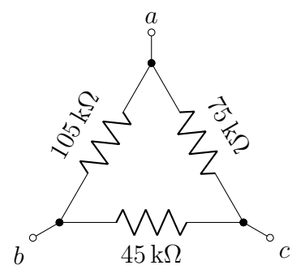

Which of the following statements is true?

(a) $R_{ab} = R_{bc} = R_{ca} = 22.183\,k\Omega$
(b) $R_{ab} = 56\,\Omega, R_{bc} = 36\,\Omega, R_{ca} = 50\,\Omega$
(c) $R_{ab} = 105\,k\Omega, R_{bc} = 45\,k\Omega, R_{ca} = 75\,k\Omega$
(d) $R_{ab} = 56\,k\Omega, R_{bc} = 36\,k\Omega, R_{ca} = 50\,k\Omega$
(e) None of the above

♢ Question 3 of 4 *[CO1] [1 mark]*

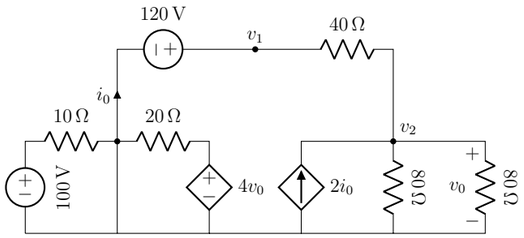

How many nodes are in this circuit?

(a) 7 **(b)** 5 **(c)** 3 **(d)** 4 **(e)** 6

♢ Question 4 of 4 *[CO1] [2 marks]*

Which of the following circuits is/are impossible (violates Kirchhoff's laws)?

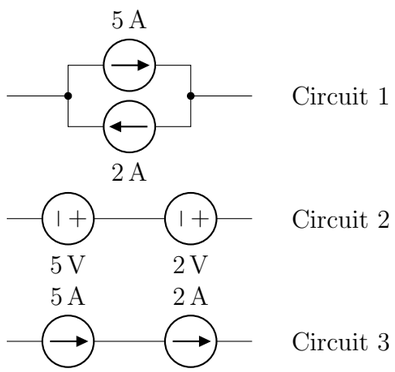

(a) Circuit 1 **(b)** Circuit 1 & 3 **(c)** Circuit 2 **(d)** Circuit 3 **(e)** None of the aboveDo you have any suggestion that may improve this course?

Your Suggestions

..... ↓ *Your answers/roughs start here* ↓ .....

Name:

Brac University
Semester: Spring 2026
Course Code: CSE250
Circuits and Electronics
Section: 01
Faculty: SDS

Set **D**

Assessment: *Main Template*
Duration: 30 minutes
Date: April 11, 2026
Full Marks: 10

- ✓ No washroom breaks. Phones must be turned off. Using/carrying any notes during the exam is not allowed.
- ✓ All **4 question(s)** are compulsory. Marks allotted for each question are mentioned beside each question.
- ✓ Write your answers inside the indicated boxes (where applicable). If you run out of room, continue on the back page.
- ✓ Symbols have their usual meanings.

DO NOT WRITE ANYTHING ELSE INSIDE THIS BORDER

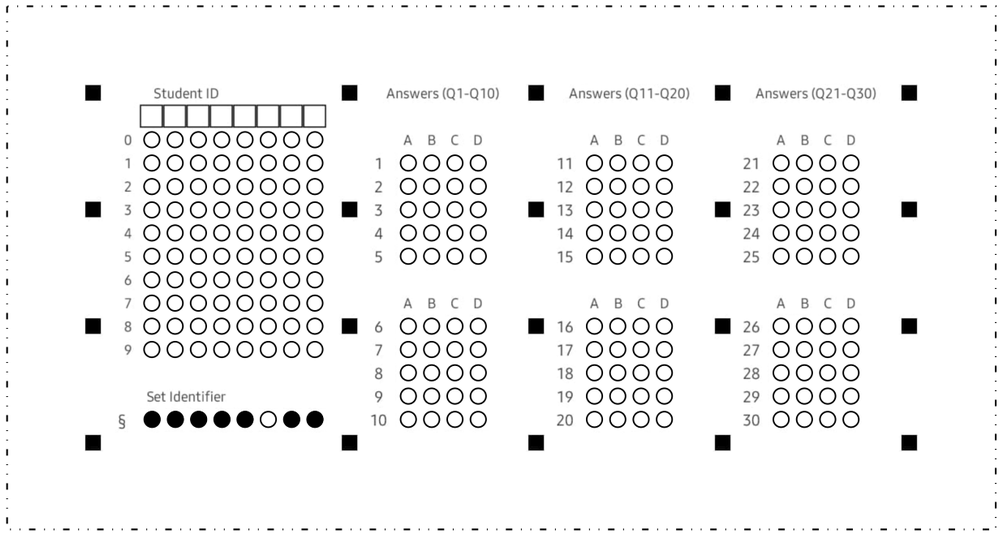

DO NOT WRITE ANYTHING ELSE INSIDE THIS BORDER

♢ Question 1 of 4 *[CO1] [2 marks]*

Which of the following circuits is/are impossible (violates Kirchhoff's laws)?

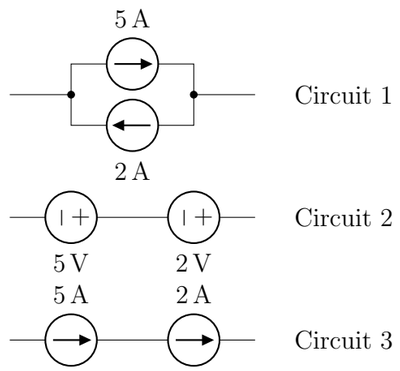

(a) Circuit 1 & 3 **(b)** Circuit 2 **(c)** Circuit 1
(d) Circuit 3 **(e)** None of the above

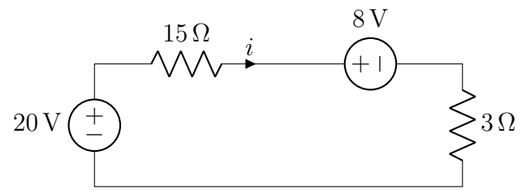

♢ Question 2 of 4 *[CO3] [2 marks]*

What's the relation between v_1, v_2 and i?

(a) $-20 + 15i + 8 + 3i = 0$
(b) $-20 - 15i - 8 + 3i = 0$
(c) $-20 + 15i - 8 + 3i = 0$
(d) $-20 - 15i + 8 + 3i = 0$
(e) None of the above

♢ Question 3 of 4 *[CO1] [1 mark]*

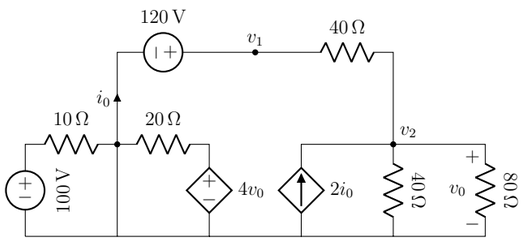

How many nodes are in this circuit?

(a) 6 **(b)** 5 **(c)** 3 **(d)** 7 **(e)** 4

♢ Question 4 of 4 *[CO3] [5 marks]*

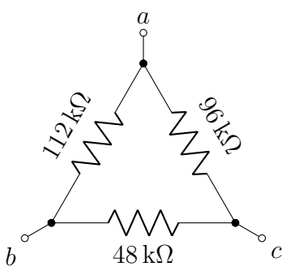

Which of the following statements is true?

(a) $R_{ab} = R_{bc} = R_{ca} = 24.889\,k\Omega$
(b) $R_{ab} = 63\,k\Omega, R_{bc} = 39\,k\Omega, R_{ca} = 60\,k\Omega$
(c) $R_{ab} = 63\,\Omega, R_{bc} = 39\,\Omega, R_{ca} = 60\,\Omega$
(d) $R_{ab} = 112\,k\Omega, R_{bc} = 48\,k\Omega, R_{ca} = 96\,k\Omega$
(e) None of the above

Do you have any suggestion that may improve this course?

Your Suggestions

..... ↓ *Your answers/roughs start here* ↓ .....