Name:

Brac University
Semester: Spring 2026
Course Code: CSE250
Circuits and Electronics
Section: 01
Faculty: SDS

Set **A**

Assessment: *Quiz 1*
Duration: 30 minutes
Date: April 11, 2026
Full Marks: 10

✓ No washroom breaks. Phones must be turned off. Using/carrying any notes during the exam is not allowed.
✓ All **4 question(s)** are compulsory. Marks allotted for each question are mentioned beside each question.
✓ Write your answers inside the indicated boxes (where applicable). If you run out of room, continue on the back page.
✓ Symbols have their usual meanings.

DO NOT WRITE ANYTHING ELSE INSIDE THIS BORDER

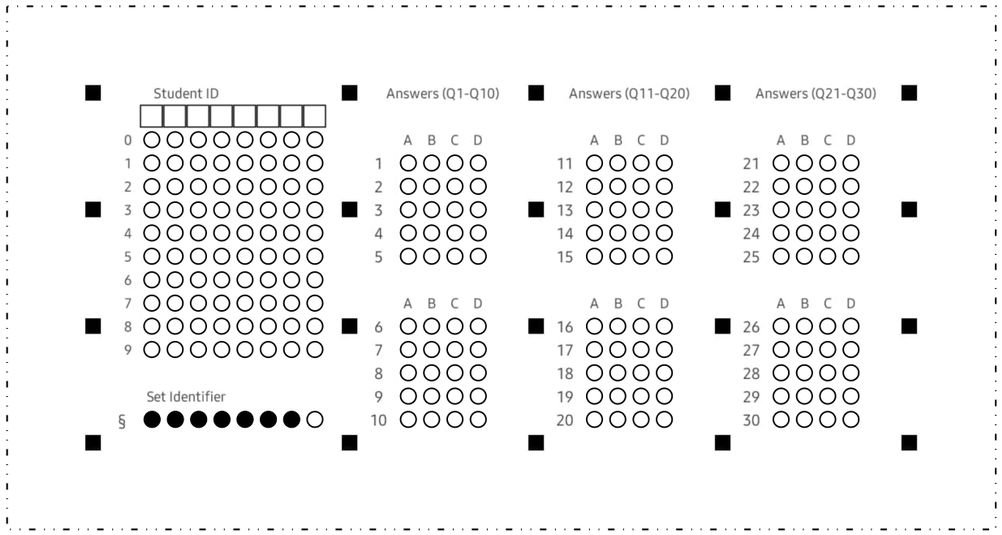

DO NOT WRITE ANYTHING ELSE INSIDE THIS BORDER

◇ **Question 1 of 4** ***[CO3] [2 marks]***

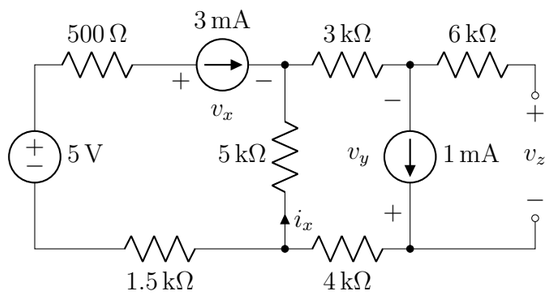

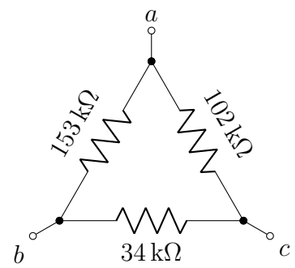

(a) c
(b) a
(c) b

◇ **Question 2 of 4** ***[CO3] [5 marks]***

Which of the following statements is true?

(a) $R_{ab} = 72\,k\Omega, R_{bc} = 30\,k\Omega, R_{ca} = 66\,k\Omega$
(b) $R_{ab} = 153\,k\Omega, R_{bc} = 34\,k\Omega, R_{ca} = 102\,k\Omega$
(c) $R_{ab} = R_{bc} = R_{ca} = 21.857\,k\Omega$
(d) $R_{ab} = 72\,\Omega, R_{bc} = 30\,\Omega, R_{ca} = 66\,\Omega$
(e) None of the above

♢ Question 3 of 4 *[CO1] [1 mark]*

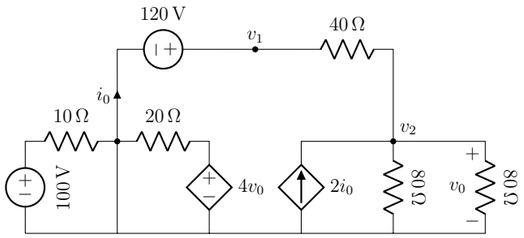

How many nodes are in this circuit?

(a) 6 **(b)** 4 **(c)** 7 **(d)** 5 **(e)** 3

♢ Question 4 of 4 *[CO1] [2 marks]*

Which of the following circuits is/are impossible (violates Kirchhoff's laws)?

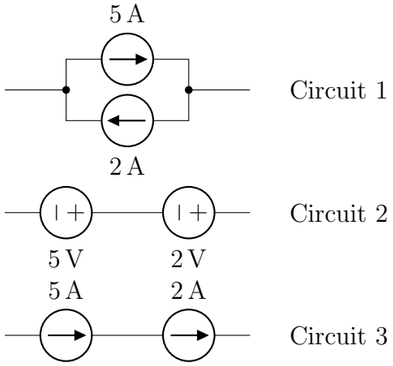

(a) Circuit 2 **(b)** Circuit 1 **(c)** Circuit 1 & 3 **(d)** Circuit 3 **(e)** None of the aboveDo you have any suggestion that may improve this course?

Your Suggestions

..... ↓ *Your answers/roughs start here* ↓ .....

Name:

Brac University
Semester: Spring 2026
Course Code: CSE250
Circuits and Electronics
Section: 01
Faculty: SDS

Set **B**

Assessment: *Quiz 1*
Duration: 30 minutes
Date: April 11, 2026
Full Marks: 10

- ✓ No washroom breaks. Phones must be turned off. Using/carrying any notes during the exam is not allowed.
- ✓ All **4 question(s)** are compulsory. Marks allotted for each question are mentioned beside each question.
- ✓ Write your answers inside the indicated boxes (where applicable). If you run out of room, continue on the back page.
- ✓ Symbols have their usual meanings.

DO NOT WRITE ANYTHING ELSE INSIDE THIS BORDER

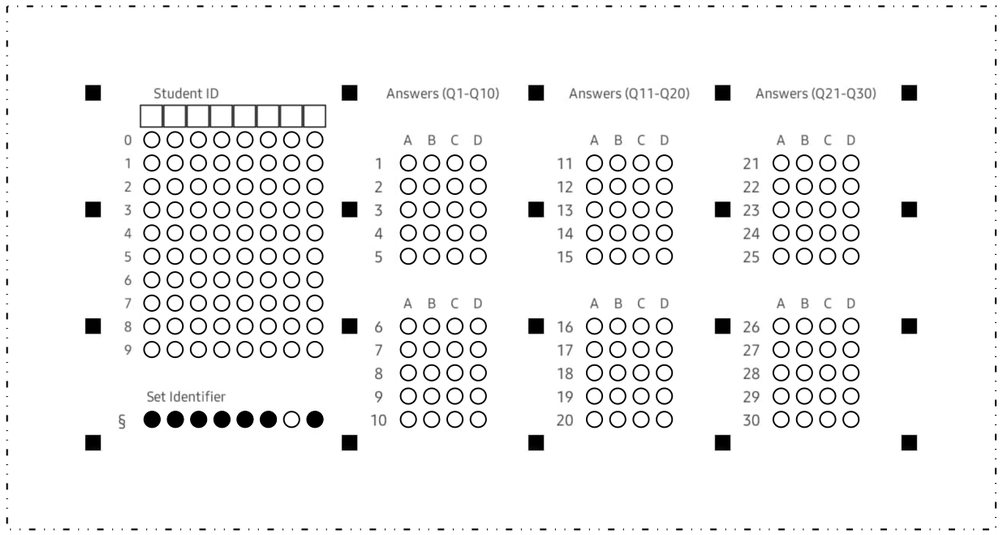

DO NOT WRITE ANYTHING ELSE INSIDE THIS BORDER

♢ Question 1 of 4 *[CO1] [1 mark]*

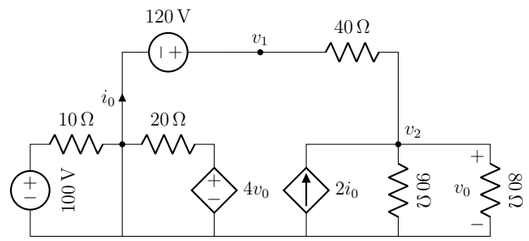

How many nodes are in this circuit?

(a) 3 **(b)** 5 **(c)** 6 **(d)** 7 **(e)** 4

♢ Question 2 of 4 *[CO3] [2 marks]*

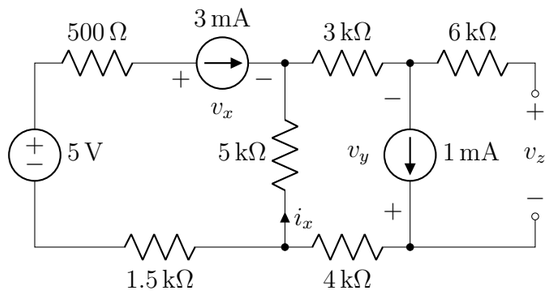

(a) a
(b) b
(c) c

♢ Question 3 of 4 *[CO3] [5 marks]*

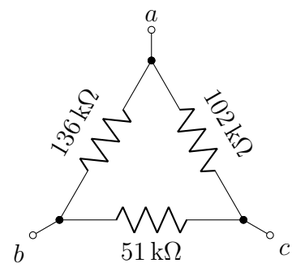

Which of the following statements is true?

(a) $R_{ab} = R_{bc} = R_{ca} = 27.2\,k\Omega$

(b) $R_{ab} = 136\,k\Omega, R_{bc} = 51\,k\Omega, R_{ca} = 102\,k\Omega$

(c) $R_{ab} = 72\,\Omega, R_{bc} = 42\,\Omega, R_{ca} = 66\,\Omega$

(d) $R_{ab} = 72\,k\Omega, R_{bc} = 42\,k\Omega, R_{ca} = 66\,k\Omega$

(e) None of the above

Which of the following circuits is/are impossible (violates Kirchhoff's laws)?

◇ **Question 4 of 4** ***[CO1] [2 marks]***

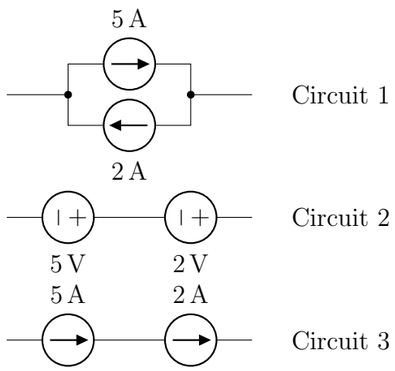

Circuit 1

Circuit 2

Circuit 3

(a) Circuit 2 **(b)** Circuit 3 **(c)** Circuit 1 **(d)** Circuit 1 & 3 **(e)** None of the aboveDo you have any suggestion that may improve this course?

Your Suggestions

..... ↓ *Your answers/roughs start here* ↓ .....

Name:

Brac University
Semester: Spring 2026
Course Code: CSE250
Circuits and Electronics
Section: 01
Faculty: SDS

Set **C**

Assessment: *Quiz 1*
Duration: 30 minutes
Date: April 11, 2026
Full Marks: 10

- ✓ No washroom breaks. Phones must be turned off. Using/carrying any notes during the exam is not allowed.
- ✓ All **4 question(s)** are compulsory. Marks allotted for each question are mentioned beside each question.
- ✓ Write your answers inside the indicated boxes (where applicable). If you run out of room, continue on the back page.
- ✓ Symbols have their usual meanings.

DO NOT WRITE ANYTHING ELSE INSIDE THIS BORDER

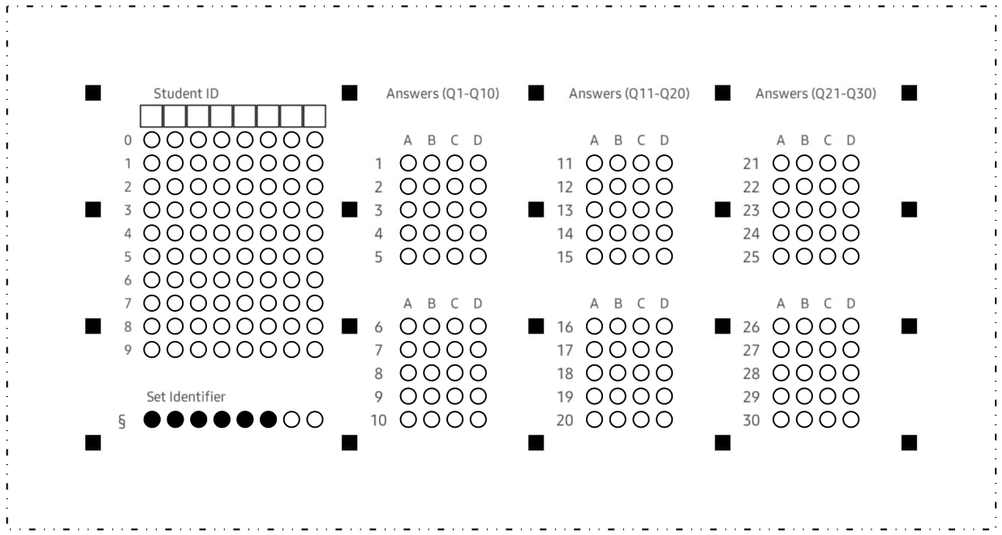

DO NOT WRITE ANYTHING ELSE INSIDE THIS BORDER

♢ Question 1 of 4 *[CO1] [1 mark]*

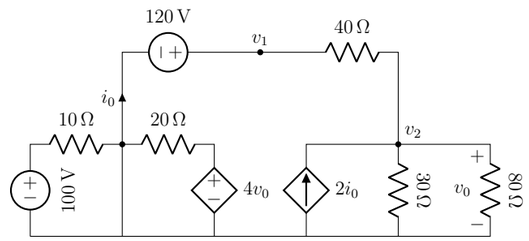

How many nodes are in this circuit?

(a) 3 **(b)** 6 **(c)** 4 **(d)** 5 **(e)** 7

♢ Question 2 of 4 *[CO3] [2 marks]*

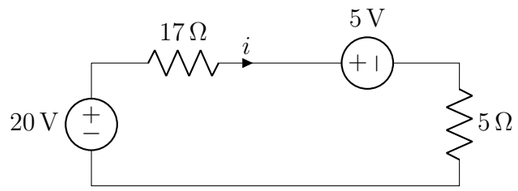

What's the relation between v_1, v_2 and i?

(a) $-20 - 17i - 5 + 5i = 0$
(b) $-20 - 17i + 5 + 5i = 0$
(c) $-20 + 17i - 5 + 5i = 0$
(d) $-20 + 17i + 5 + 5i = 0$
(e) None of the above

Which of the following circuits is/are impossible (violates Kirchhoff's laws)?

♢ Question 3 of 4 *[CO1] [2 marks]*

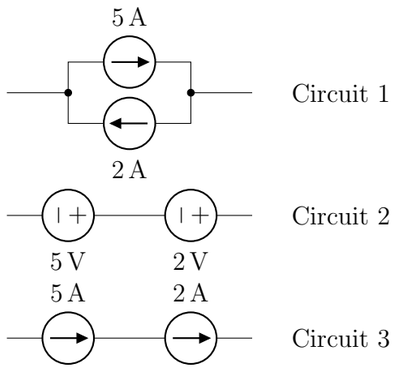

(a) Circuit 1 **(b)** Circuit 1 & 3 **(c)** Circuit 2
(d) Circuit 3 **(e)** None of the above

◇ **Question 4 of 4** ***[CO3] [5 marks]***

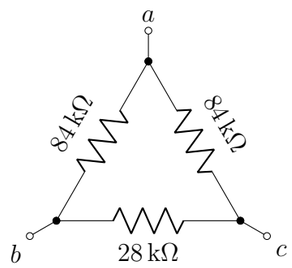

Which of the following statements is true?

(a) $R_{ab} = 84\,k\Omega, R_{bc} = 28\,k\Omega, R_{ca} = 84\,k\Omega$

(b) $R_{ab} = R_{bc} = R_{ca} = 16.8\,k\Omega$

(c) $R_{ab} = 48\,\Omega, R_{bc} = 24\,\Omega, R_{ca} = 48\,\Omega$

(d) $R_{ab} = 48\,k\Omega, R_{bc} = 24\,k\Omega, R_{ca} = 48\,k\Omega$

(e) None of the above

Do you have any suggestion that may improve this course?

Your Suggestions

..... ↓ *Your answers/roughs start here* ↓ .....

Name:

Brac University
Semester: Spring 2026
Course Code: CSE250
Circuits and Electronics
Section: 01
Faculty: SDS

Set **D**

Assessment: *Quiz 1*
Duration: 30 minutes
Date: April 11, 2026
Full Marks: 10

- ✓ No washroom breaks. Phones must be turned off. Using/carrying any notes during the exam is not allowed.
- ✓ All **4 question(s)** are compulsory. Marks allotted for each question are mentioned beside each question.
- ✓ Write your answers inside the indicated boxes (where applicable). If you run out of room, continue on the back page.
- ✓ Symbols have their usual meanings.

DO NOT WRITE ANYTHING ELSE INSIDE THIS BORDER

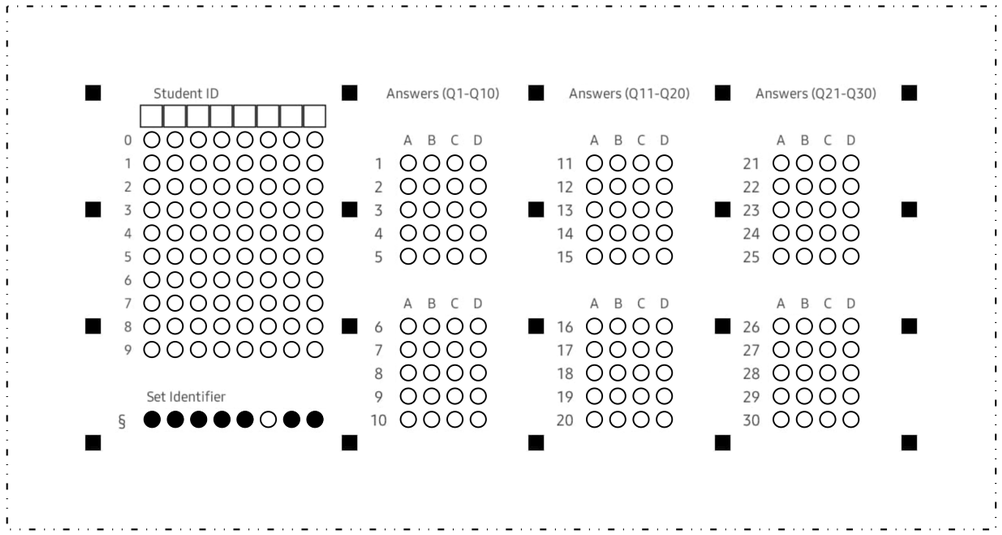

DO NOT WRITE ANYTHING ELSE INSIDE THIS BORDER

♢ Question 1 of 4 *[CO3] [2 marks]*

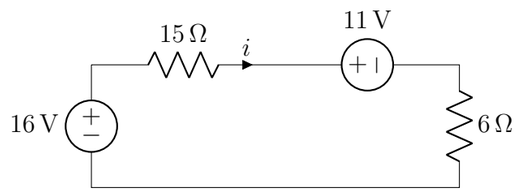

What's the relation between v_1, v_2 and i?

(a) $-16 - 15i + 11 + 6i = 0$
(b) $-16 + 15i - 11 + 6i = 0$
(c) $-16 + 15i + 11 + 6i = 0$
(d) $-16 - 15i - 11 + 6i = 0$
(e) None of the above

♢ Question 2 of 4 *[CO1] [1 mark]*

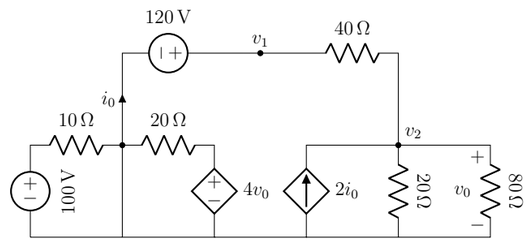

How many nodes are in this circuit?

(a) 5 **(b)** 3 **(c)** 6 **(d)** 7 **(e)** 4

♢ Question 3 of 4 *[CO3] [5 marks]*

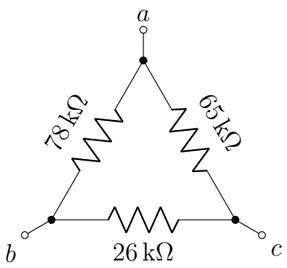

Which of the following statements is true?

(a) $R_{ab} = 42\,\Omega, R_{bc} = 22\,\Omega, R_{ca} = 40\,\Omega$

(b) $R_{ab} = 42\,k\Omega, R_{bc} = 22\,k\Omega, R_{ca} = 40\,k\Omega$

(c) $R_{ab} = 78\,k\Omega, R_{bc} = 26\,k\Omega, R_{ca} = 65\,k\Omega$

(d) $R_{ab} = R_{bc} = R_{ca} = 15\,k\Omega$

(e) None of the above

Which of the following circuits is/are impossible (violates Kirchhoff's laws)?

◇ **Question 4 of 4** ***[CO1] [2 marks]***

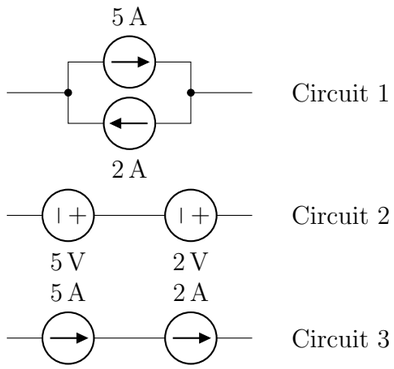

(a) Circuit 1 **(b)** Circuit 2 **(c)** Circuit 1 & 3 **(d)** Circuit 3 **(e)** None of the aboveDo you have any suggestion that may improve this course?

Your Suggestions

..... ↓ *Your answers/roughs start here* ↓ .....