# Solidworks FEA

By Example

# Outline

- What is FEA?
- General FEA procedure: model, layout, fixtures, loads, meshing, analysis
  - Don’t apply fixtures and loads to the same feature, it’s non-physical.
  - Make sure the mesh density has enough resolution to model smallest feature.
- Stationary part FEA example: bearing housing
  - Pin fixture - modeling welds
  - Force - it does what you think it does
  - Bearing load - better representation
  - **Meshing - heuristics**
  - **Results - what to look for**
- Rotating part FEA example: front shaft
  - Roller fixture - modeling bearing supports
  - Remote loads - modeling belt forces
  - Moment - modeling keyways
  - **Limits of FEA - keyways**
- Assembly FEA introduction
- Assembly FEA example: Belt tensioner assembly
  - Modeling loads
  - Connections and interactions
- Advanced FEA: uprights
  - Modeling suspension
- Lightweighting example: Front and Rear hubs
  - Lightweighting procedure: define load cases, check for load distribution and SF, change model based on stress concentrations, repeat

# What does FEA do?

FEA **approximates** stresses and deformations of geometry by converting your CAD model into “elements”

Each element modeled as points (nodes) connected by “springs”

- Stiffness of “springs” based on material properties and element shape

In Solidworks, elements are 10-node tetrahedrons

- Fun fact: each element has constant internal strain, which is why the strain plot looks like triangles of solid color!

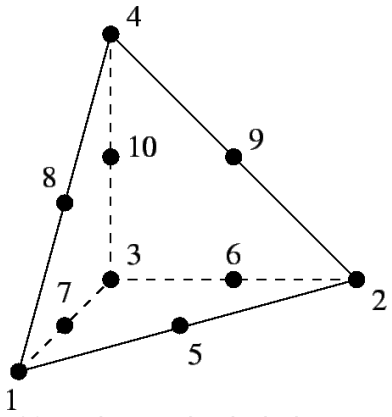

10-node tetrahedral element

# Important Info

NEVER run FEA in Kenesto!!!

1. Make local copy of parts
2. Close Solidworks
3. Close Kenesto
4. Restart Solidworks
5. Turn off Kenesto add-in
6. Open local copy
7. Run FEA

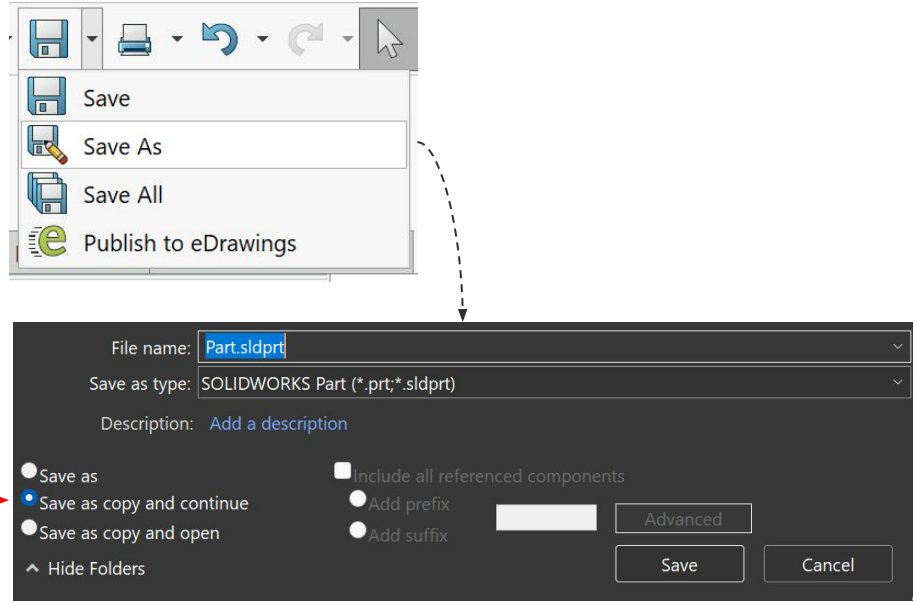

# General FEA procedure in Solidworks

1. Model: determine fixtures and loads from design and/or data
2. Layout: position parts (in assemblies)
3. Fixtures: set what doesn’t move
4. Loads: apply forces
5. Meshing: adjust accuracy and performance
6. Analysis: evaluate design

This presentation will cover several examples to explain how FEA can be used to model real loading scenarios.

# Stationary Part FEA: Bearing Housing

Path: TRB24\Powertrain\Front Shaft\TRB24-502-002a

- Tabs welded for mounting
- Single bearing load

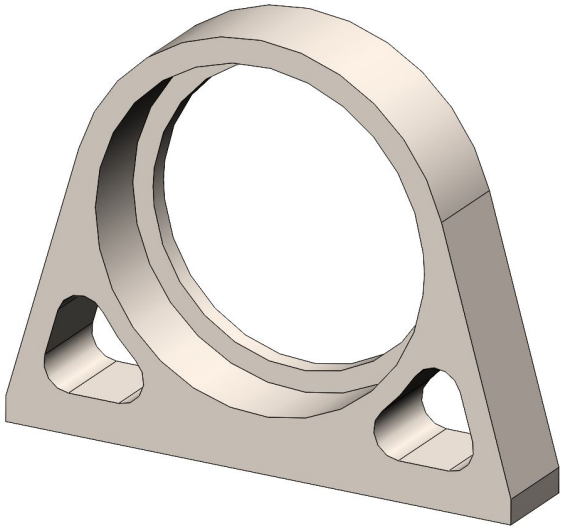

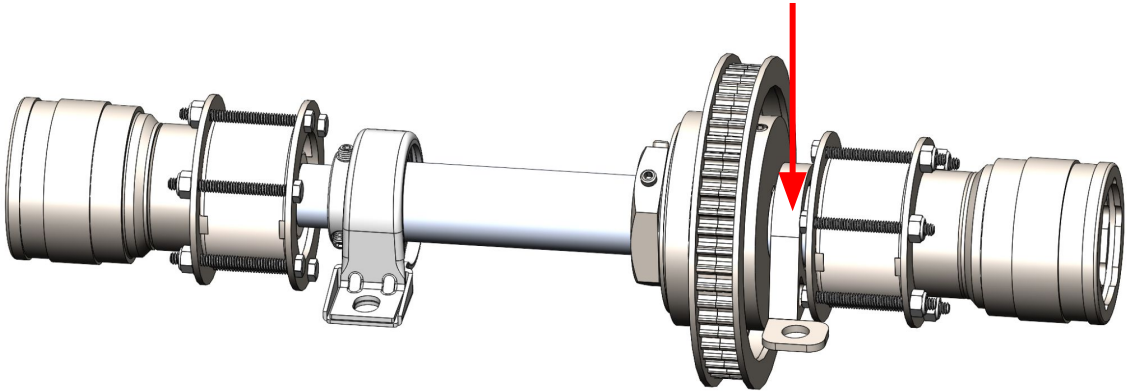

# Step 1: Modeling Fixtures and Loads

Forces from FBD:

- RCy and RCz

Values from CDR:

RCy = 52.35 lbf

RCz = -567.74 lbf

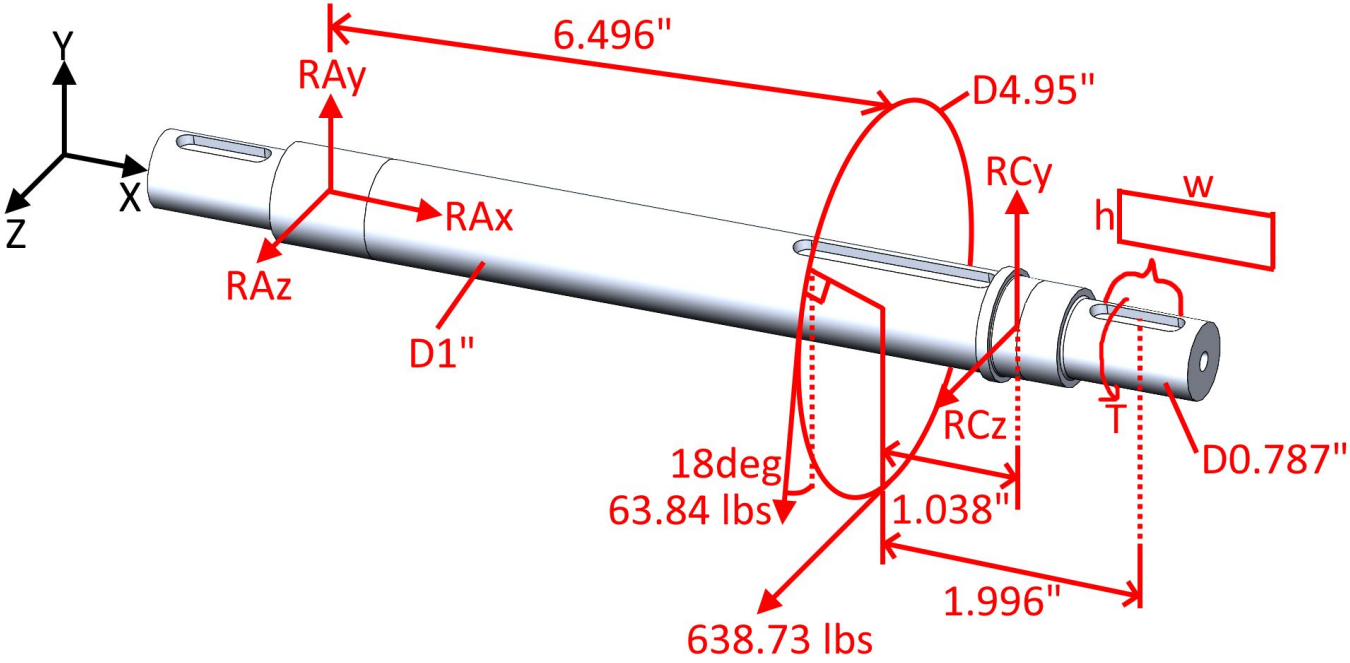

# Step 2: Part Layout

Single part, so create static study for that part

1.

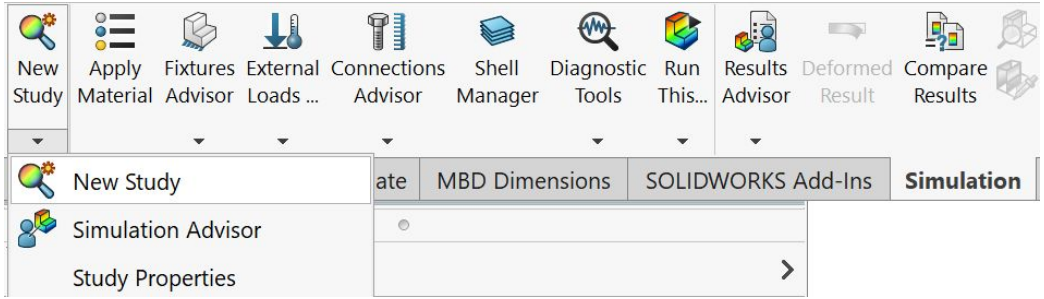


2.

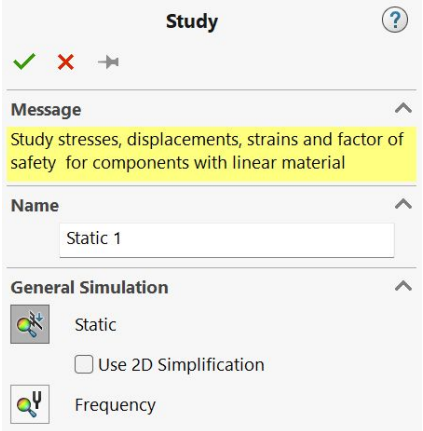

# Step 3: Fixtures

Fixed Geometry: constrains translation and rotation in all directions

**Applicable here because of the weld at these faces.**

Fixed geometry is usually not the best choice for a fixture.

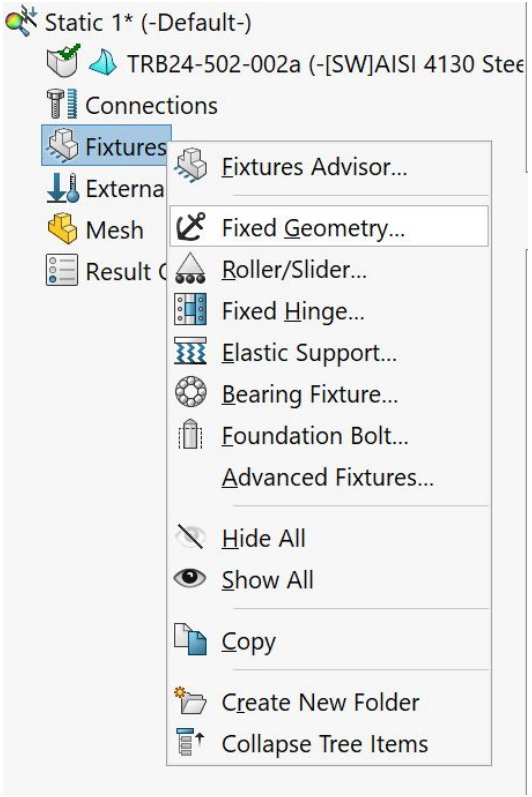


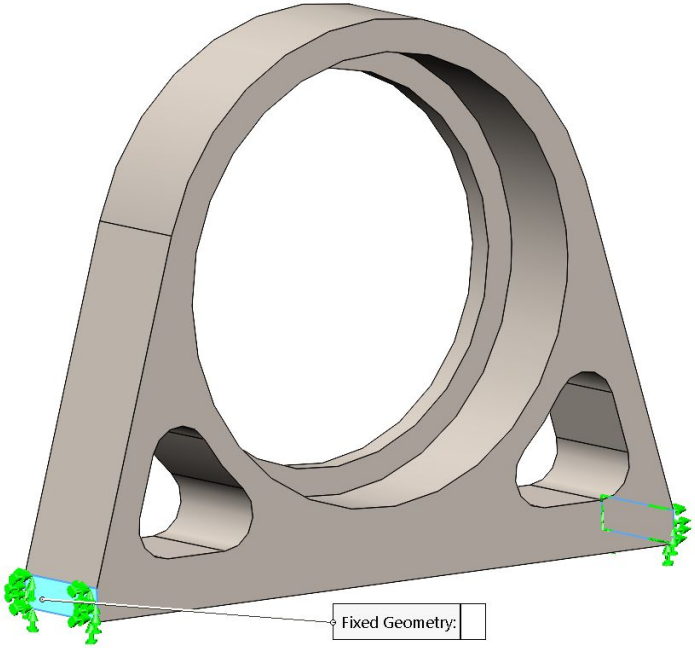

# Step 4: Loads

Force: applies a known force to a feature

This will be used to model the loads from the bearing.

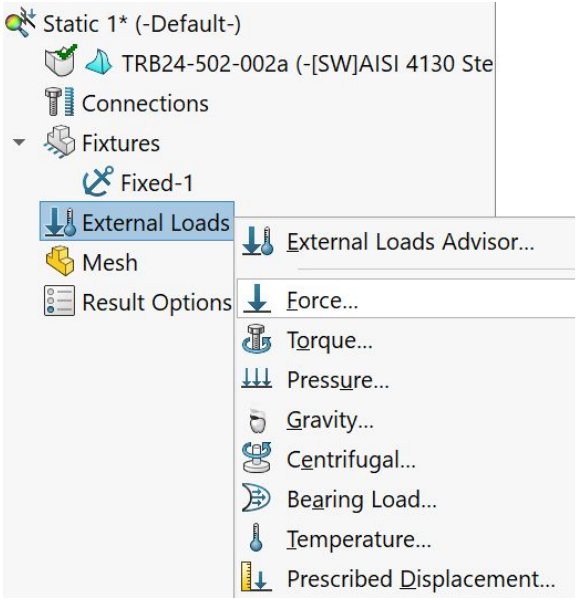


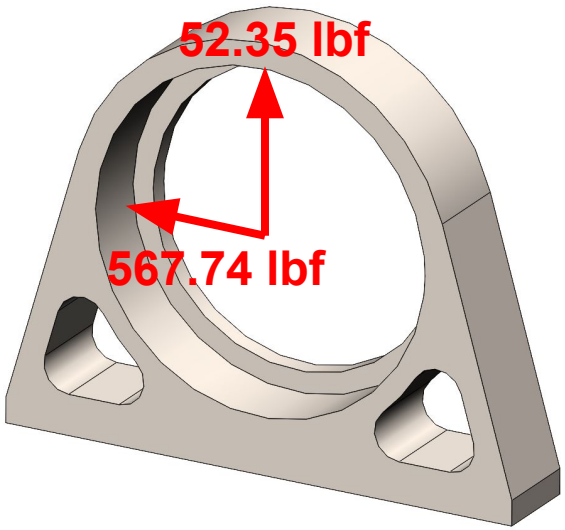

# Force Load

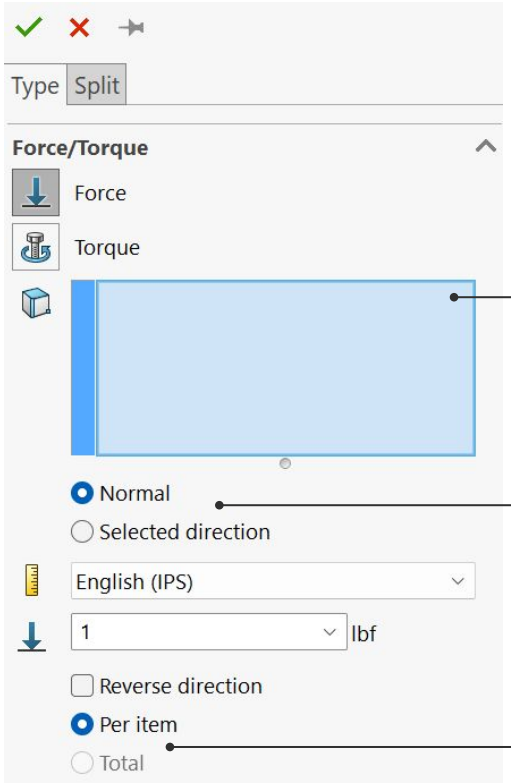


Faces/edges where the force is applied

Direction of force:

- Normal: normal to faces & along edges
- Selected direction: select edge/axis as force direction

Apply force at each selection or in total (VERY IMPORTANT)

# Applying Horizontal Force

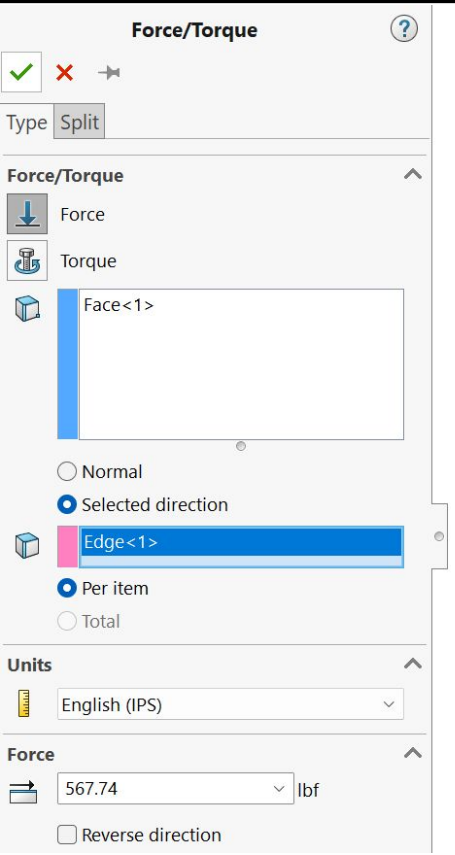


Because part is symmetric, horizontal direction doesn't matter as long as we're consistent

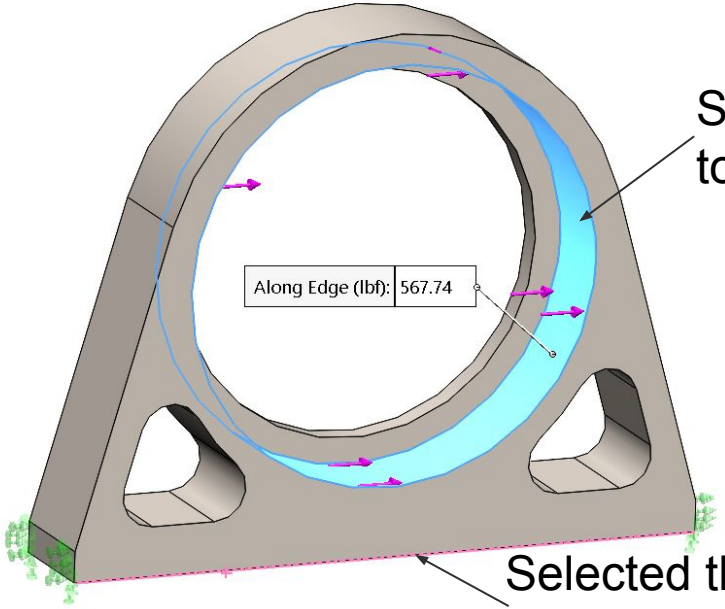


Selected this face to apply force

Selected this edge as force direction

# Applying Vertical Force

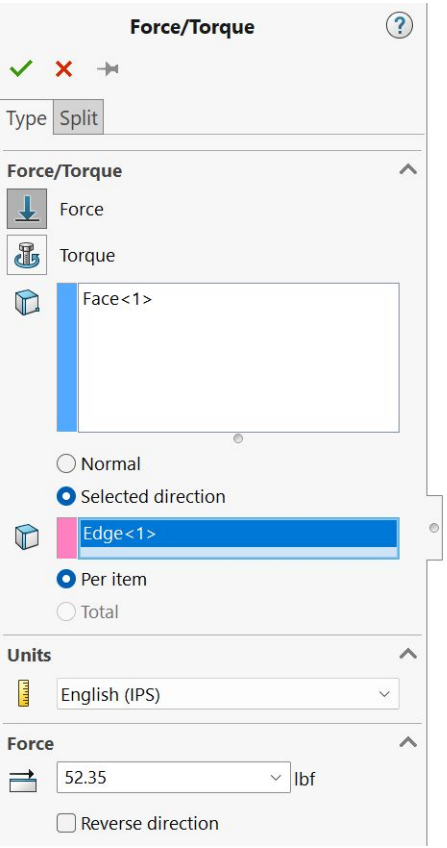


Ensuring force is downwards, per the FBD

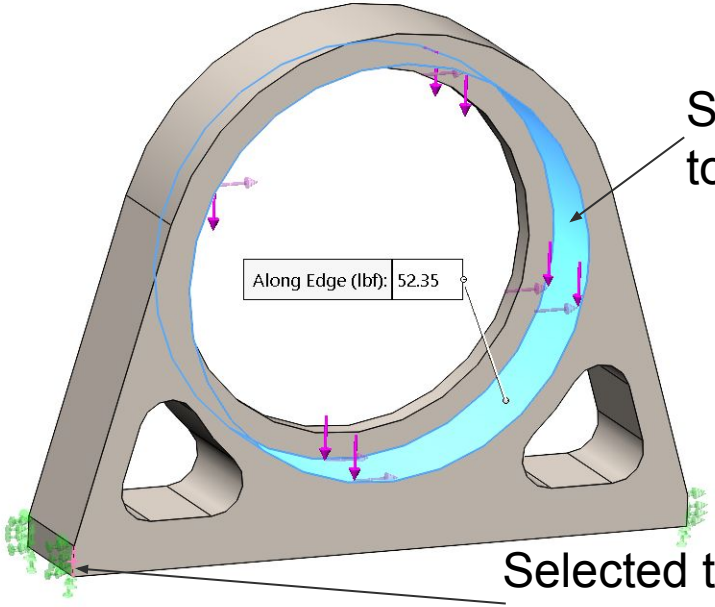


Selected this face to apply force

Selected this edge as force direction

# Fixtures and Loads Result

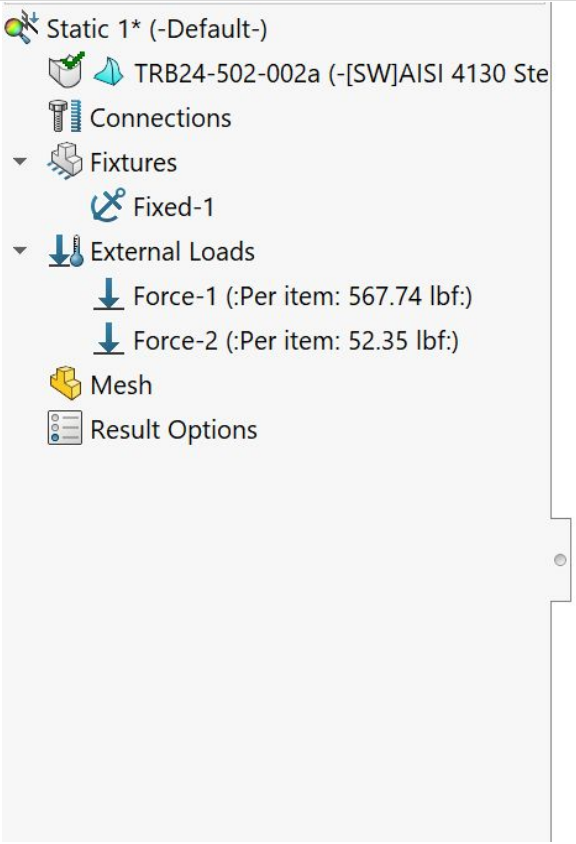


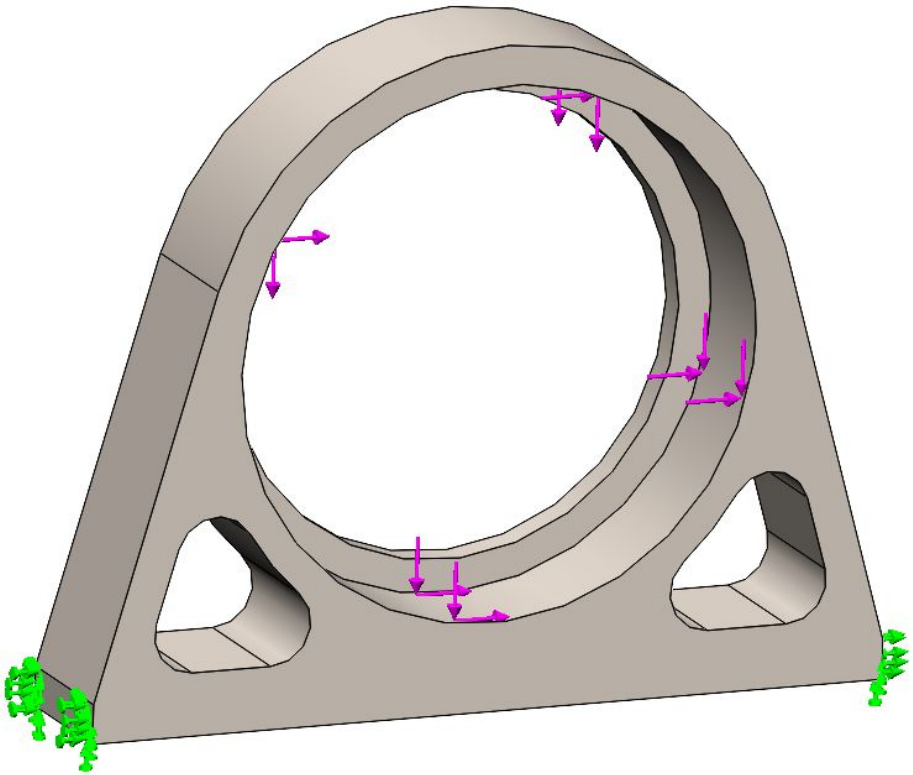

# Step 5: Meshing

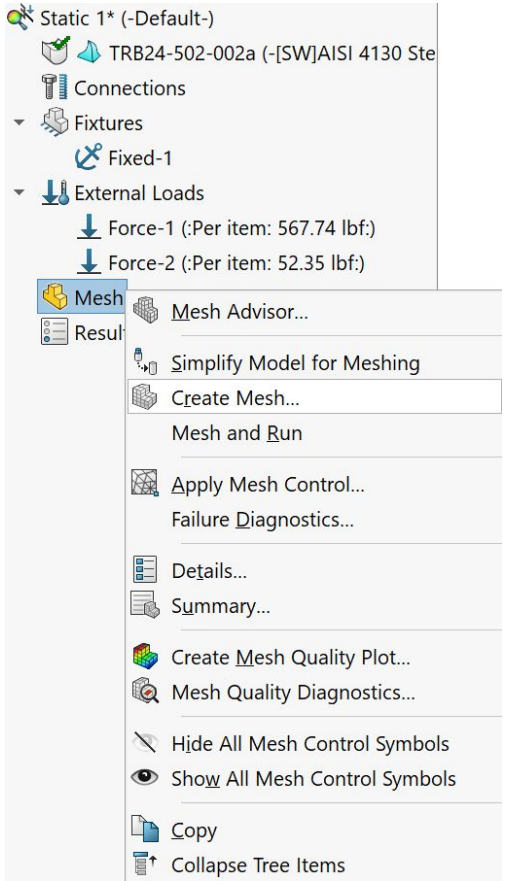


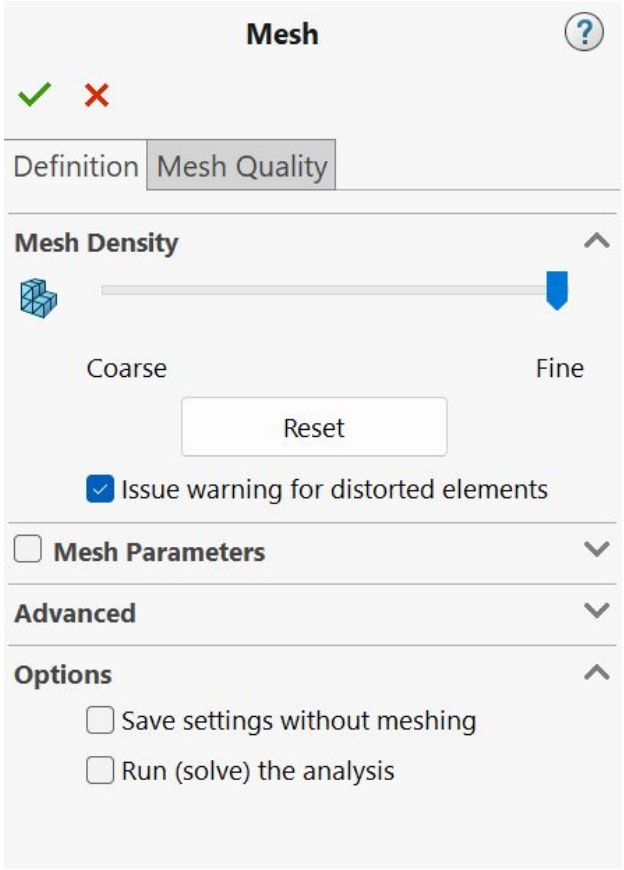


By default, use a fine mesh.

# Meshing Result

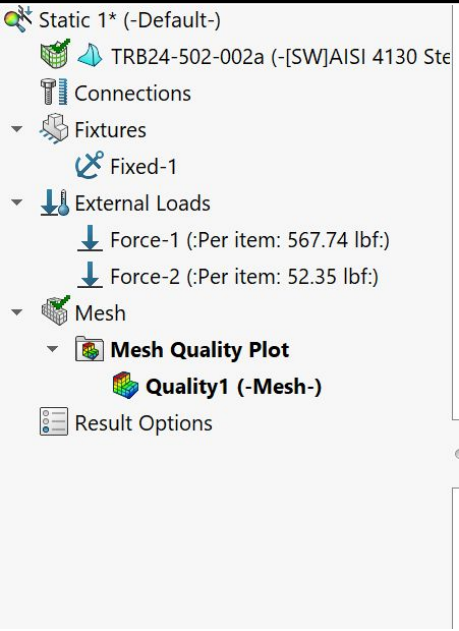


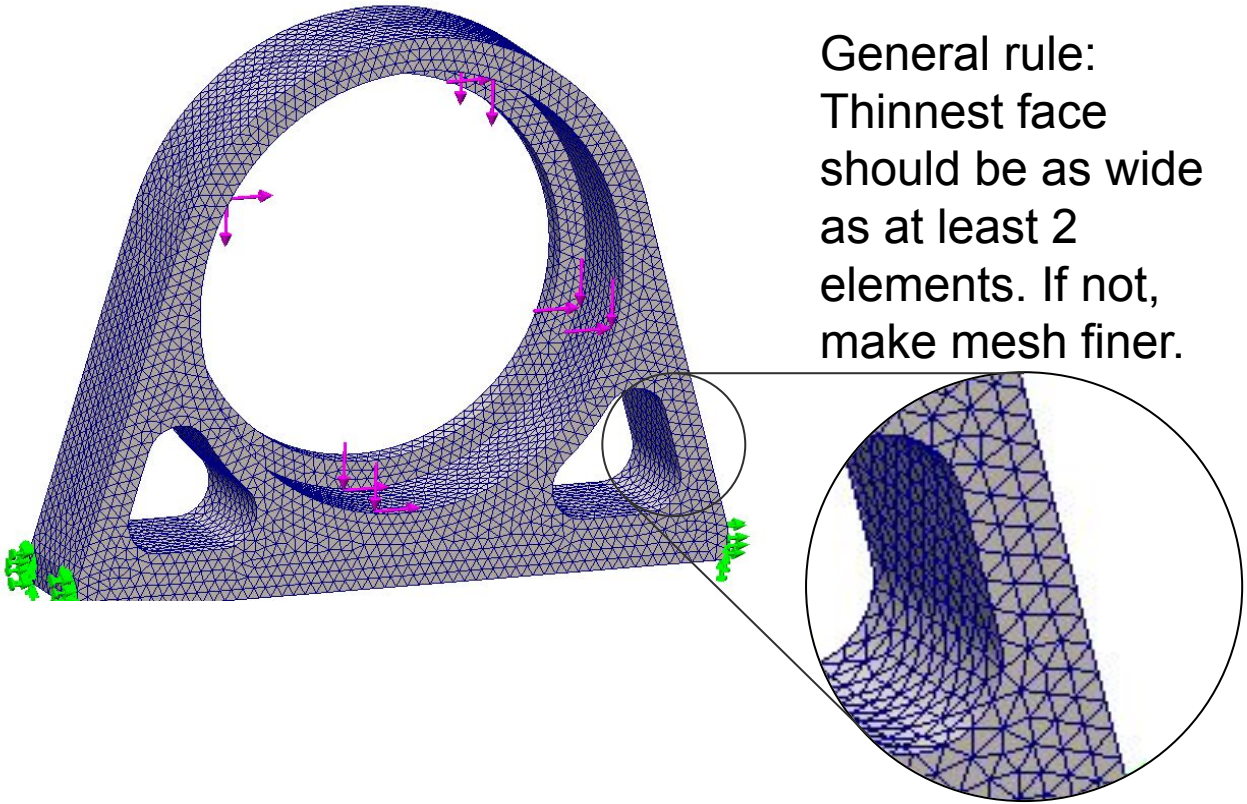

General rule: Thinnest face should be as wide as at least 2 elements. If not, make mesh finer.

# Step 6: Analysis

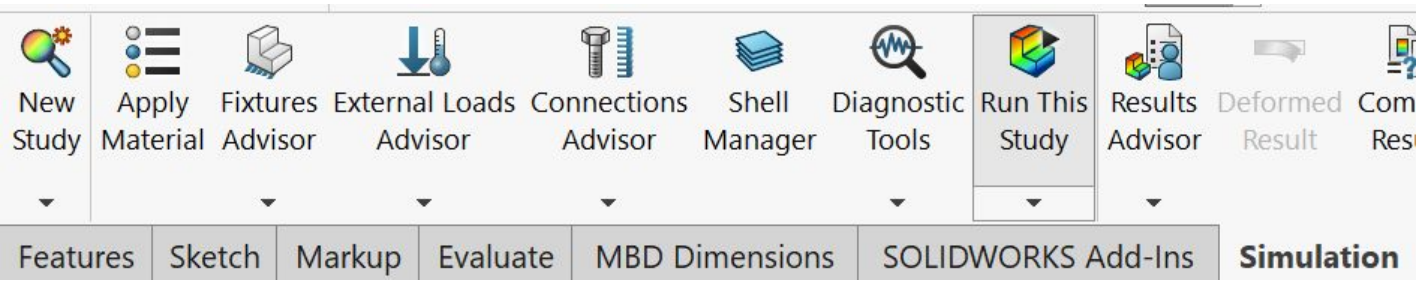


This may take a while, or only a few seconds, depending on mesh complexity and computer hardware.

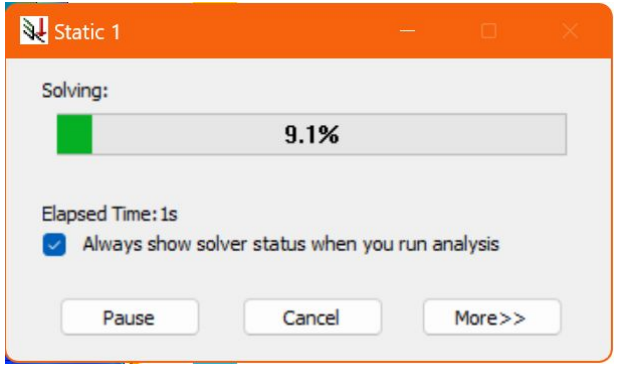

# Von Mises Stress Plot

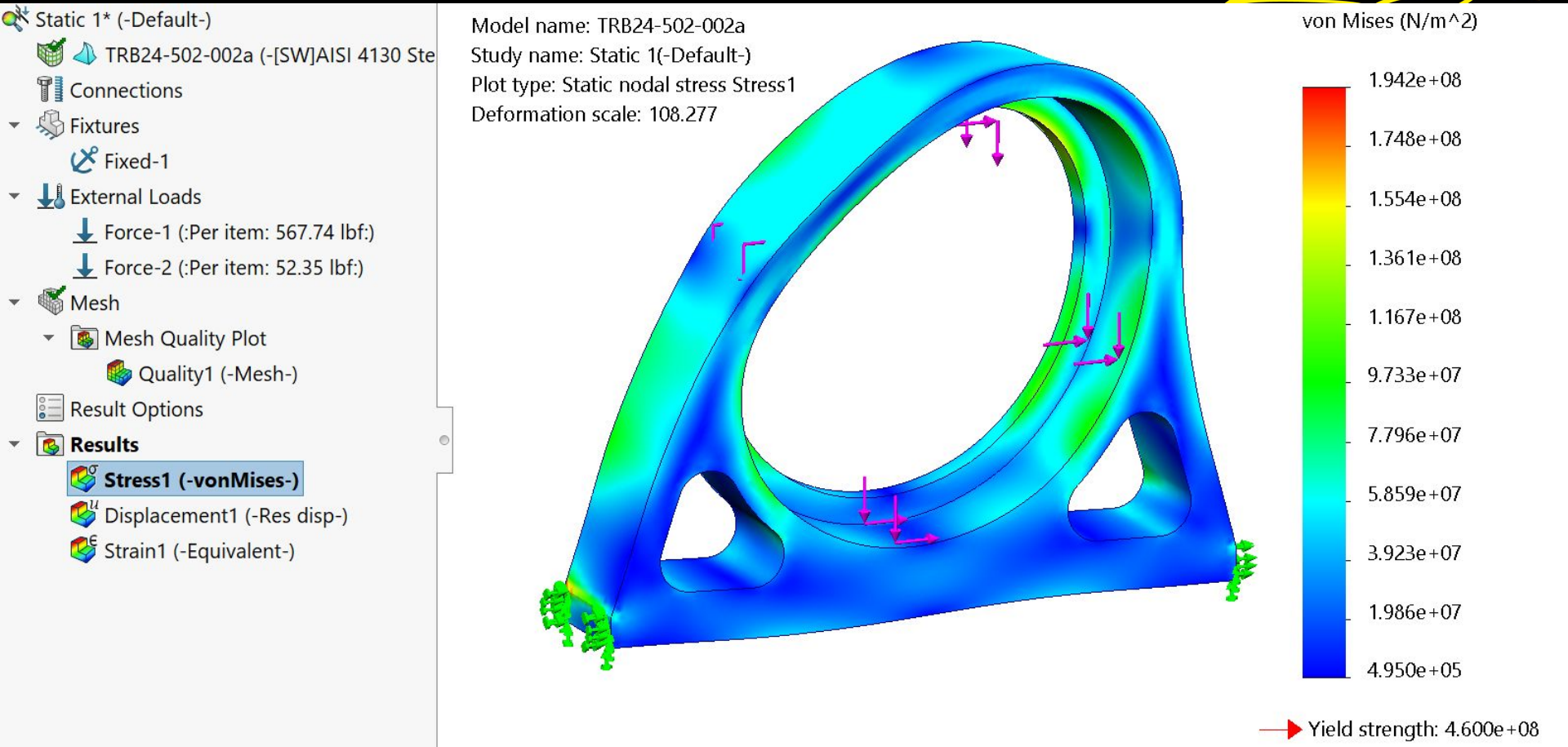

# Von Mises Stress Plot with Part Failure

Changing material from 4130 steel to Delrin plastic, for example:

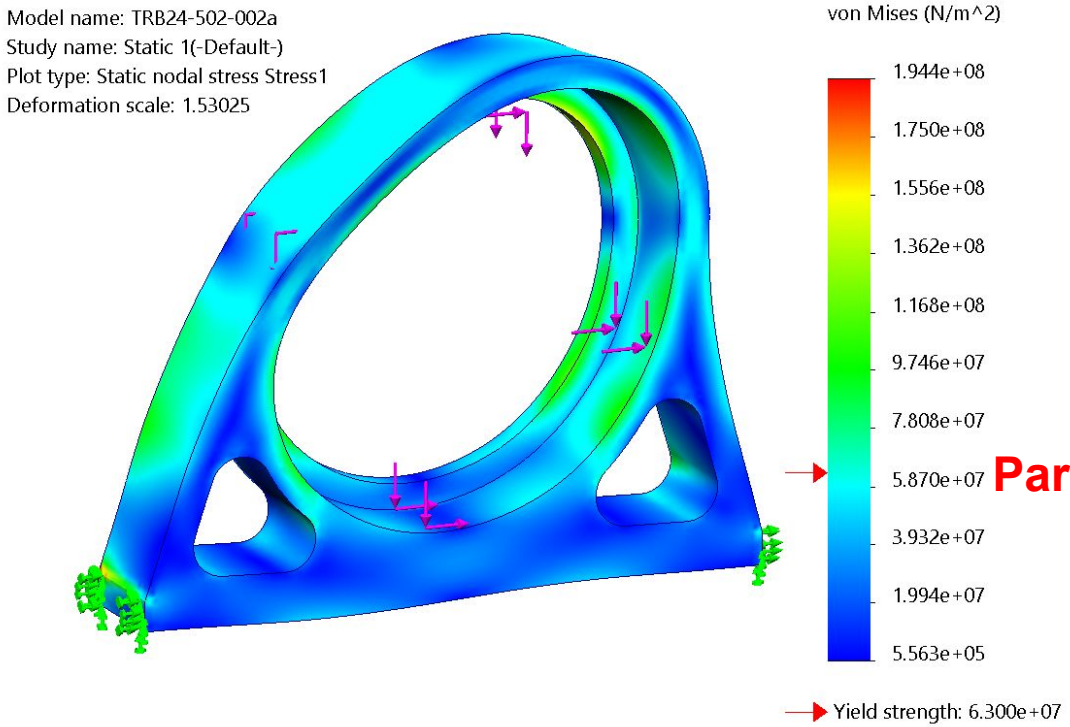


**Part fails at red arrow!**

# Determining Safety Factor

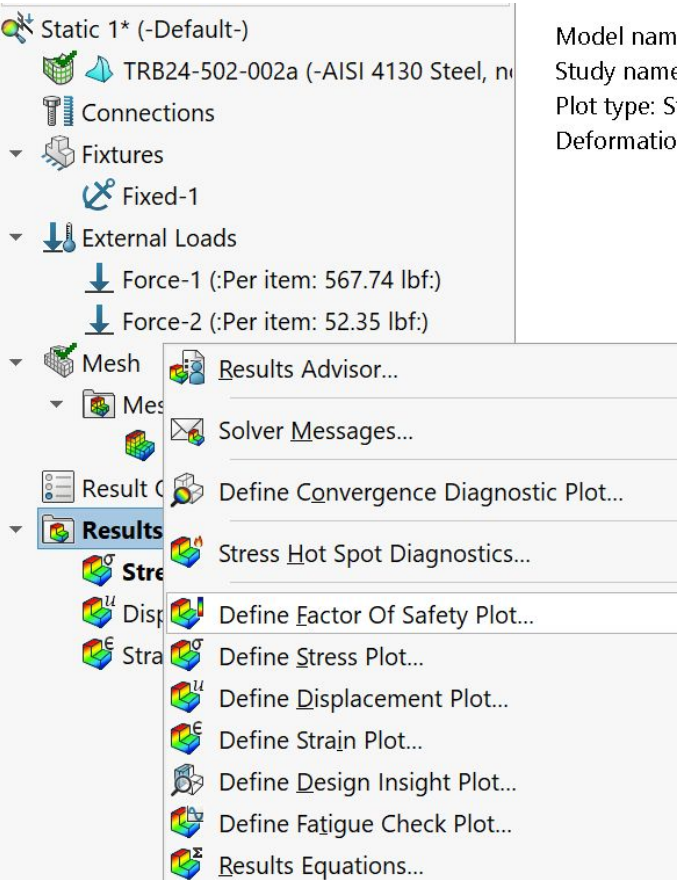


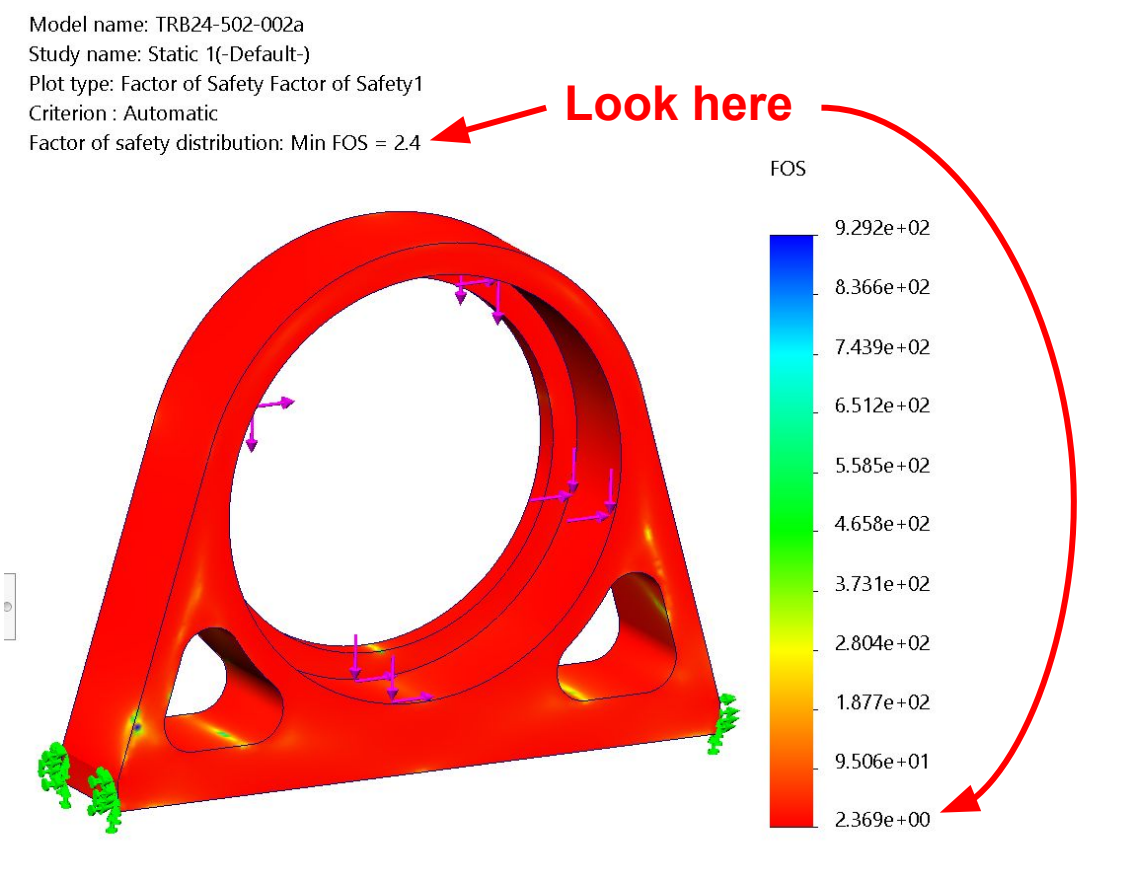

# Safety Factor Result

FOS is 2.4, which is severely overbuilt.

Target FOS for parts:

- Mission-critical: 2.0 (failure risks DQ from comp or completion of events)
- Normal: 1.5 (failure requires lengthy repairs)
- Lightweight: 1.2 (if part is easily swapped, or if loads & fixtures are known very accurately)

# Useful Analysis: Max Stress Location

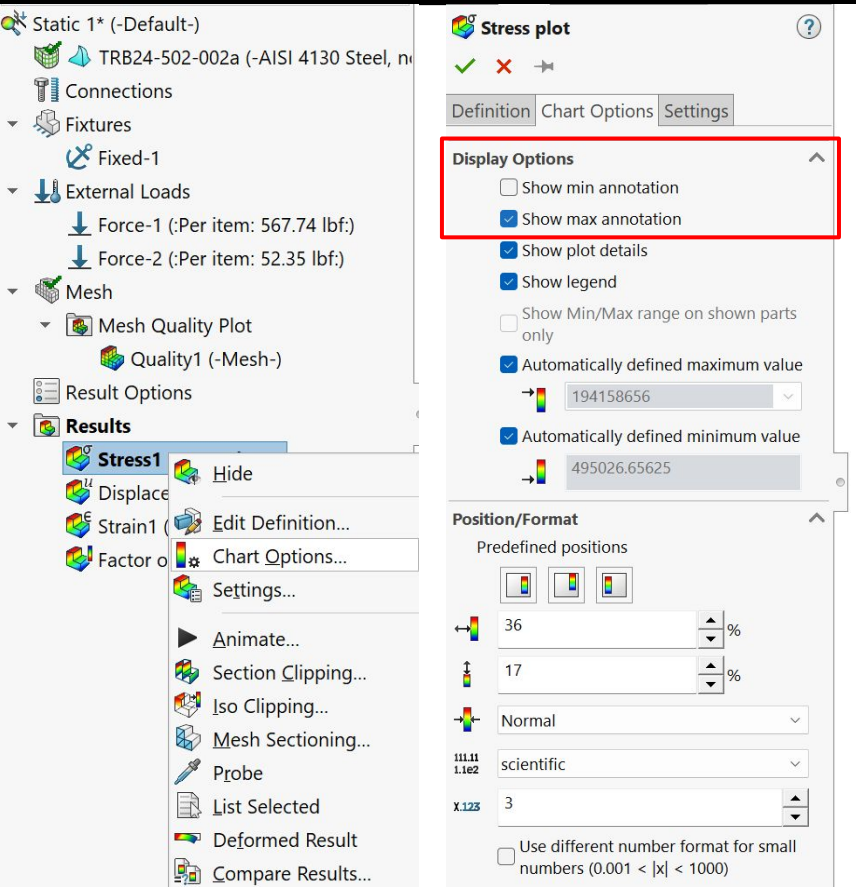





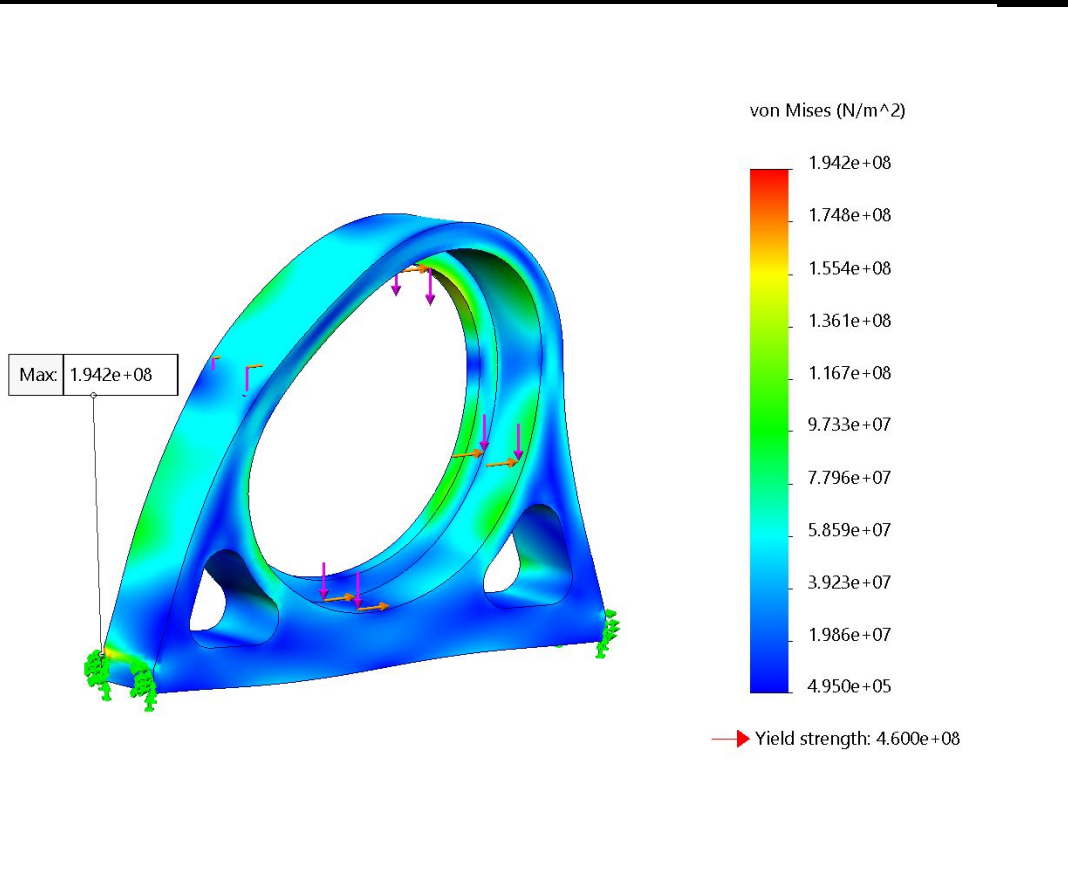

# Useful Analysis: Section Clipping

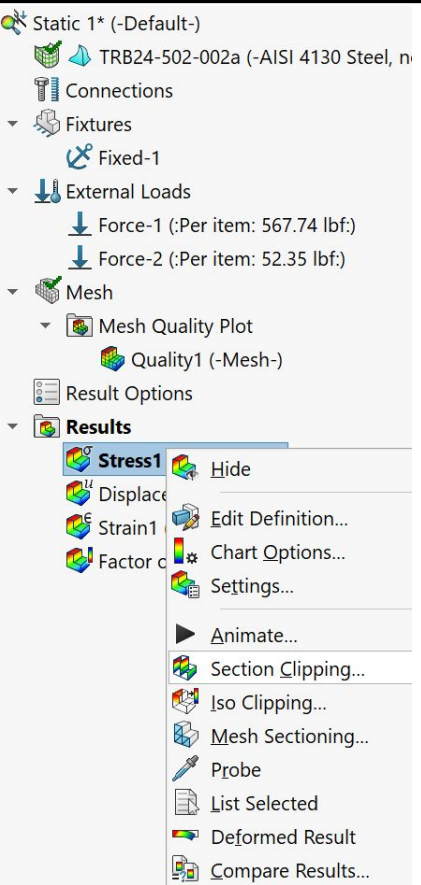


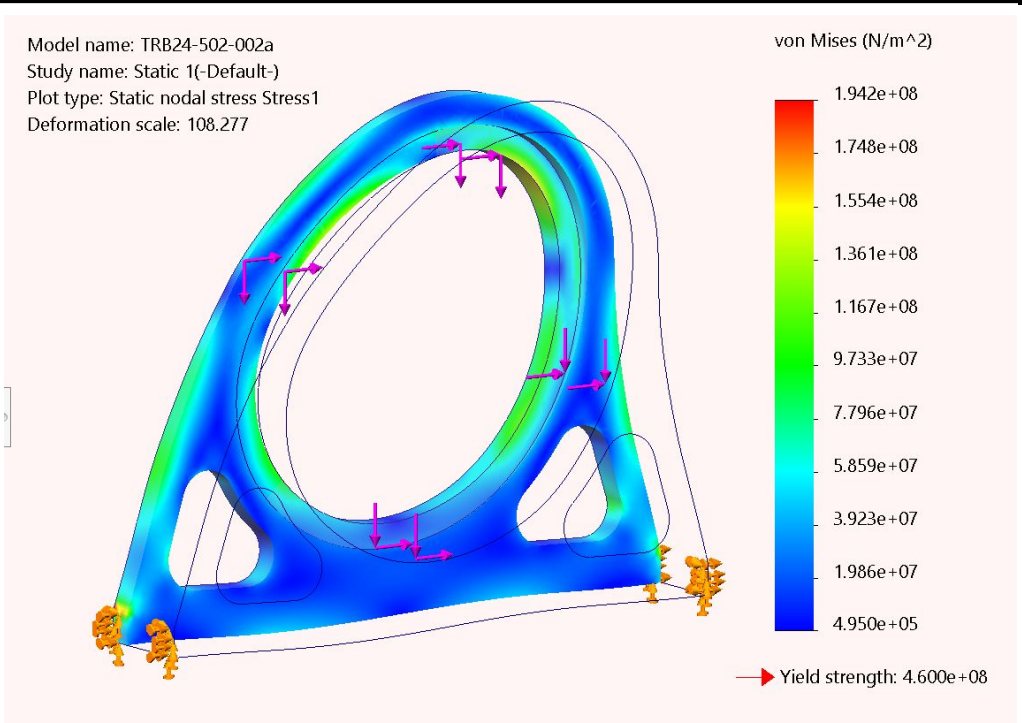


Useful for seeing internal stresses.

# Useful Analysis: Iso Clipping

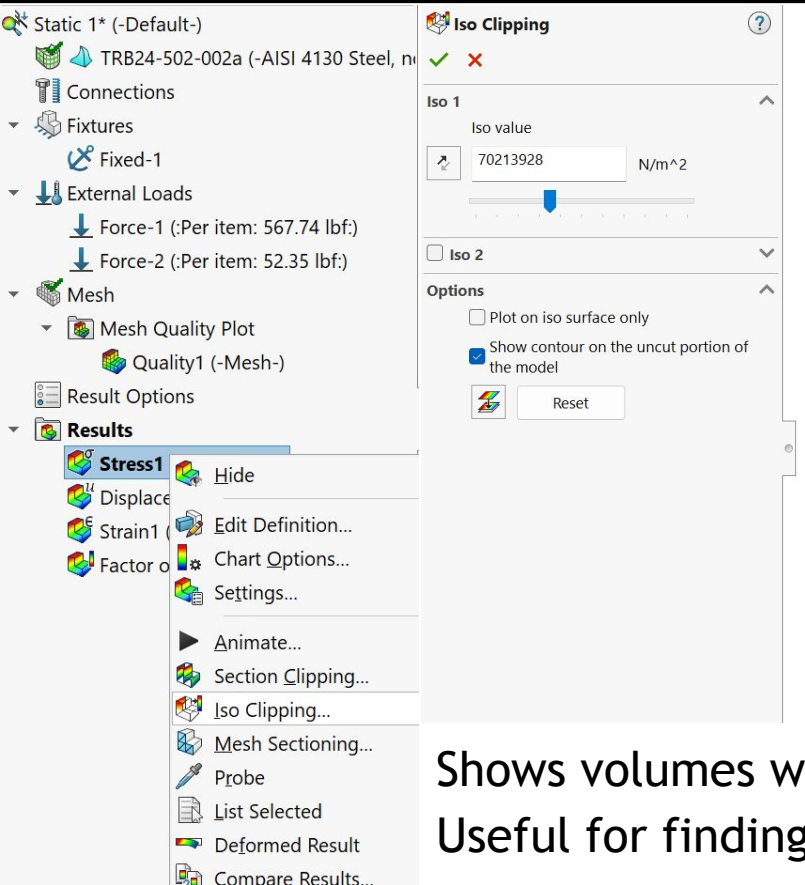





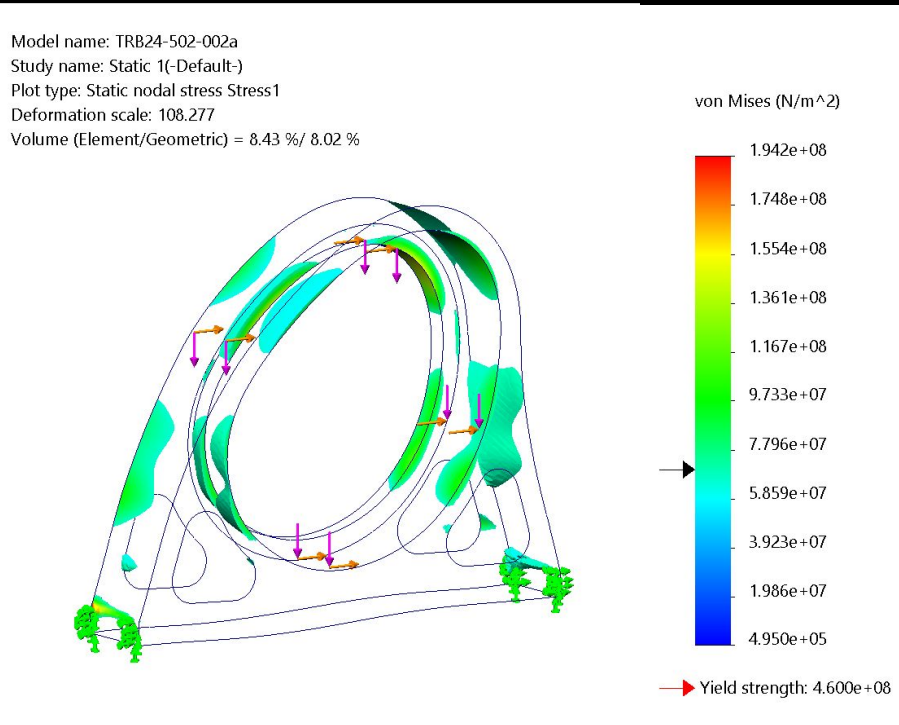


Shows volumes which are above/below a certain stress value.
Useful for finding stress concentrations and lightweighting.

# Bearing Loads

Forces distributed evenly over a face do not accurately model loads from bearings.

Bearing loads are a nonlinear distributed force.

Luckily, Solidworks FEA can apply bearing loads!

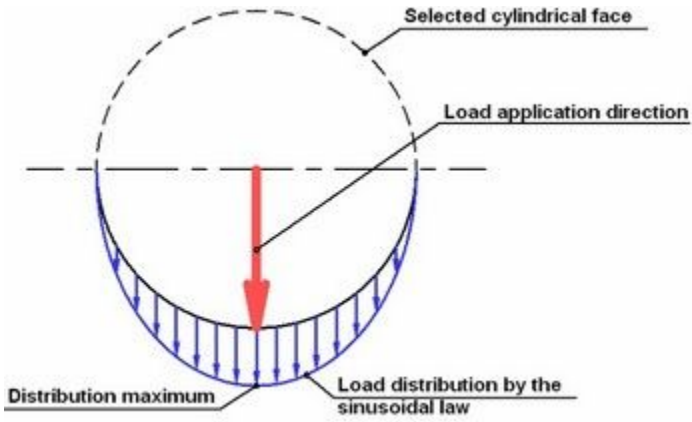

# Applying Bearing Loads

Create a point in the center of the bearing face:

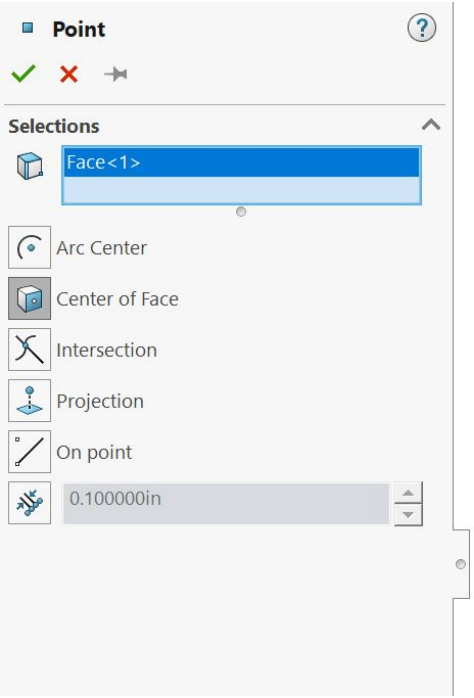


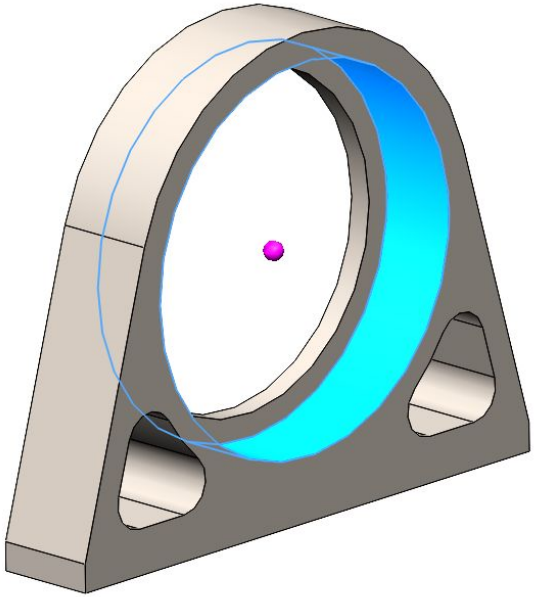

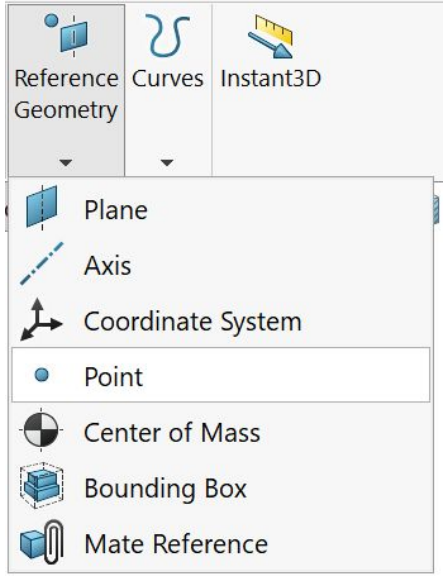

# Applying Bearing Loads

Create a coordinate system at that point:

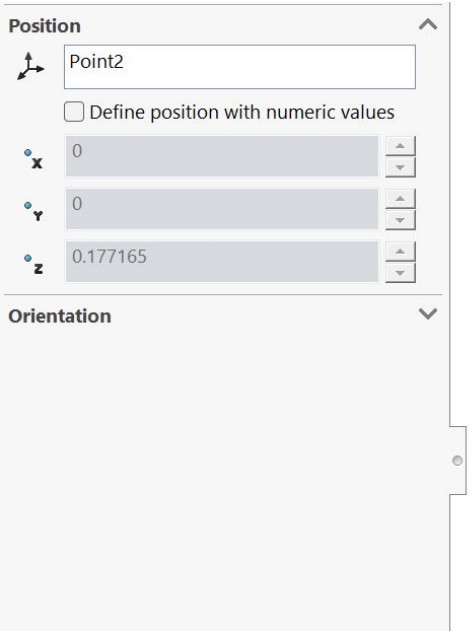

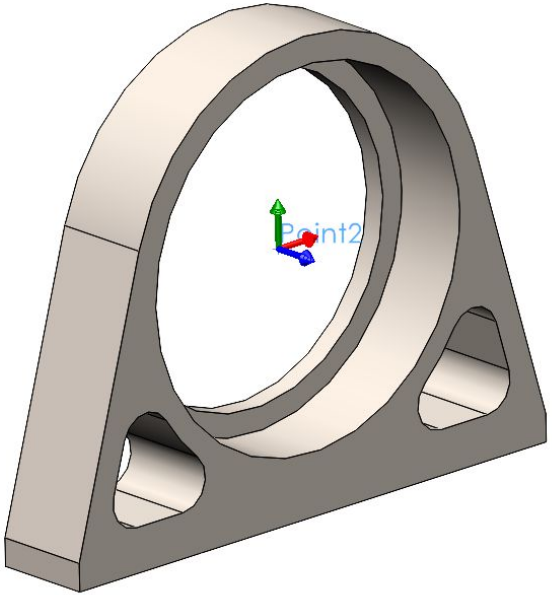


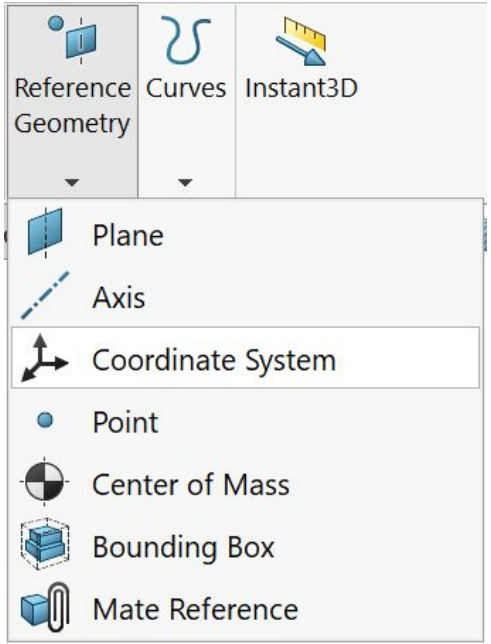

# Applying Bearing Loads

Create the horizontal bearing load in the FEA study:

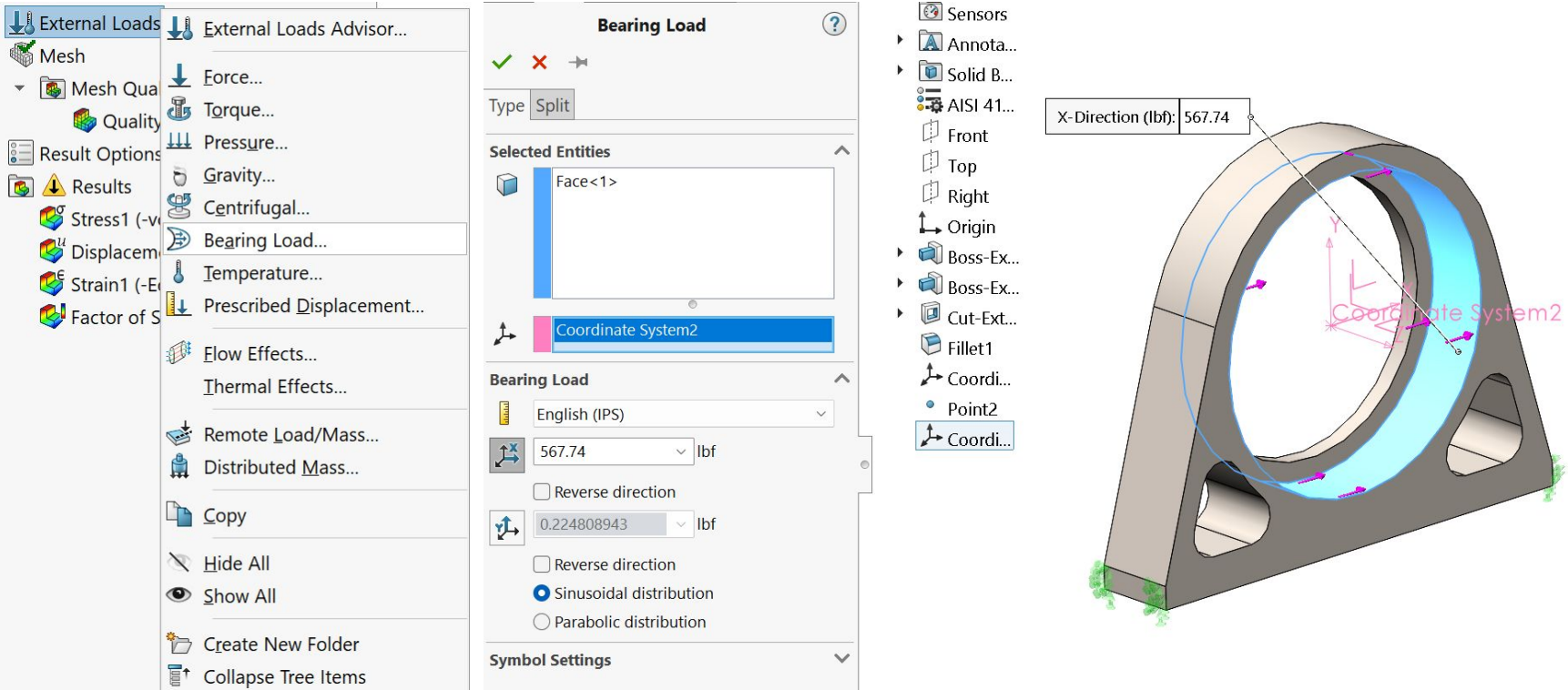

# Applying Bearing Loads

## Create the vertical bearing load in the FEA study:

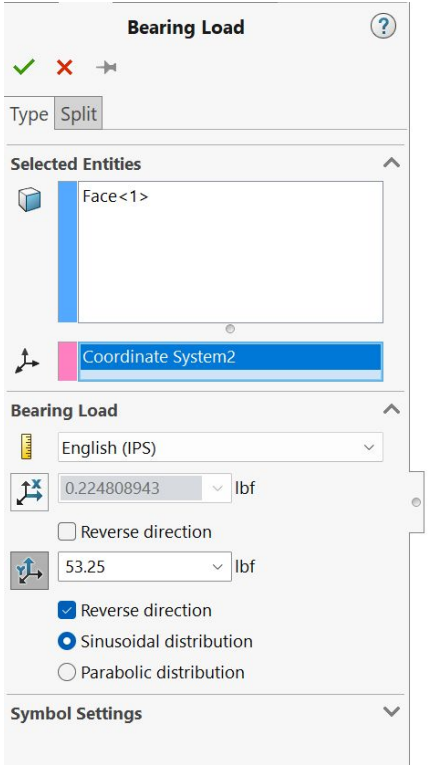


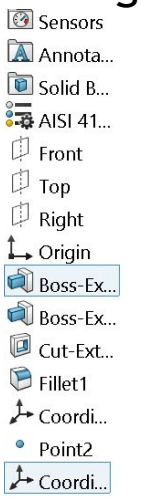


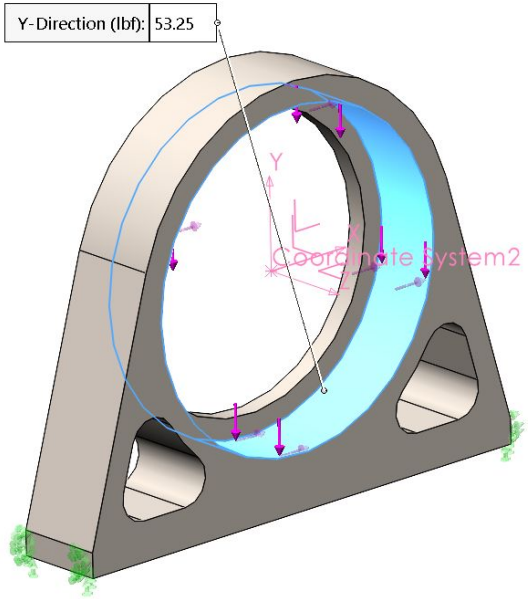

# Bearing Load Results

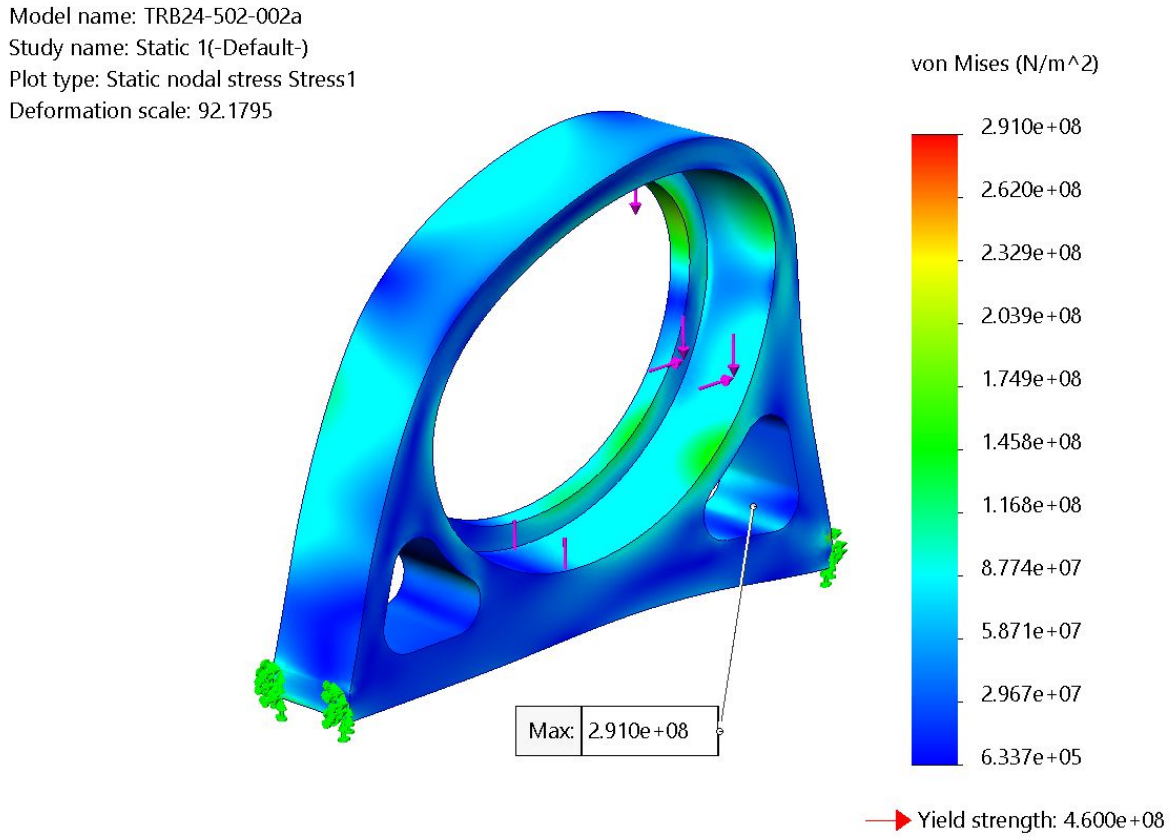


Max stress increased from 1.94e8 Pa to 2.91e8 Pa because bearing loads have more concentrated force.

SF is now 1.58, much closer to a normal value.

The assumption of a uniform distributed load was misleading.
Verifying assumptions in FEA is extremely important!

# Rotating Part FEA: Front Shaft

Path: TRB24\Powertrain\Front Shaft\TRB24-502-001

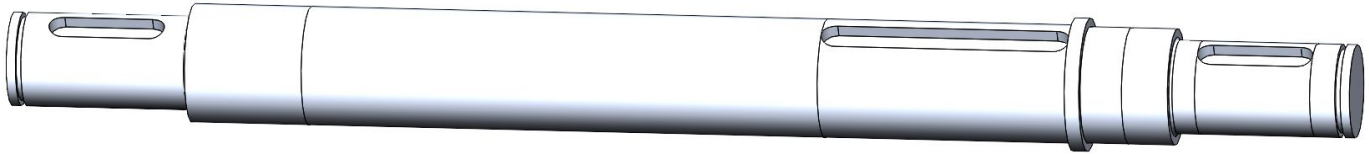

We want to verify that the diameter step-down will not cause failure.

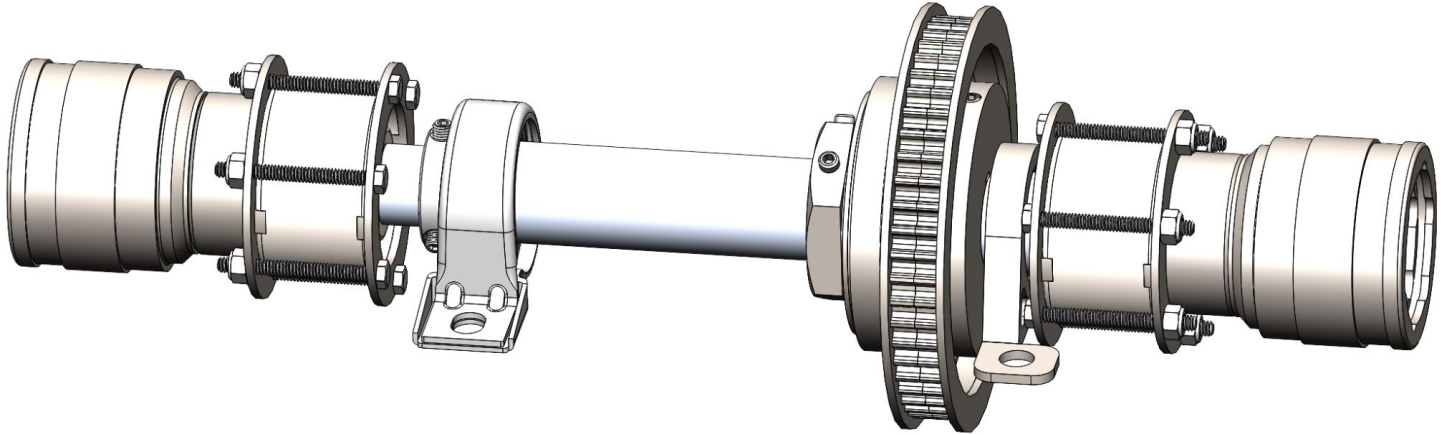

# Step 1: Modeling Fixtures and Loads

RAx = 61.23 lbf
RAy = 8.365 lbf
RAz = -90.72 lbf
RCy = 52.35 lbf
RCz = -567.74 lbf

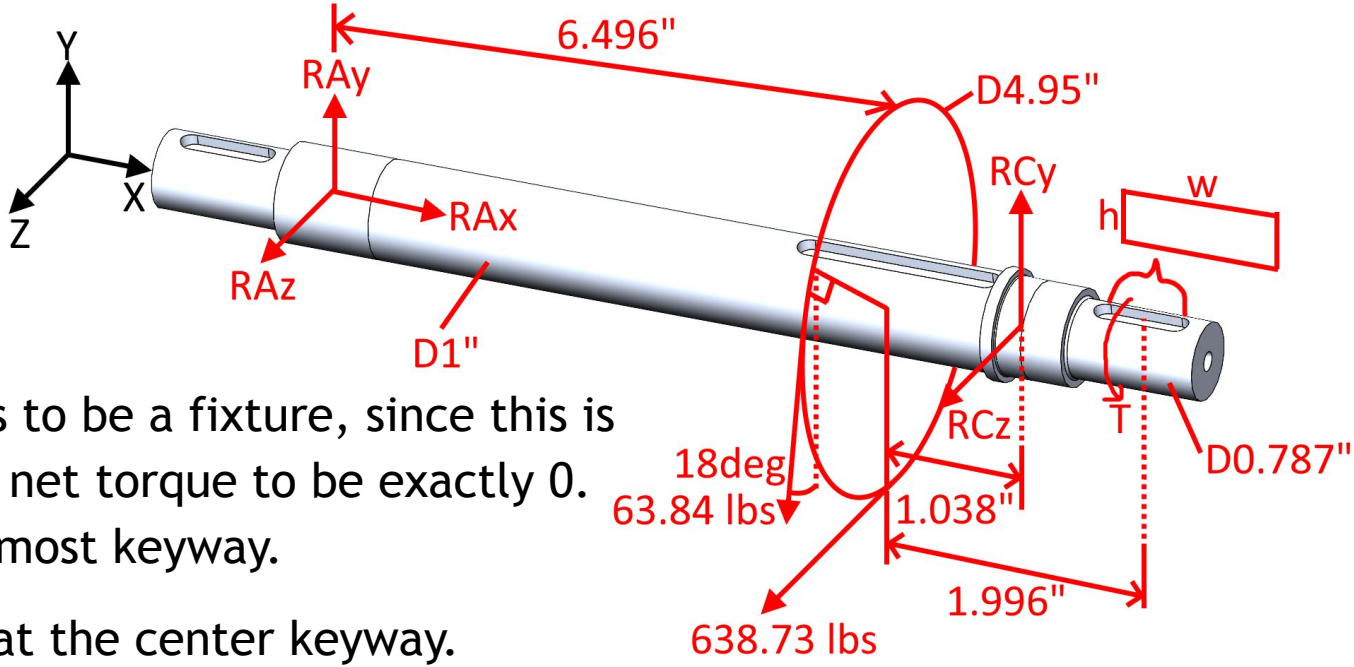


Reaction torque T needs to be a fixture, since this is a static study, requiring net torque to be exactly 0. T is applied at the rightmost keyway.

Belt forces are applied at the center keyway.

As a worst case, only 1 clutch will react the torque.

# Step 2: Part Layout

Single part, so create static study for that part.

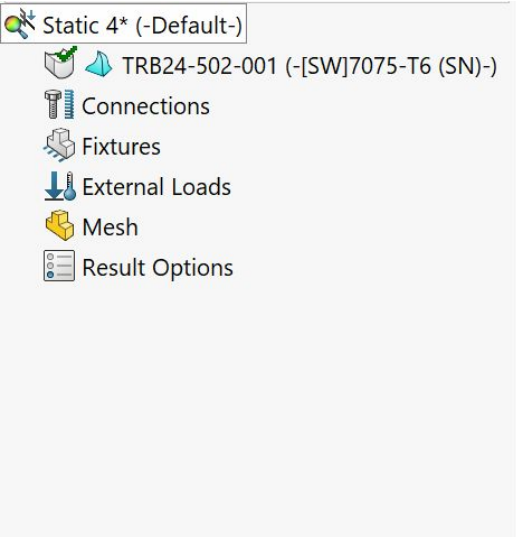


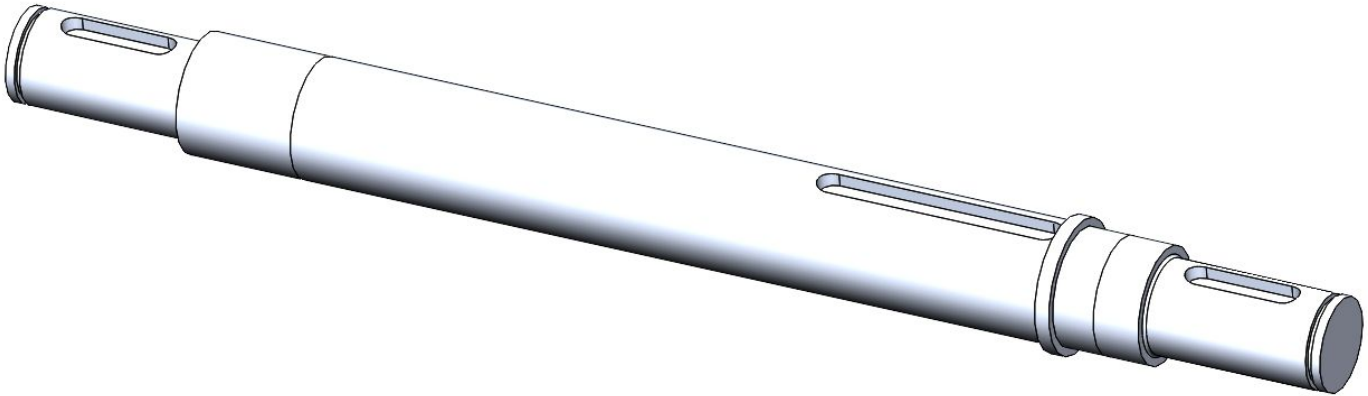

# Step 3: Fixtures

The front shaft has bearing supports on these faces. However, the highlighted sections are not made using regular features like extrude or cut.

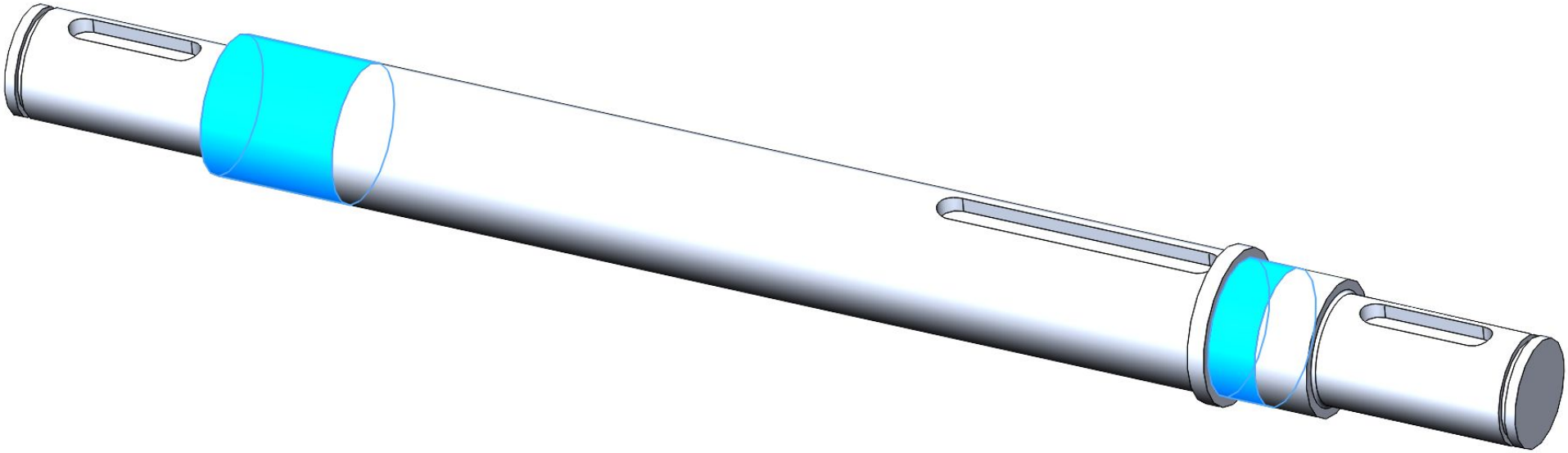

# Splitting Faces: Split Lines

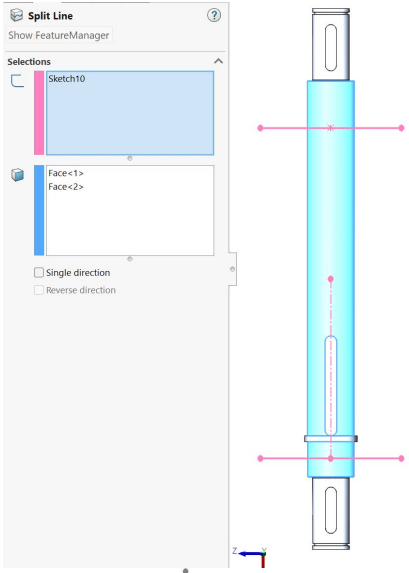


Split Line is a feature that allows splitting a face into multiple sections.

This is important for FEA, since a force might be applied to only a section of a face.

A split line feature is applied by sketching lines where the faces should be split, then projecting the lines onto the part to split the faces.

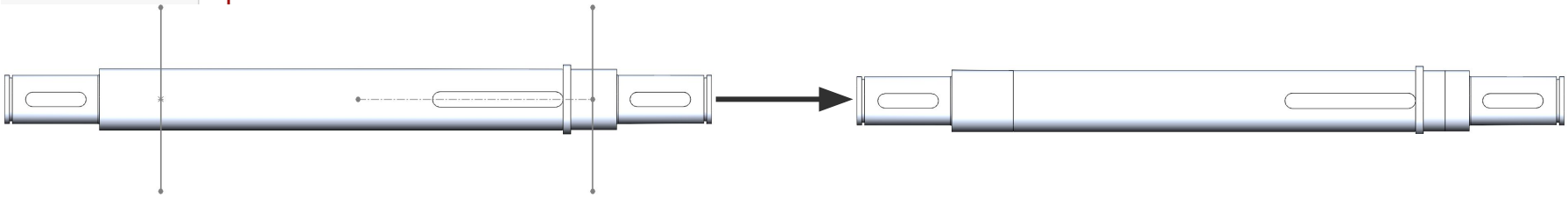

# Applying Bearing Support Fixtures

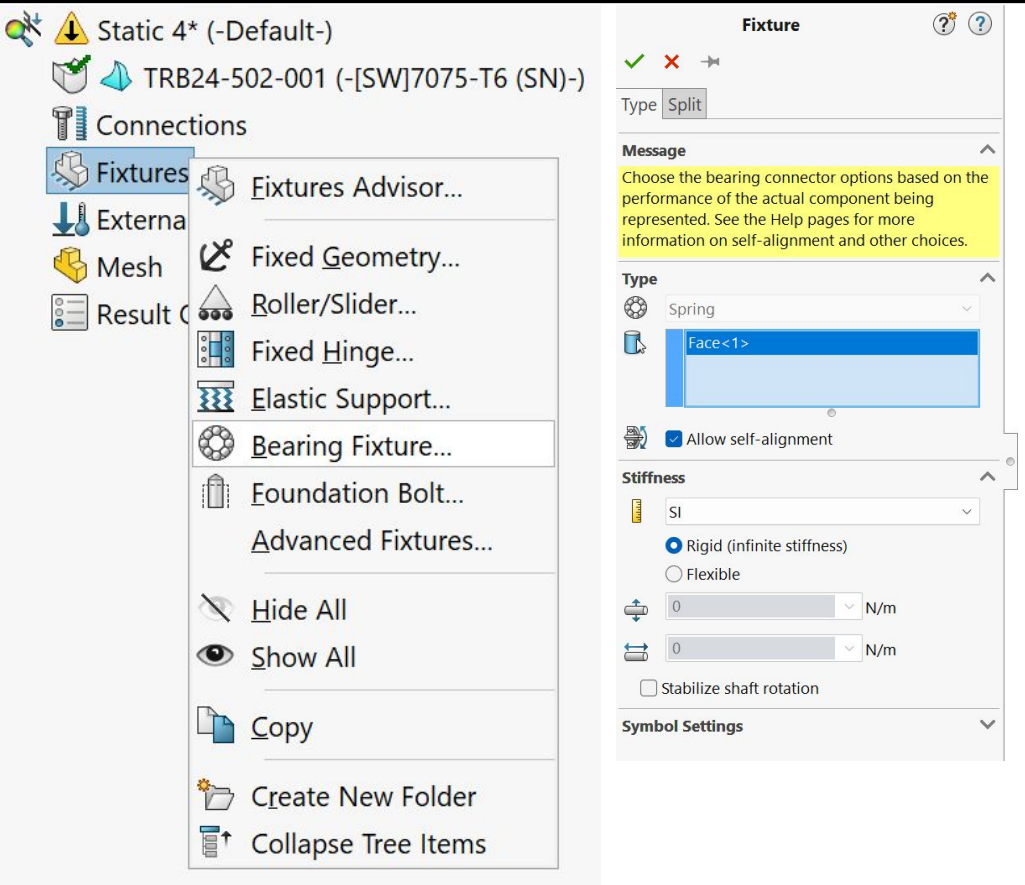


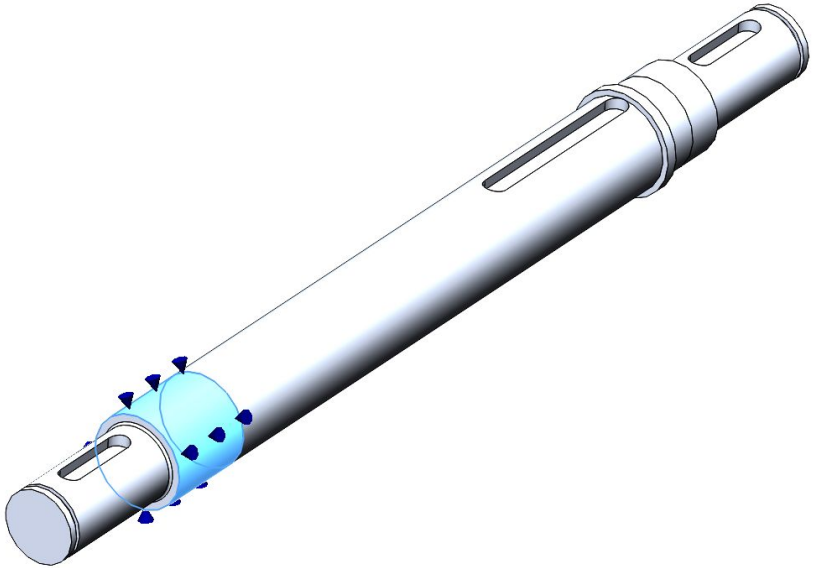

Do this for both bearing supports. This support is used to better model interactions with bearings.

# Apply Roller Fixture at Lip

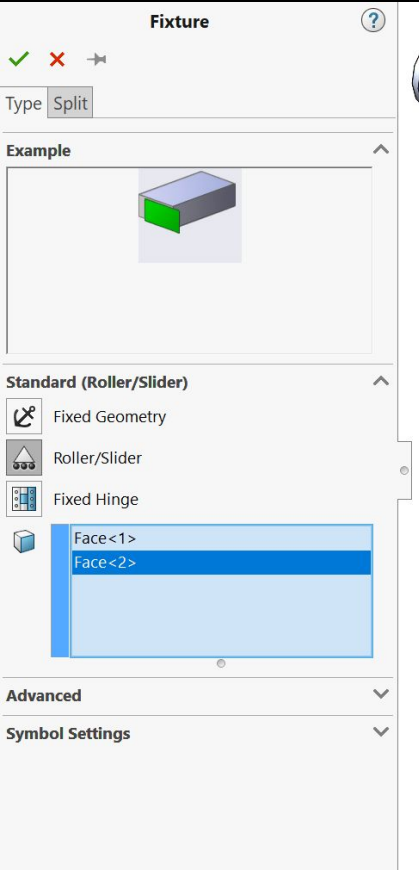


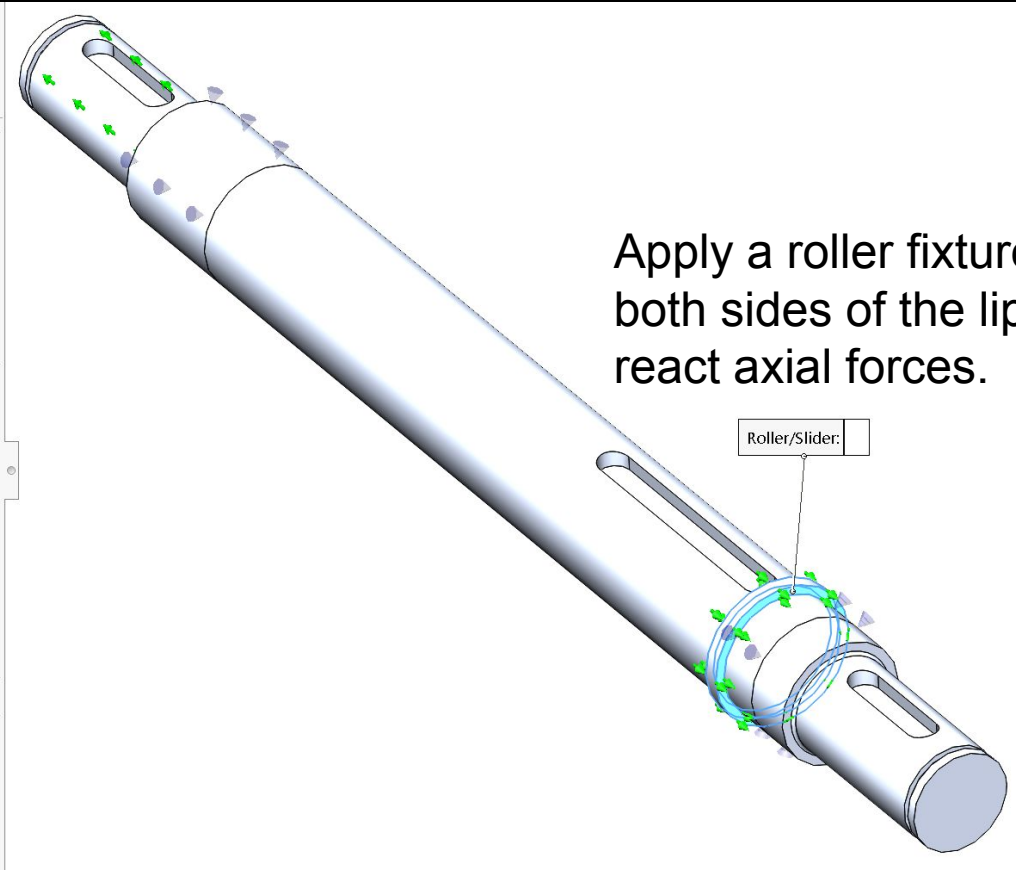


Apply a roller fixture to both sides of the lip to react axial forces.

# Apply “Reaction Torque” at Keyway

We need to apply a reaction torque at the keyway at the right end of the shaft.

There isn’t a good way to model keyways using fixed constraints in FEA.

We are going to ignore the keyway and apply the reaction around the entire shaft for the width of the keyway.

To do this, we need another split line.

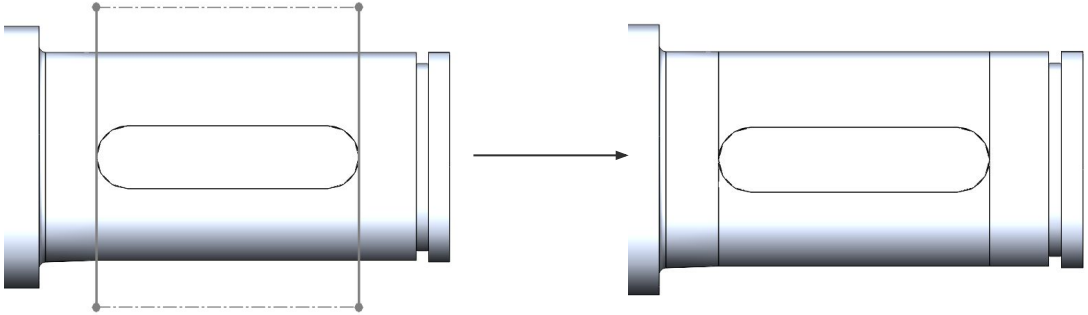

# Apply “Reaction Torque” at Keyway

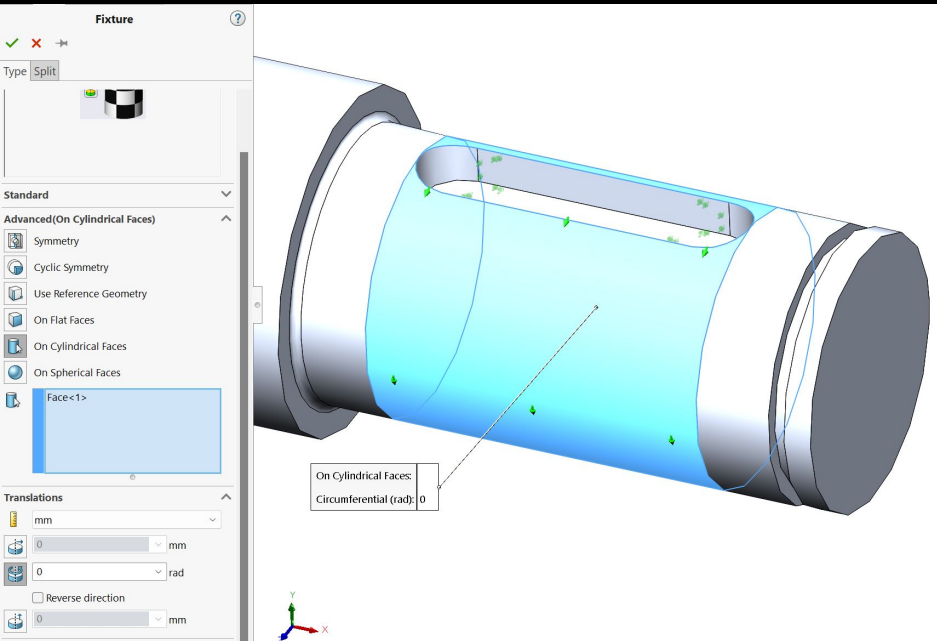


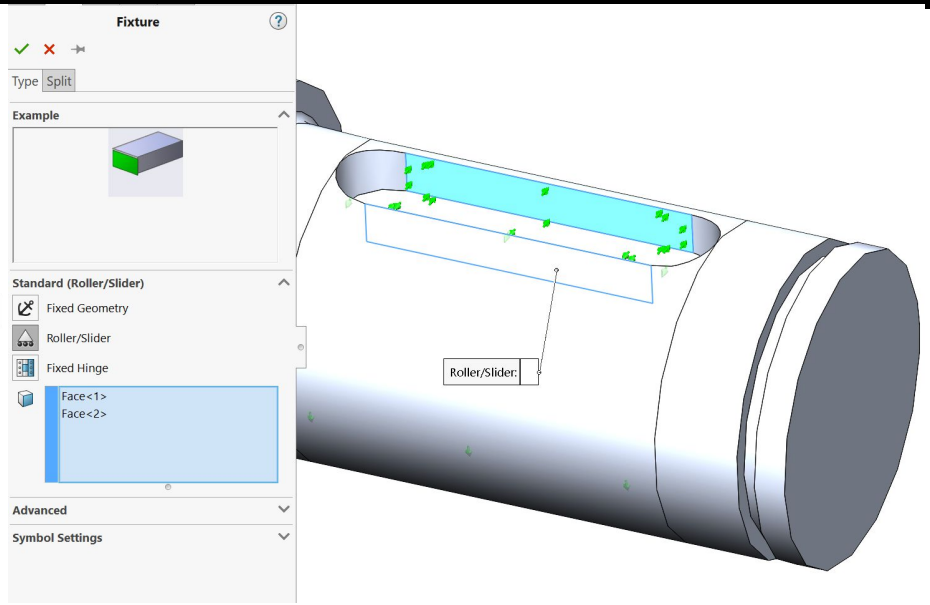


Apply a circumferential advanced fixture to the cylindrical part
Apply a roller fixture to the vertical walls of the keyway

# Step 4: Loads

We need to apply the 63.84 and 638.7 lb belt forces to the middle keyway.

To do this, we'll represent the belt forces as remote loads to capture the applied force and moment.

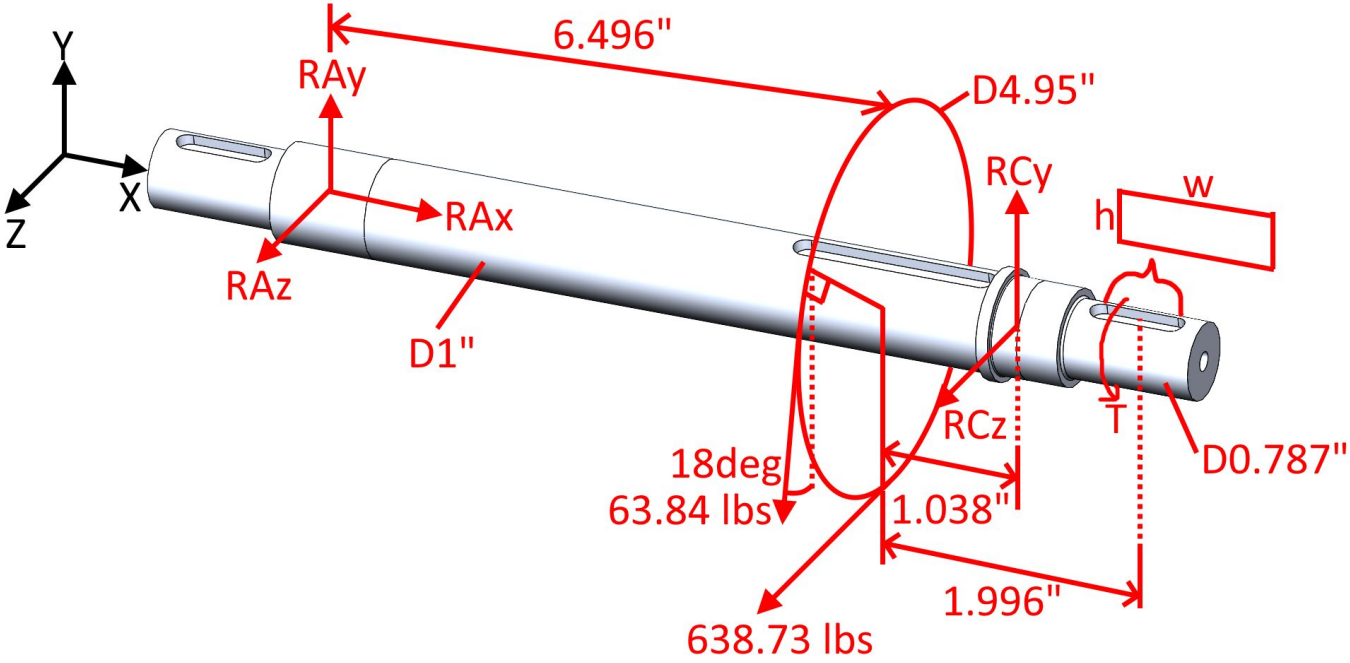

# Remote Loads

First, we need to create a coordinate system where we will know the position and orientation of the force in terms of the coordinate axes.

If point A is the origin, then the remote loads have the following values:

| Force Magnitude | Position x | Position y | Position z | Direction x | Direction y | Direction z |
|---|---|---|---|---|---|---|
| 638.73 | 6.496 | -2.475 | 0 | 0 | 0 | 1 |
| 63.84 | 6.496 | 2.475* sin(18°) | 2.475* cos(18°) | 0 | -cos(18°) | sin(18°) |

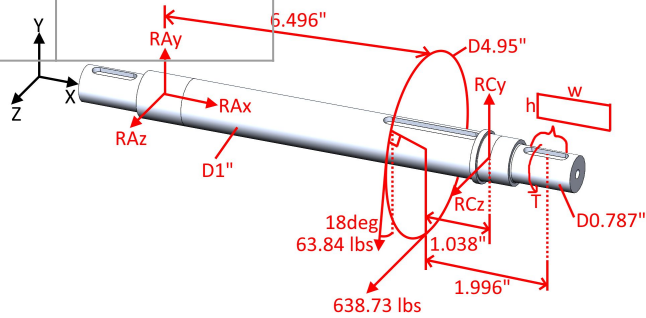

# Applying Remote Loads

Because we are ignoring the keyway geometry, we need to apply the load to the entire shaft section near the middle keyway. To isolate this part of the face, we need another Split Line feature:

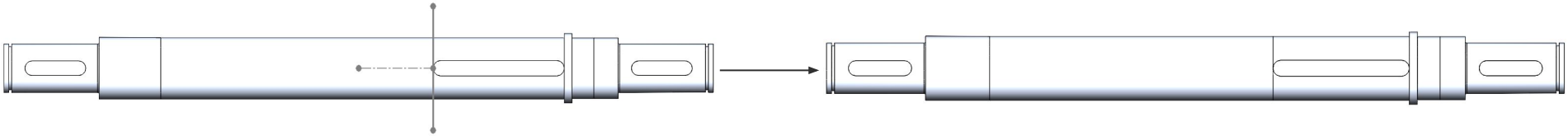

And create a coordinate system to match what we used in the previous slide:

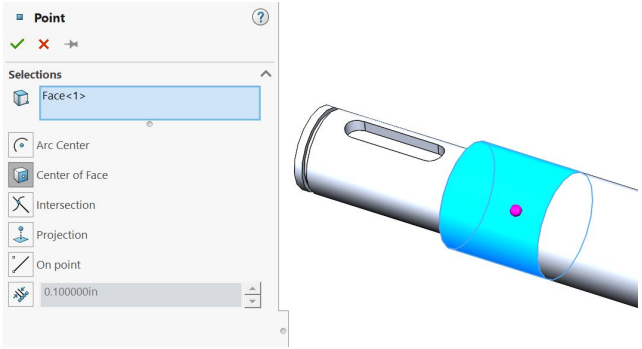


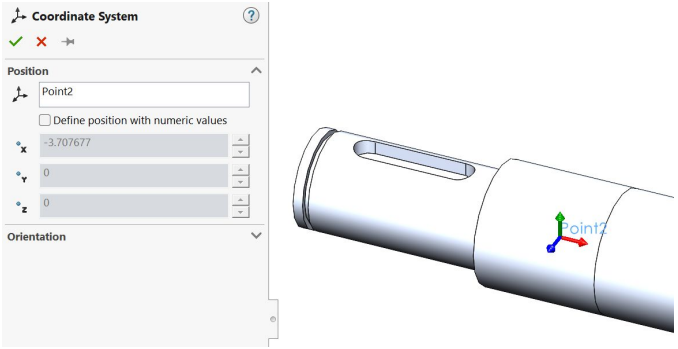

# Applying Bottom Belt Force

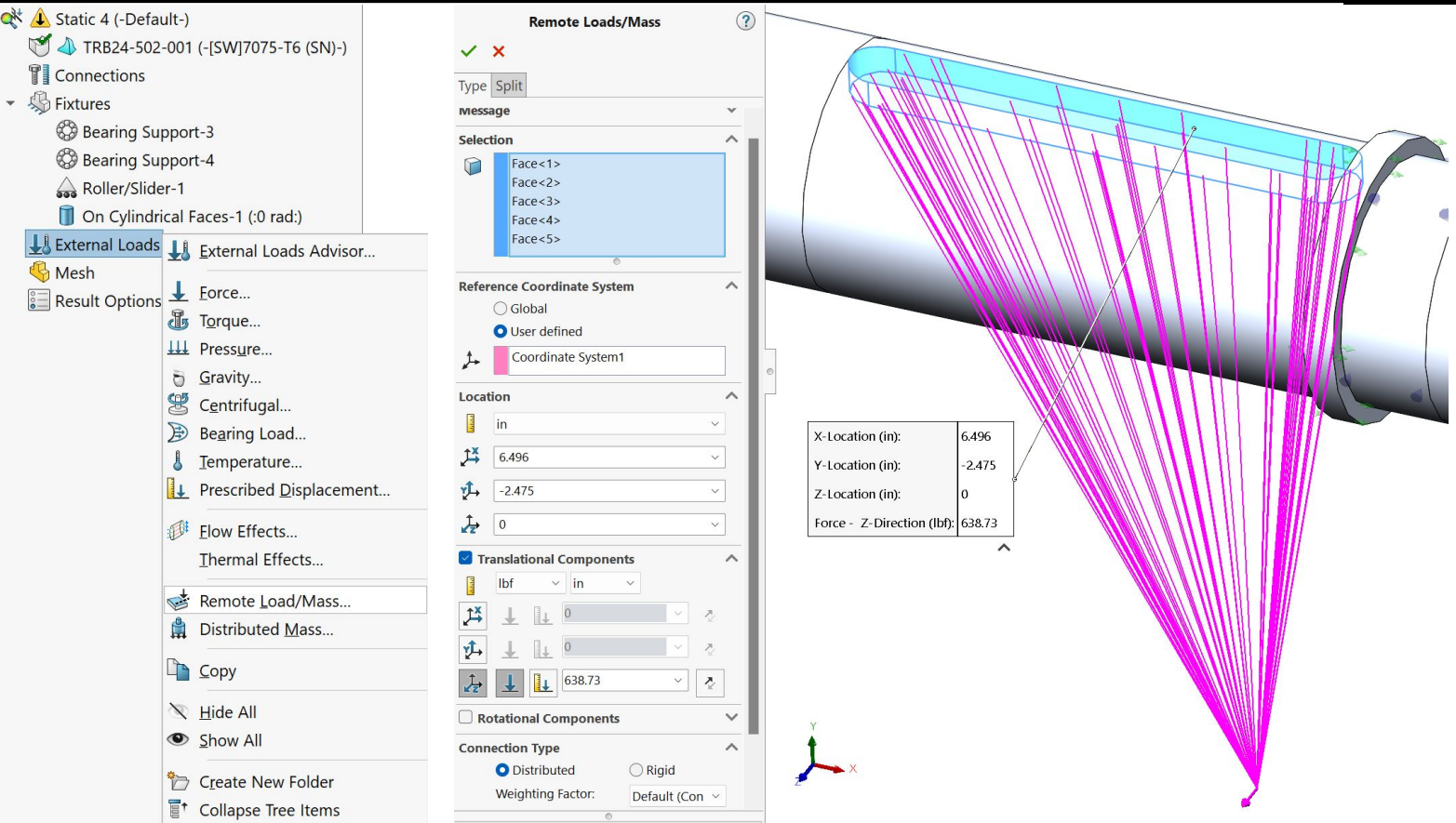

# Applying Top Belt Force

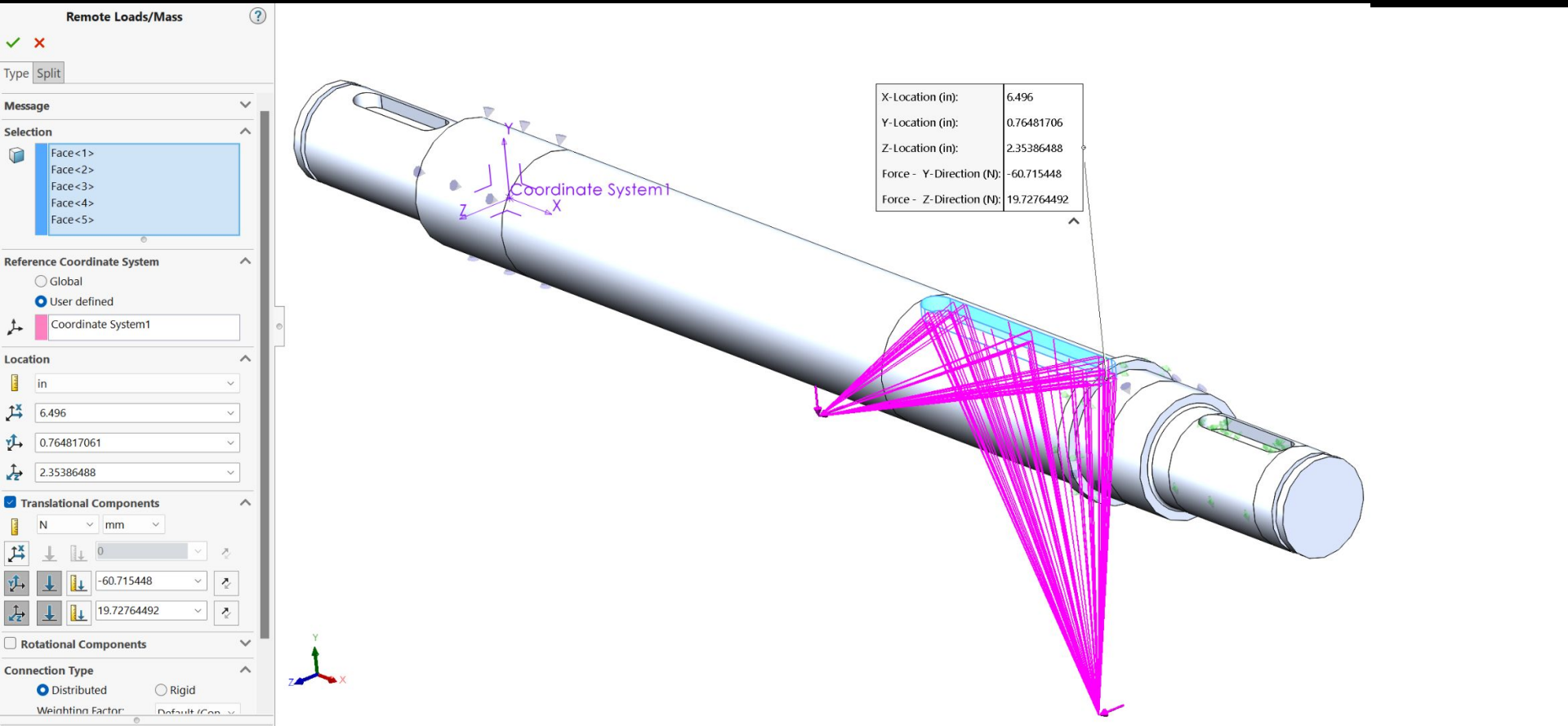

# Step 5: Meshing

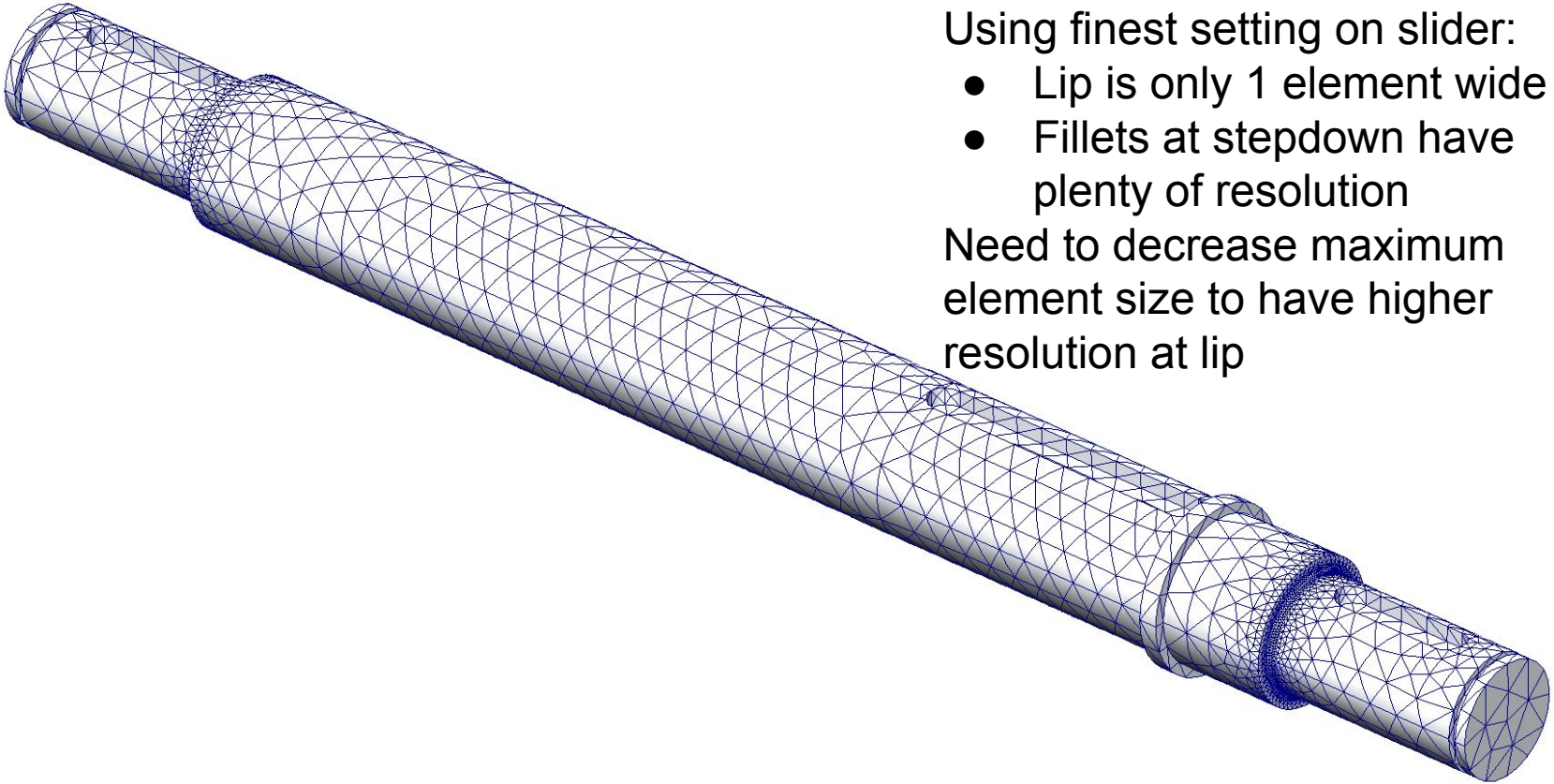

Using finest setting on slider:

- Lip is only 1 element wide
- Fillets at stepdown have plenty of resolution

Need to decrease maximum element size to have higher resolution at lip

# Increasing Mesh Detail Beyond Slider

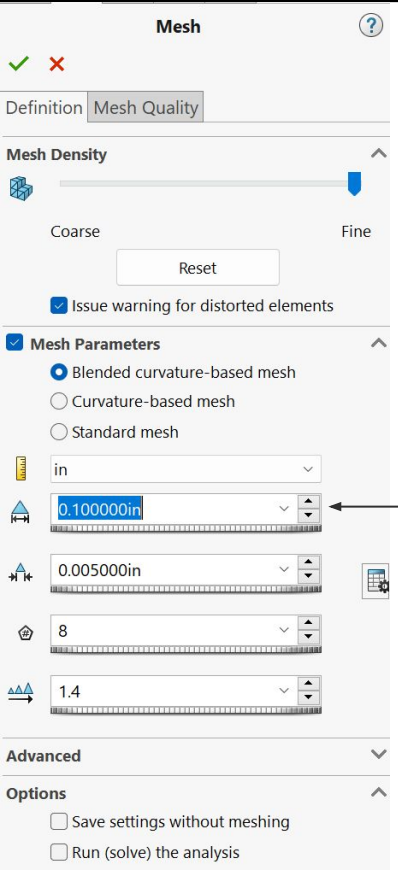


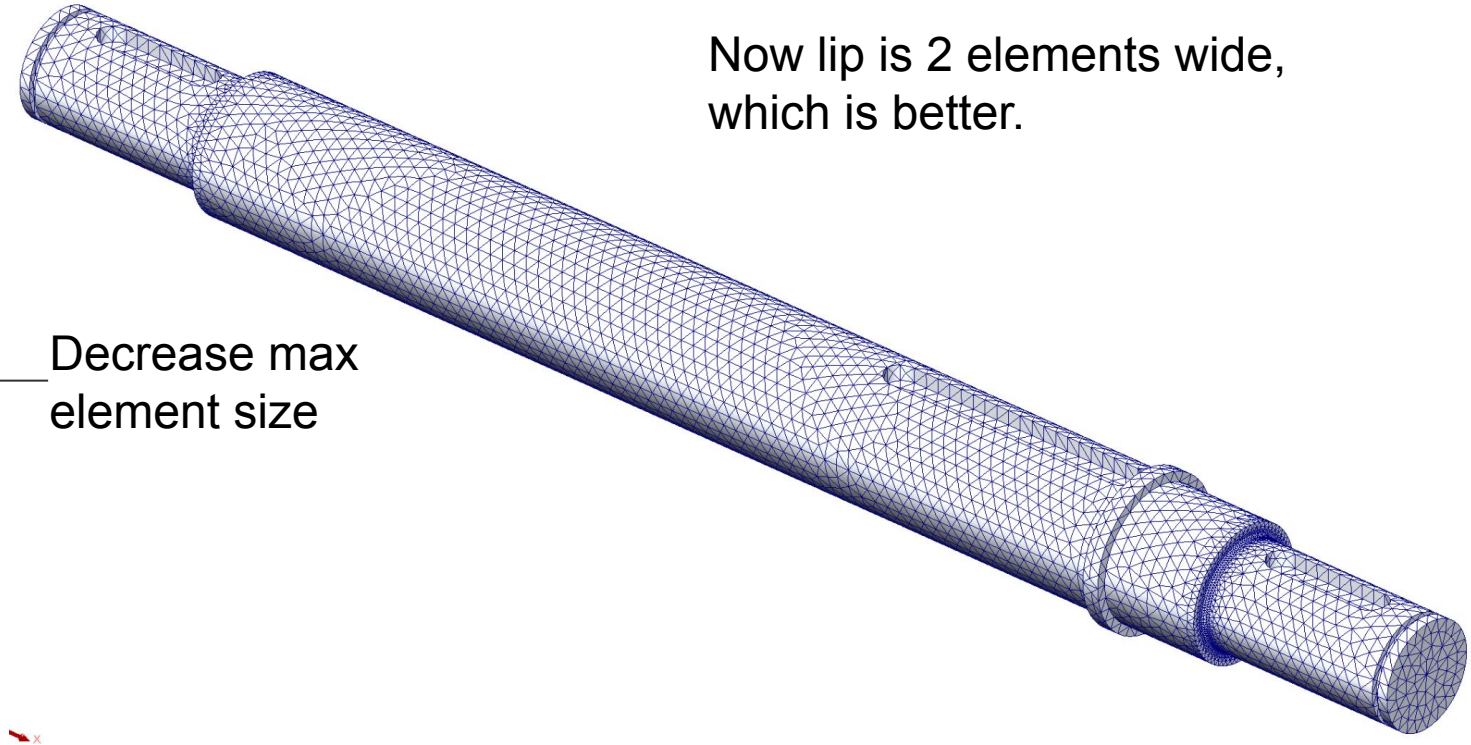

Now lip is 2 elements wide, which is better.

Decrease max element size

# Step 6: Analysis

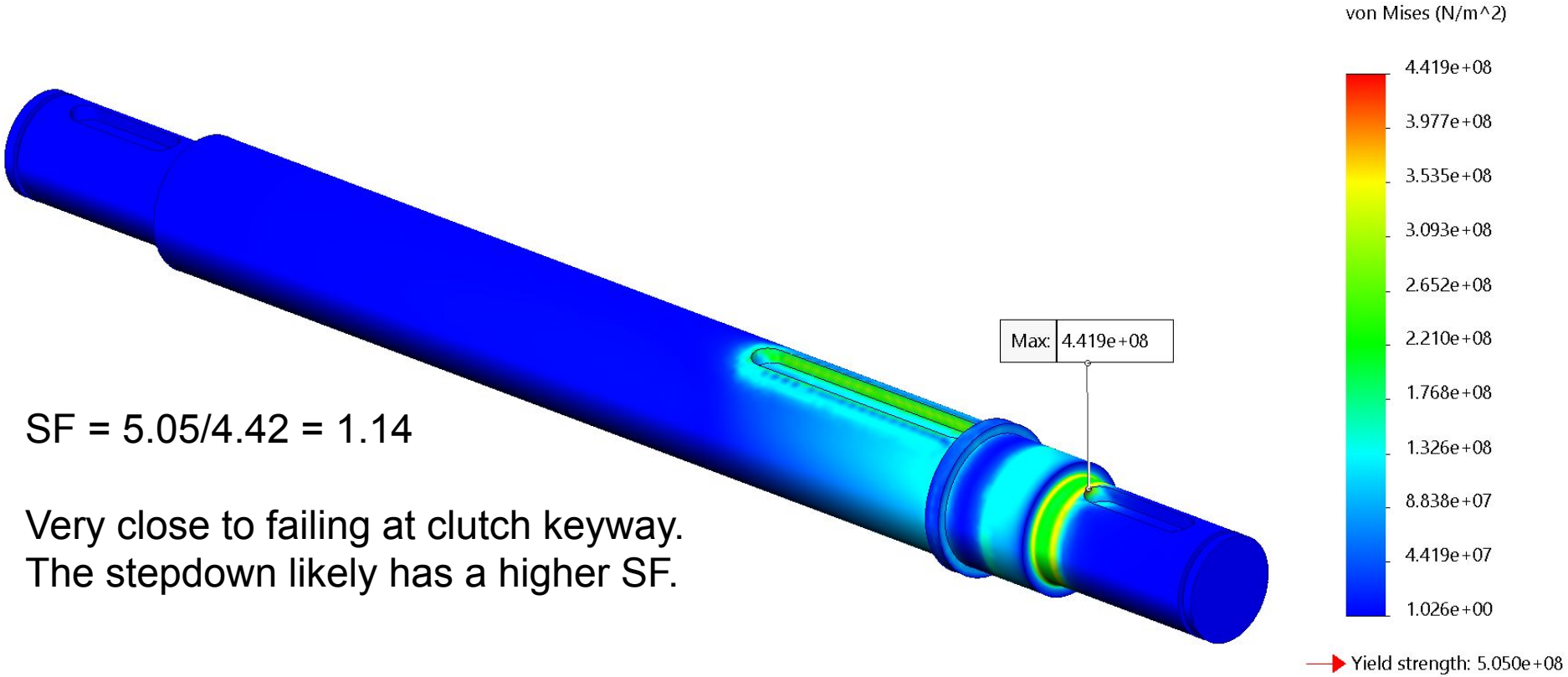


SF = 5.05/4.42 = 1.14

Very close to failing at clutch keyway.
The stepdown likely has a higher SF.

# Using ISO Clipping for Stepdown SF

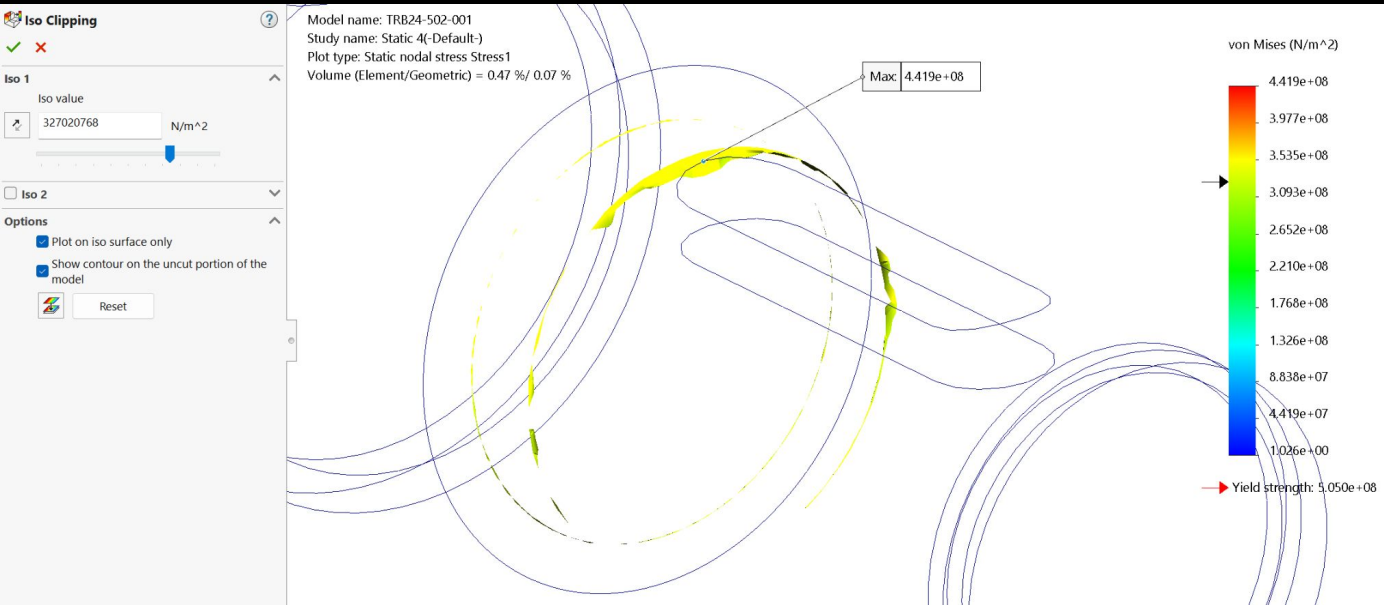


Clipping until step elements are barely visible:

Cutoff is 327 MPa

SF=505/327=1.54

# Disclaimer about Shaft Modeling

FEA is not the best tool for analyzing loads on keyways.

Due to the strange way keyways react torques, finite elements struggle to accurately model them.

Because shafts are simple enough to analyze by hand, hand calculations are often a better analysis tool than FEA for shafts.

See the TR24 front shaft project for more information on how to analyze shafts, or take ENME400!

# Assembly FEA Example: Belt Tensioner

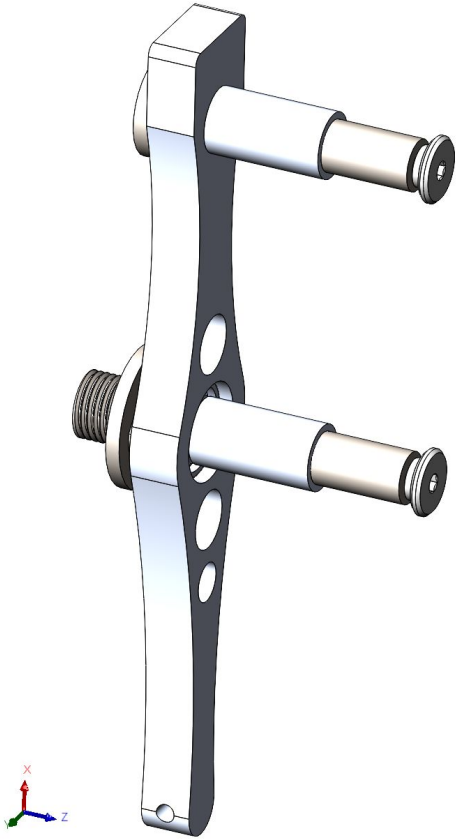

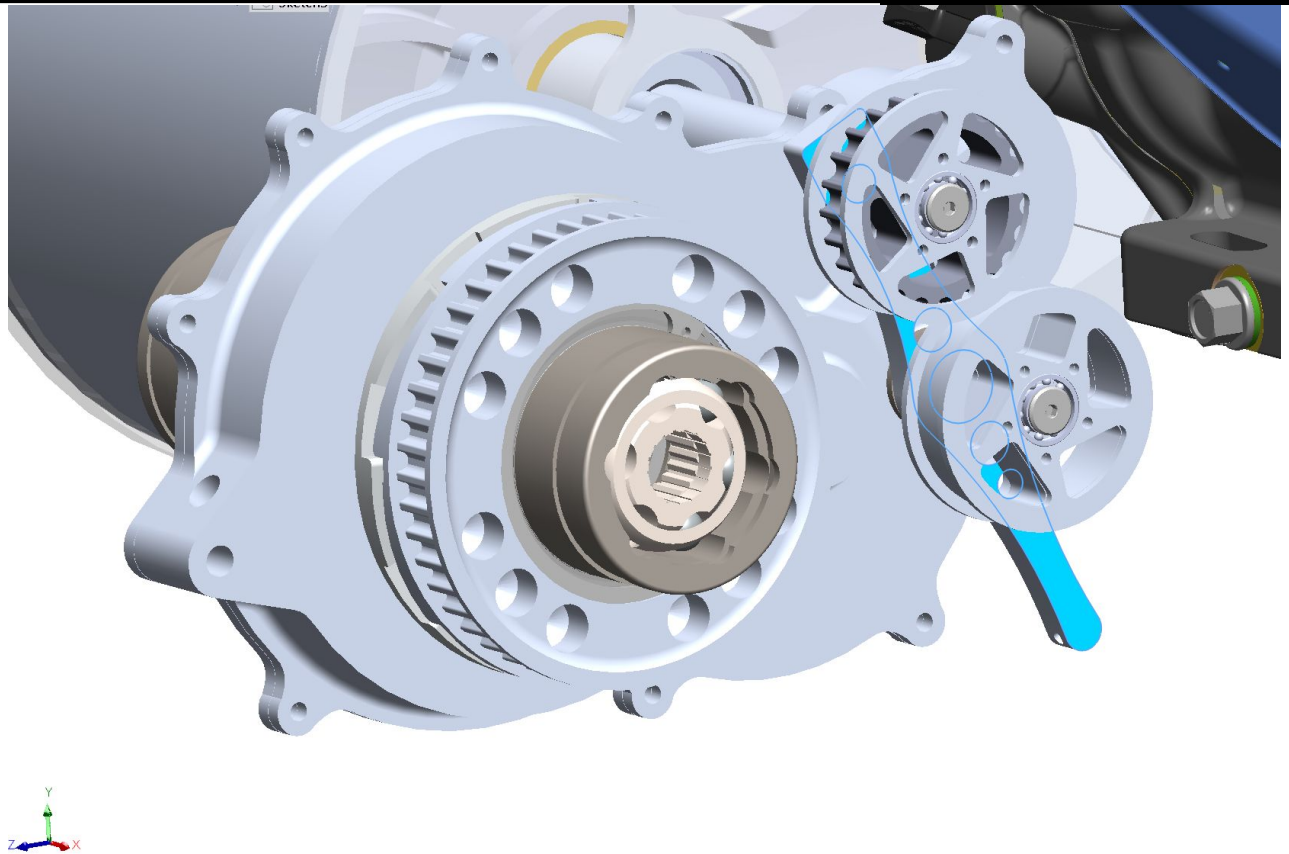

# Step 1: Model

| № | Pulley Name | X Coord [in] | Y Coord [in] | Side | Type | Diameter | Units | Moveable? | Diameter (OD) [in] | Ratio | Wrap Angle [rad] | Teeth | Arc Length [in] | Span Length [in] |
|---|---|---|---|---|---|---|---|---|---|---|---|---|---|---|
| 1 | Drive | -1.43 | -0.23 | Inside | Grooves | 48 | Teeth | Fixed | 4.75 | 1.00 | 170 rad | 0.40 | 7.15 | 59.42 |
| 2 | Driven | 58.00 | -0.13 | Inside | Grooves | 50 | Teeth | Fixed | 4.95 | 1.04 | 252 rad | 0.61 | 11.04 | 1.56 |
| 3 | Idler 2 | 54.00 | -0.50 | Outside Flat | OD | 2.25 | in | Fixed | 2.25 | 0.50 | -72 rad | 0.00 | 1.51 | 50.50 |
| 4 | Idler 1 | 3.50 | -0.50 | Outside Flat | OD | 2.25 | in | Fixed | 2.25 | 0.50 | -131 rad | 0.00 | 2.73 | 0.99 |
| 5 | Tensioner | 2.42 | 1.75 | Inside | Grooves | 22 | Teeth | Pivoted | 2.14 | 0.46 | 141 rad | 0.15 | 2.71 | 4.12 |

Condition Name: 1

| Name | Dir | RPM | Type | Load | Units | DR | SF | Teeth | Diameter (OD) [in] | Shaft load [lbf] | Shaft Load Direction [rad] | Span Tension [lbf] | Tension Ratio | Fatigue Rate | Weighted FR |
|---|---|---|---|---|---|---|---|---|---|---|---|---|---|---|---|
| Drive | CW | 500.00 | Torque Units | 115.2 | lb-ft | ✓ | 1.0 | 48 | 4.75 | 701.38 | 0.02 | 638.37 | 10.00:1 | 53.96% | 53.96% |
| Driven | CW | 480.00 | Torque Units | 120.0 | lb-ft | | 1.0 | 50 | 4.95 | 660.52 | 3.23 | 63.84 | 10.00:1 | 46.03% | 46.03% |
| Idler 2 | CCW | 1008.01 | Torque Units | 0.0 | lb-ft | | 1.0 | N/A | 2.25 | 75.37 | 2.20 | 63.84 | 1.00:1 @ 3.14rad | 0.00% | 0.00% |
| Idler 1 | CCW | 1008.01 | Torque Units | 0.0 | lb-ft | | 1.0 | N/A | 2.25 | 116.18 | 0.43 | 63.84 | 1.00:1 @ 3.14rad | 0.00% | 0.00% |
| Tensioner | CW | 1090.91 | Torque Units | 0.0 | lb-ft | | 1.0 | 22 | 2.14 | 120.23 | 3.65 | 63.84 | 1.00:1 | 0.00% | 0.00% |

Belt drive model in Gates Design Power gives positions, directions, and strengths of forces

# Tensioner FBD

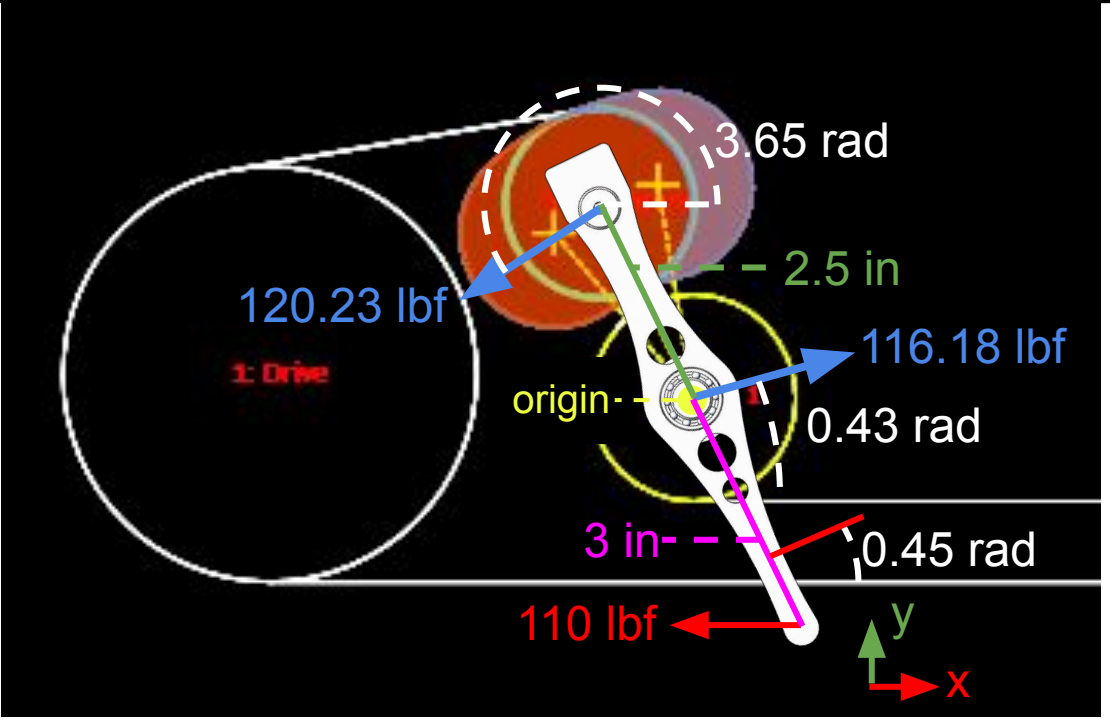


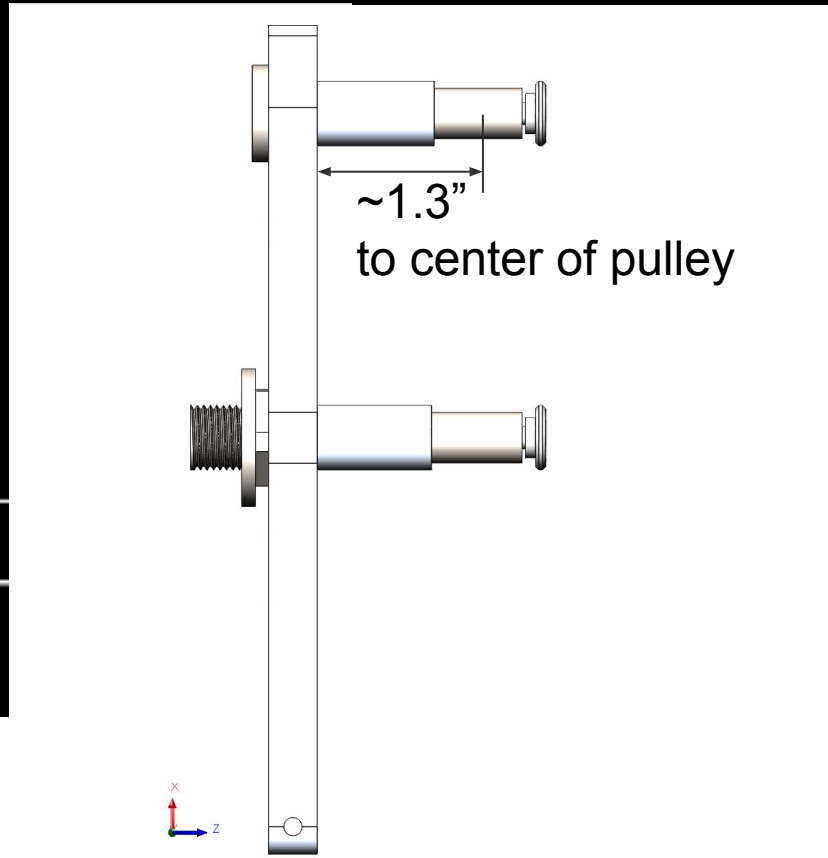

# Tensioner FBD in Local Coordinates

Subtracting tensioner rotation from all angles:
(-0.45 rad)

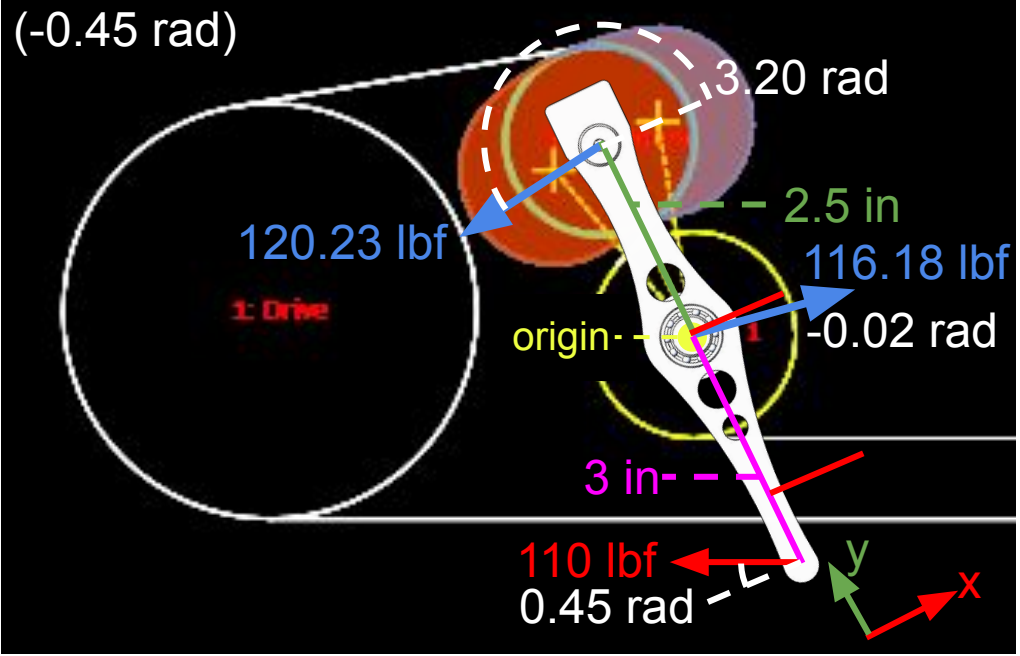


| | 120.23 lbf Force | 116.18 lbf Force | 110 lbf Force |
|---|---|---|---|
| px | 0 | 0 | 0 |
| py | 2.5” | 0 | -3” |
| pz | 1.3” | 1.3” | 1.3” |
| Fx | 120.23 *cos(3.2) | 116.18 *cos(-0.02) | -110 *cos(0.45) |
| Fy | 120.23 *sin(3.2) | 116.18 *sin(-0.02) | 110 *sin(0.45) |
| Fz | 0 | 0 | 0 |

# Step 2: Layout

We want to analyze the forces through the tensioner arm and shafts.

We don’t care about the pulleys or the spacers.

So, we will create a local copy of the assembly which only includes the tensioner arm and shafts.

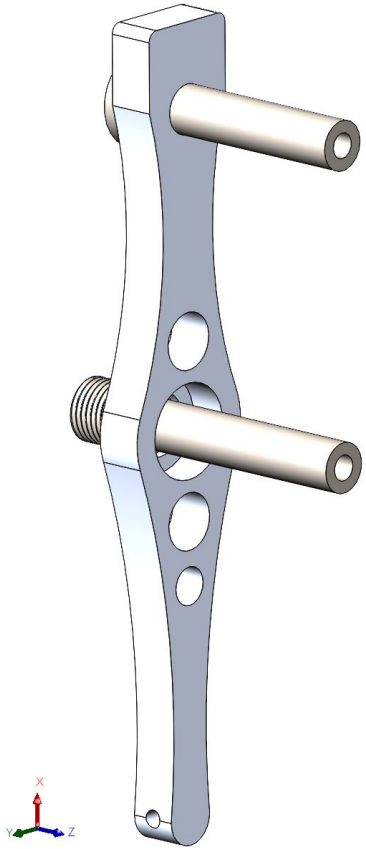

# Recreating FBD Coordinate System

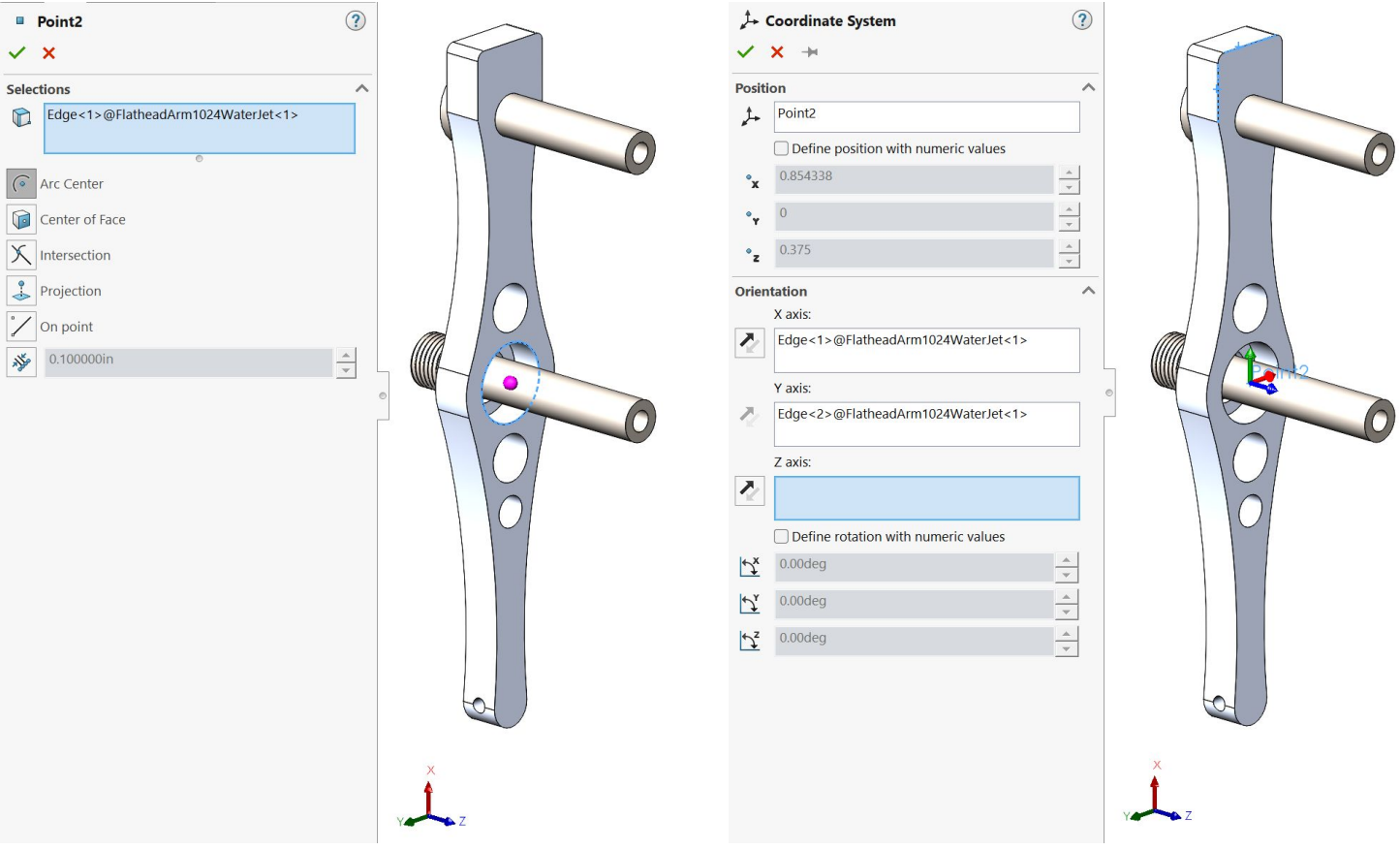

# Create Static Study & Set Interactions

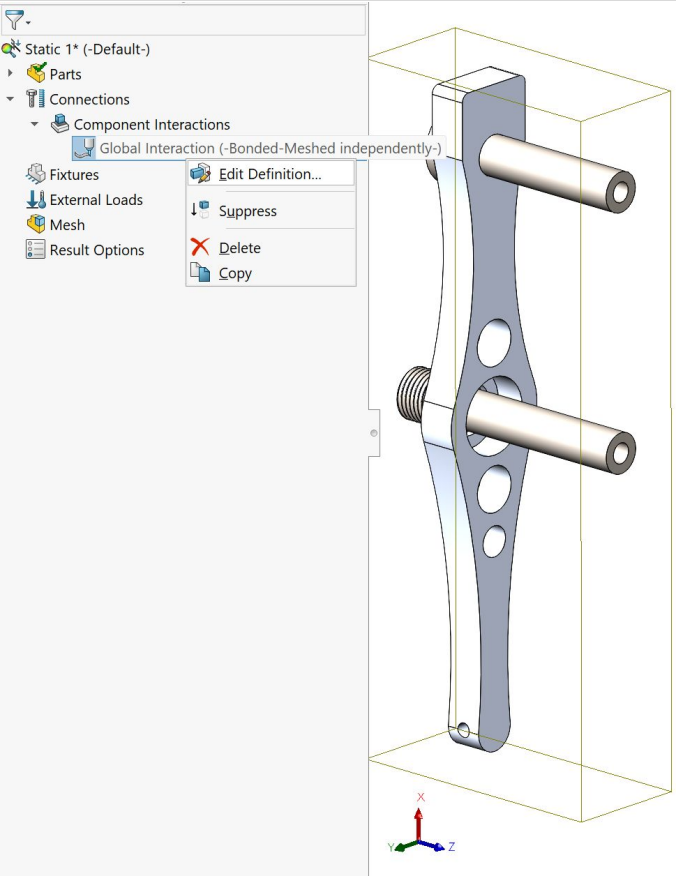


Notice how in assembly FEA there is a “Component Interactions” section.

“Interactions” determine how forces are resolved between touching objects.

By default, all touching items are “bonded”, like they are welded together. For assemblies where parts slide against each other, this is **wrong**.

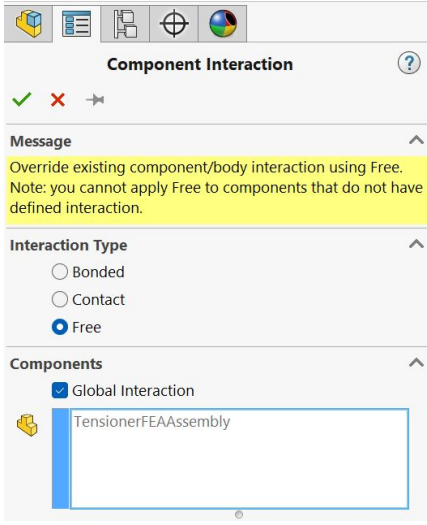


Set to “Free” to manually define interactions.

# Add Split Lines Where Faces Interact

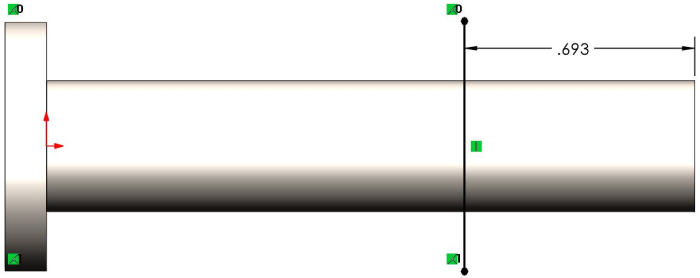


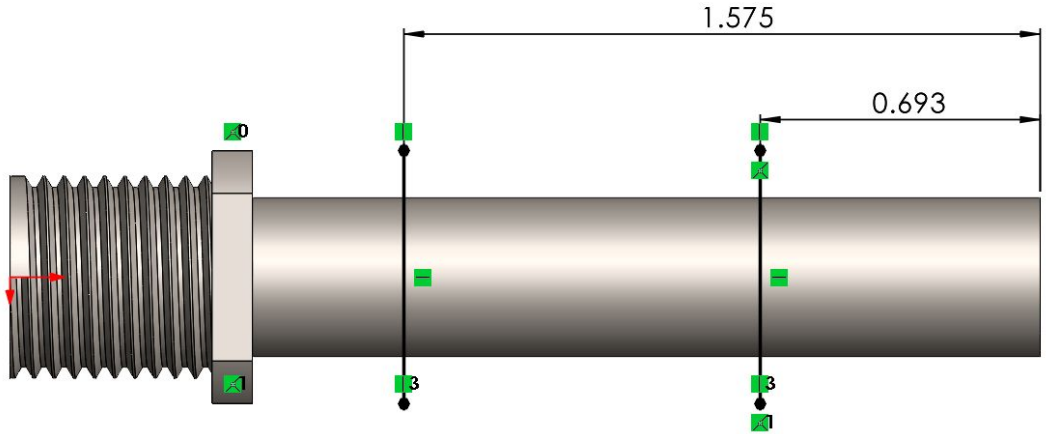


These represent bearing contact surfaces.

Be sure to fix any mate errors in the assembly after splitting the faces!

# Add Bonded Interaction

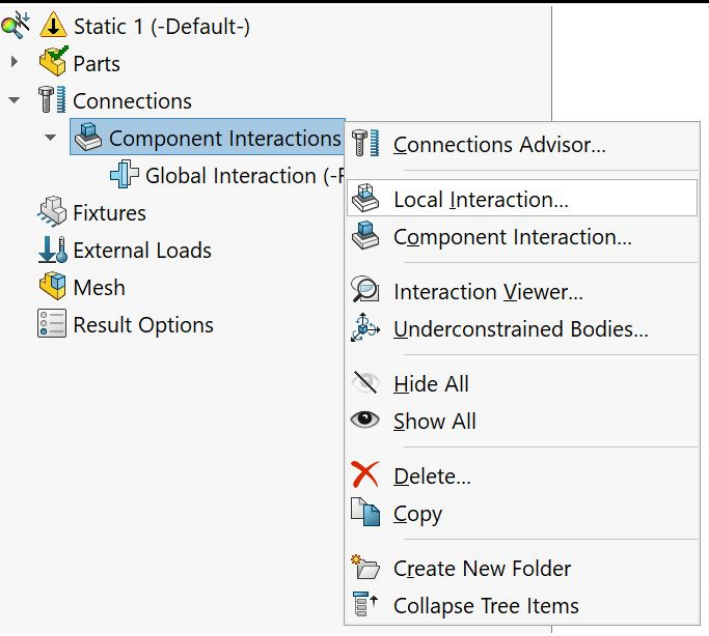


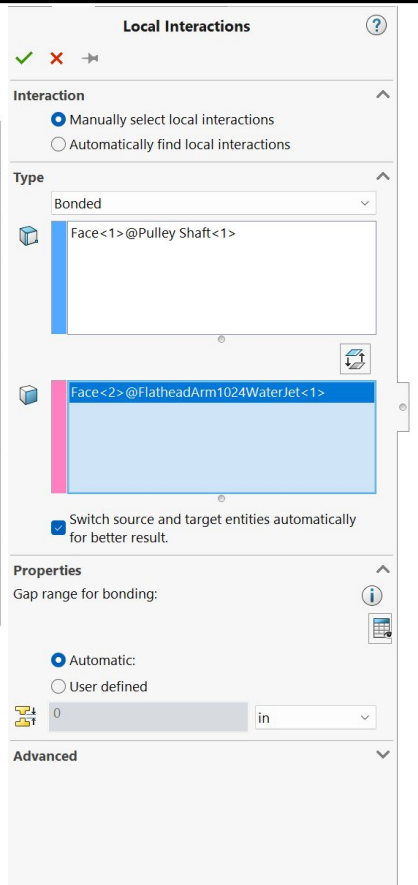


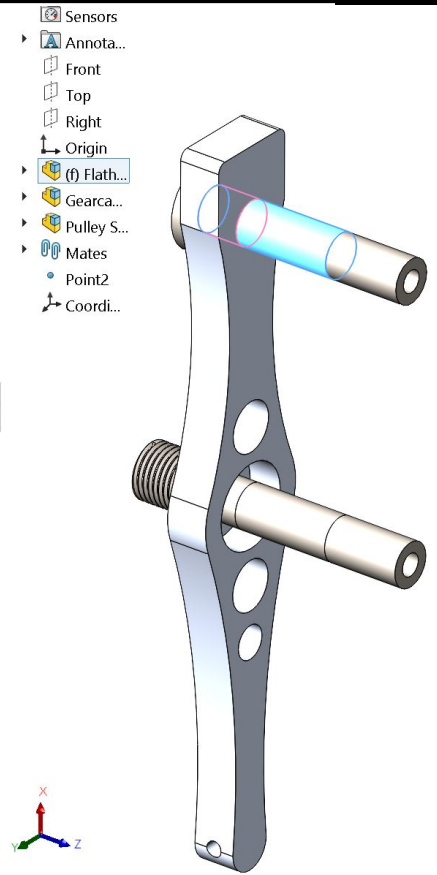


Select the pulley shaft and the hole it inserts into.

You may need to hide parts to do this.

The type is “Bonded” because this is a press-fit.

# Add Contact Interaction

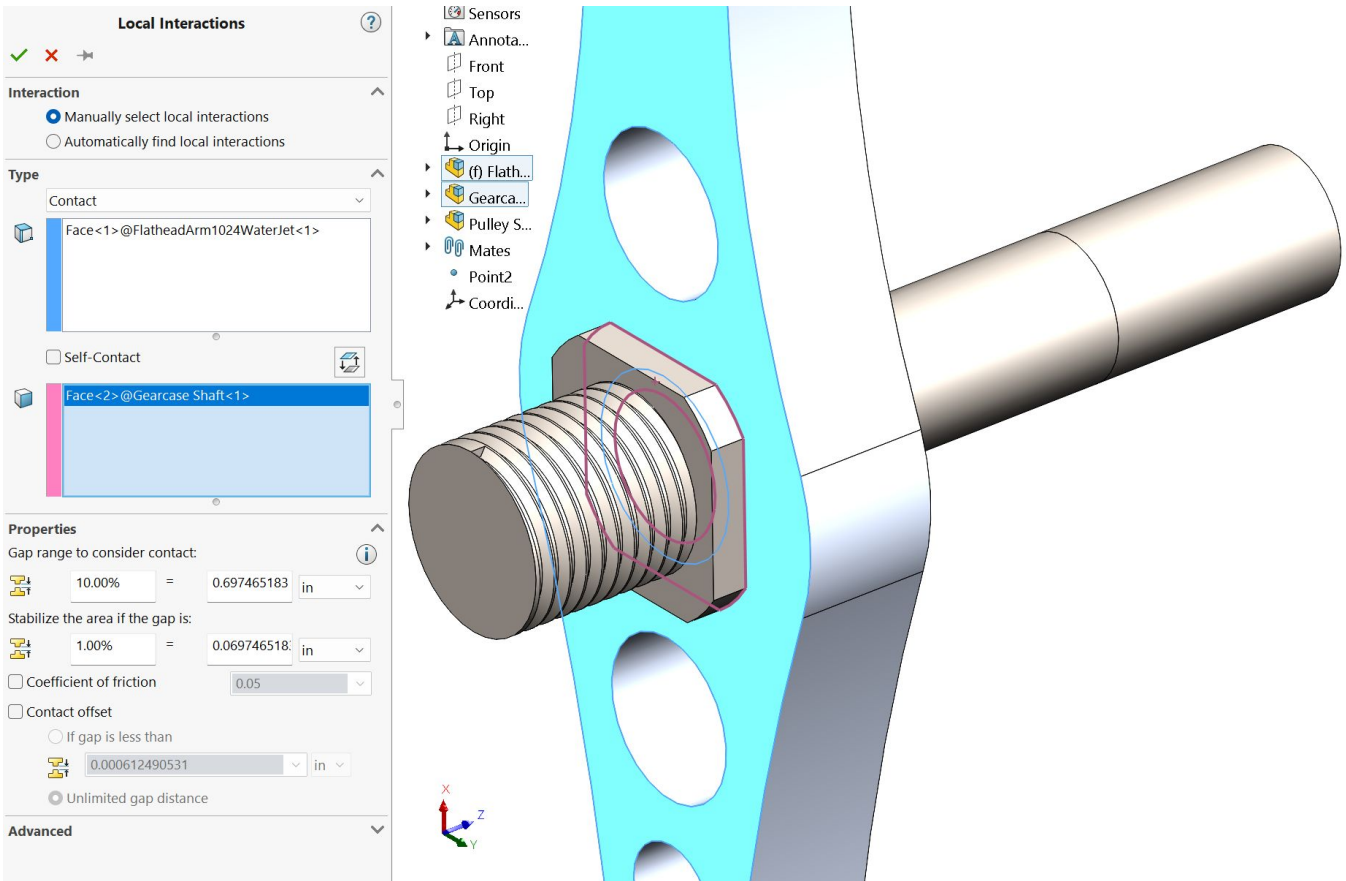


Between the back of the tensioner arm and the lip on the gearcase shaft.

# Add Bearing Connection

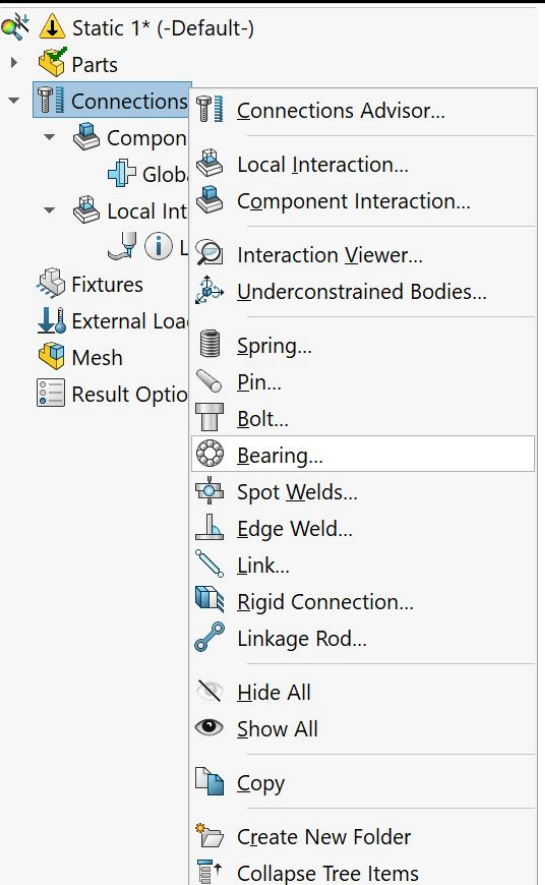


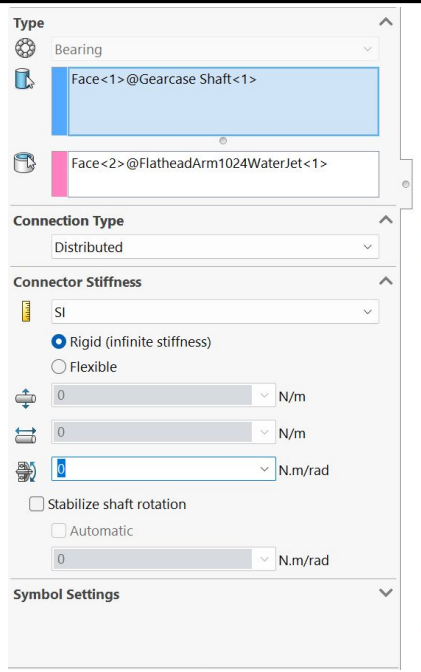


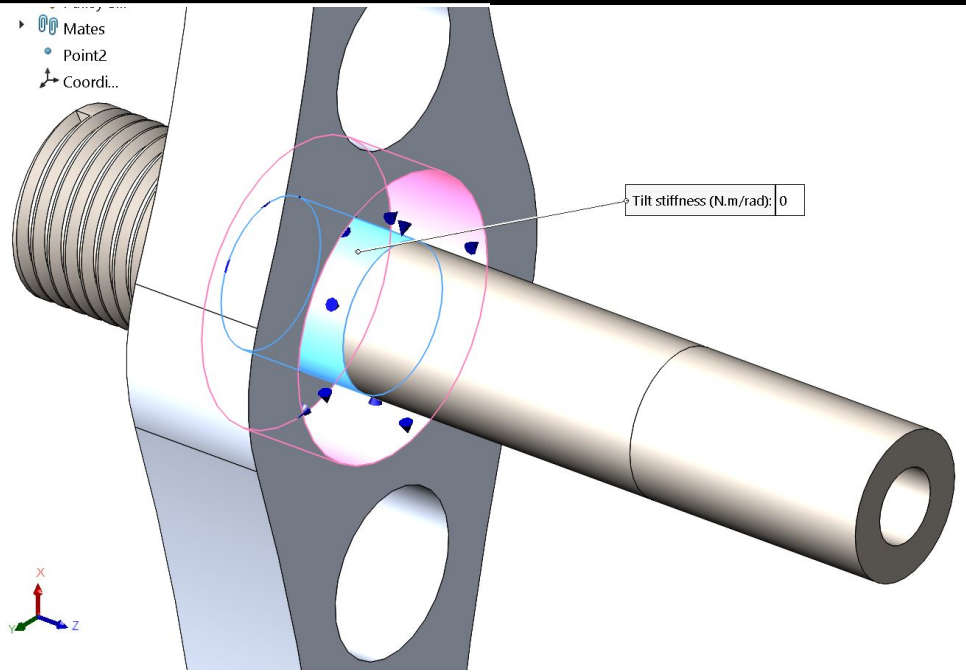


Default options for the bearing connection are fine.

# Verifying Interactions

Use the Interaction Viewer to see applied interactions:

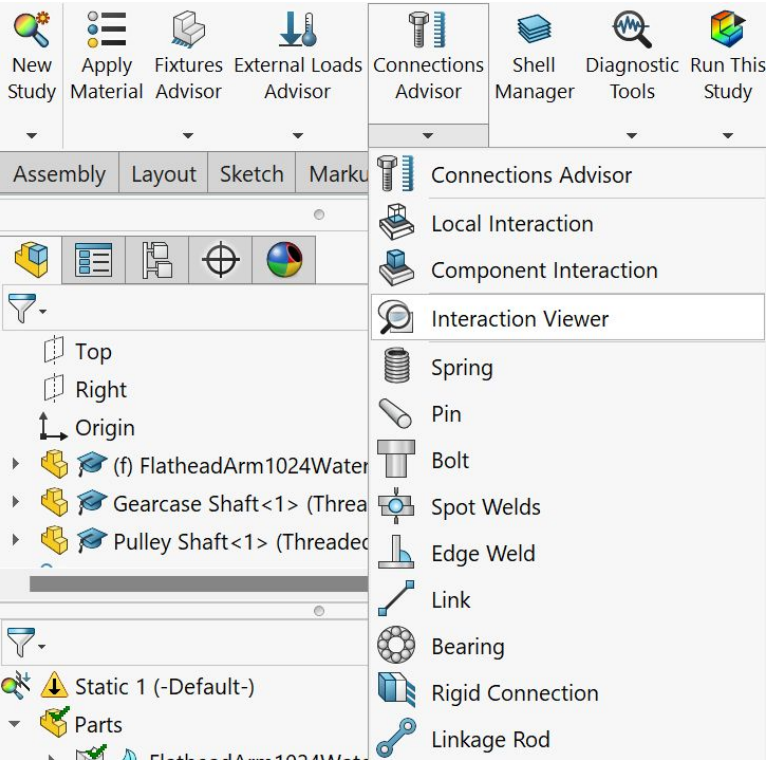


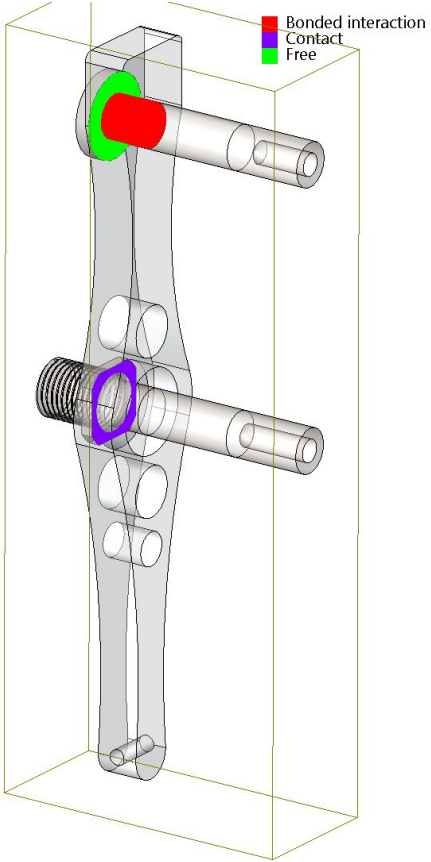

# Step 3: Fixtures

Add fixed geometry constraints to these faces:

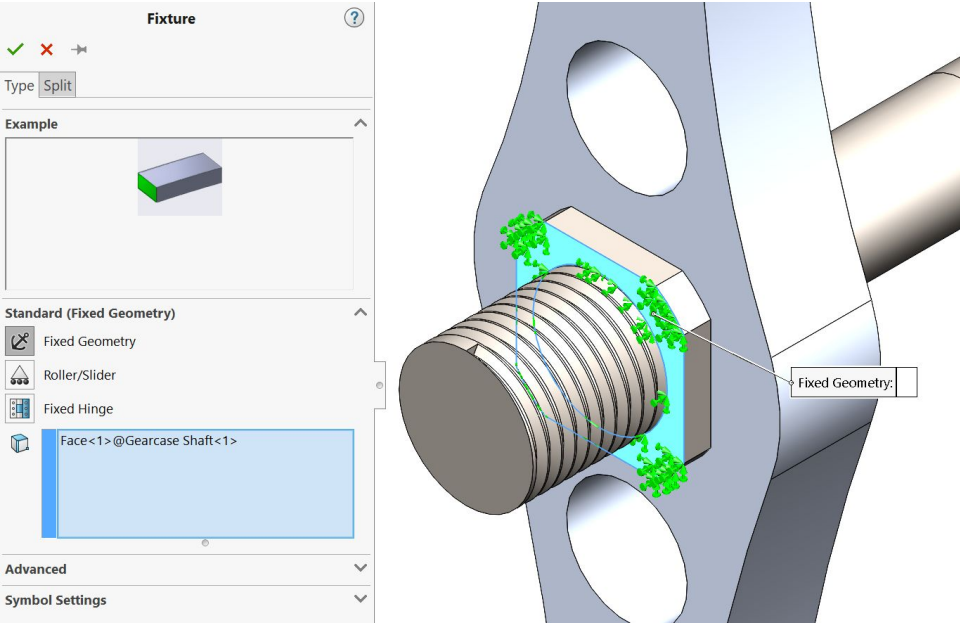


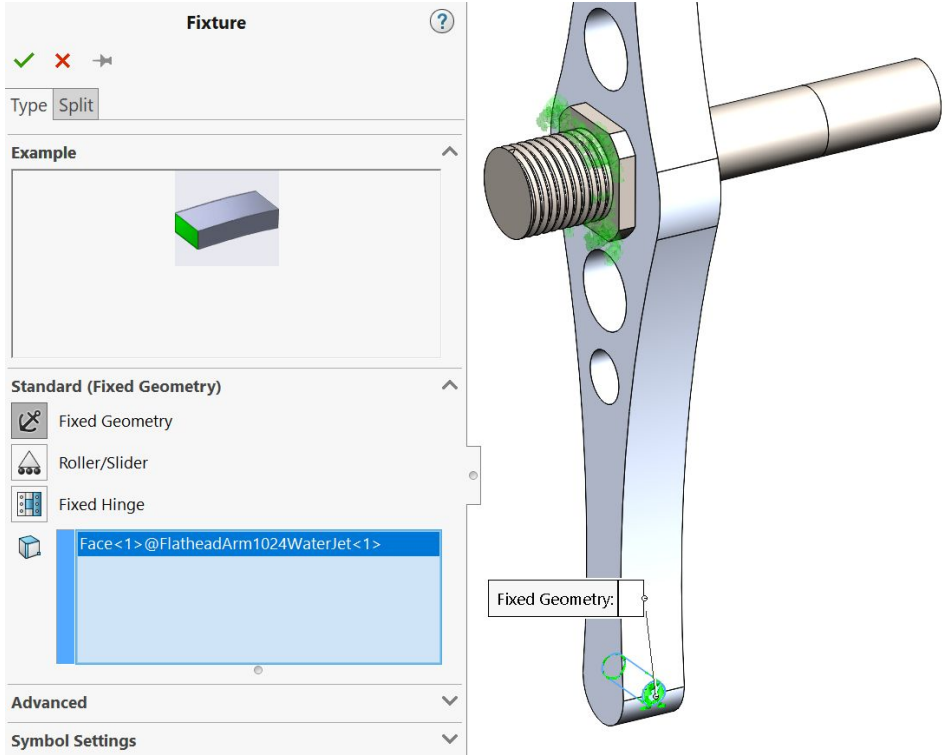


The second fixture will represent the spring reaction.

# Step 4: Loads

As a refresher:

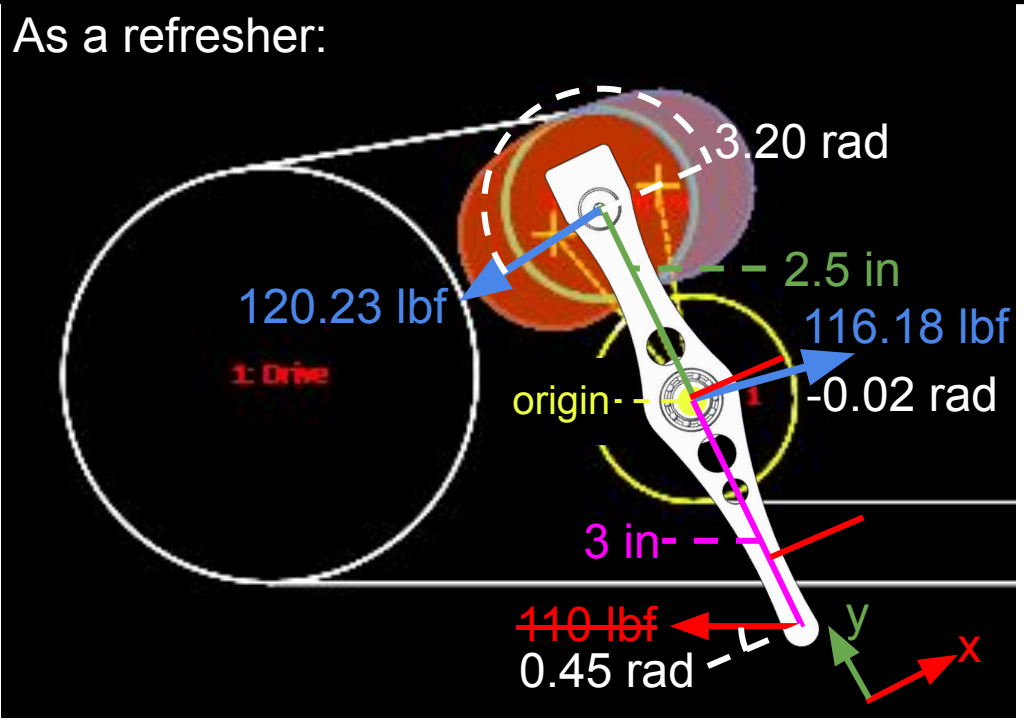


| | 120.23 lbf Force | 116.18 lbf Force | ~~110 lbf Force~~ |
|---|---|---|---|
| px | 0 | 0 | ~~0~~ |
| py | 2.5” | 0 | ~~-3”~~ |
| pz | 1.3” | 1.3” | ~~1.3”~~ |
| Fx | 120.23 *cos(3.2) | 116.18 *cos(-0.02) | ~~-110 *cos(0.45)~~ |
| Fy | 120.23 *sin(3.2) | 116.18 *sin(-0.02) | ~~110 *sin(0.45)~~ |
| Fz | 0 | 0 | ~~0~~ |

Spring force is replaced by fixture to make the FEA solvable.

# Gearcase Shaft Load

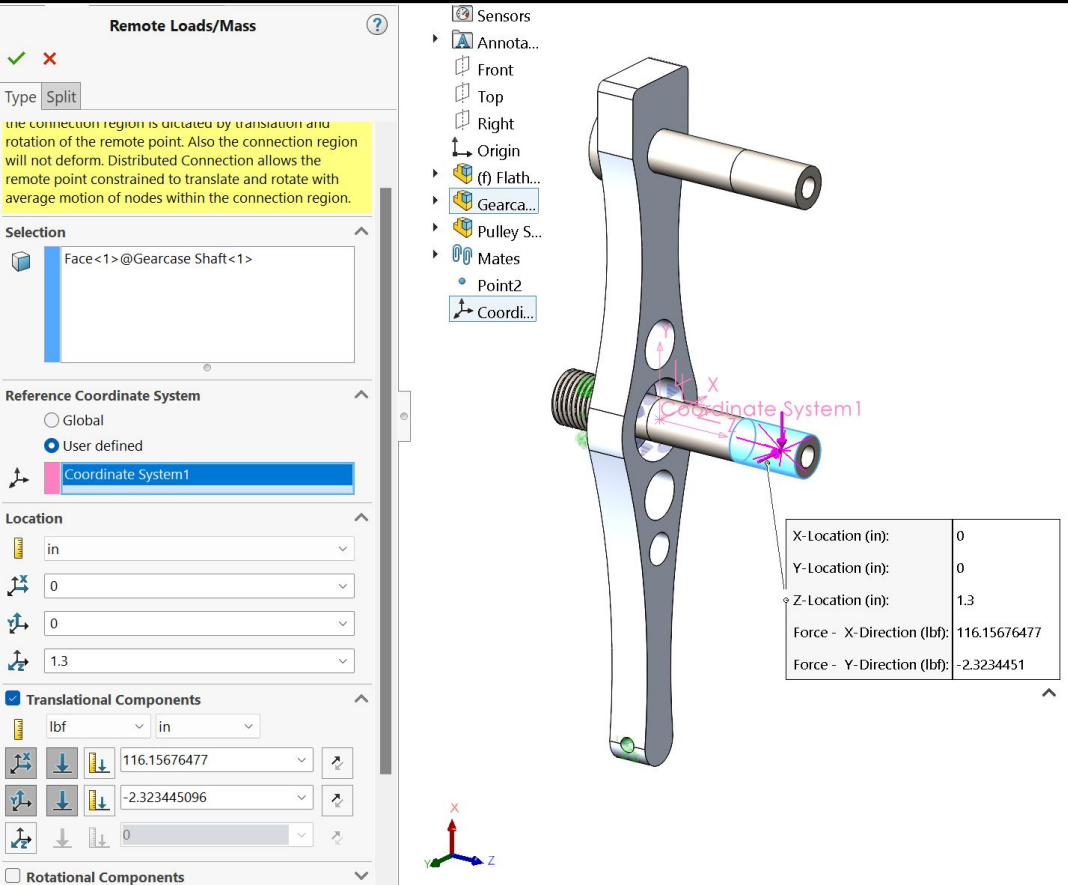


| | 116.18 lbf Force |
|---|---|
| px | 0 |
| py | 0 |
| pz | 1.3” |
| Fx | 116.18 *cos(-0.02) |
| Fy | 116.18 *sin(-0.02) |
| Fz | 0 |

# Pulley Shaft Load

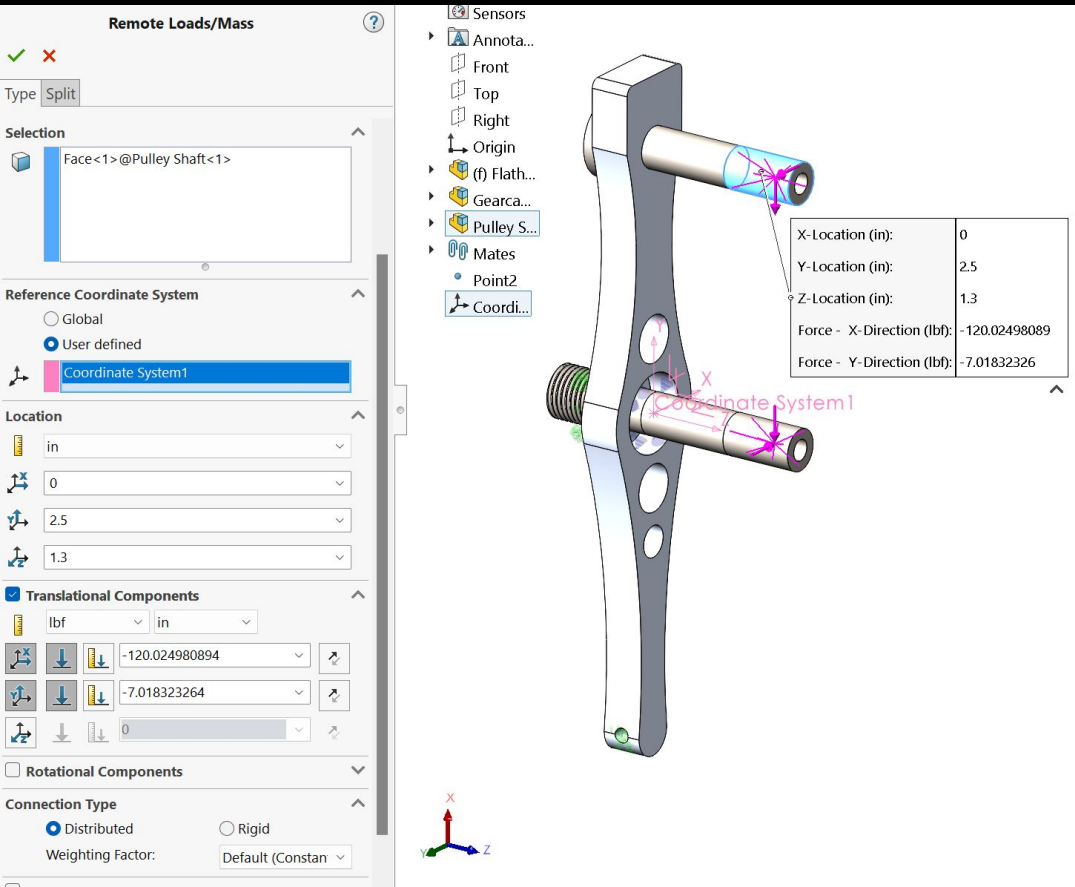


| | 120.23 lbf Force |
|---|---|
| px | 0 |
| py | 2.5” |
| pz | 1.3” |
| Fx | 120.23 *cos(3.2) |
| Fy | 120.23 *sin(3.2) |
| Fz | 0 |

# Step 5: Meshing

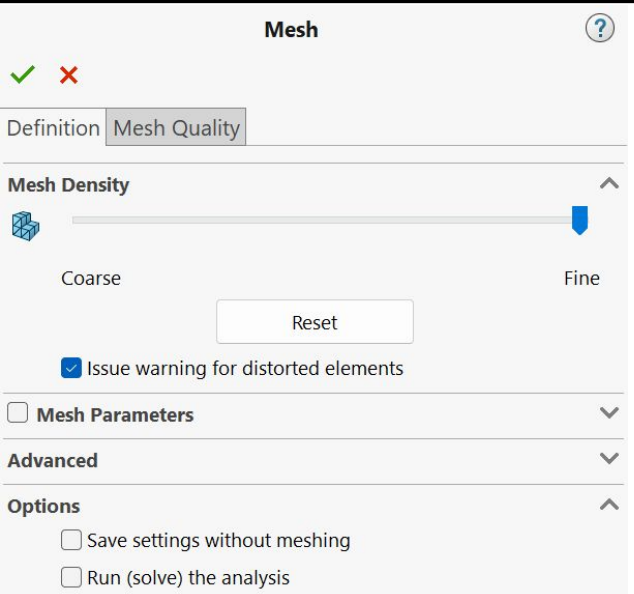


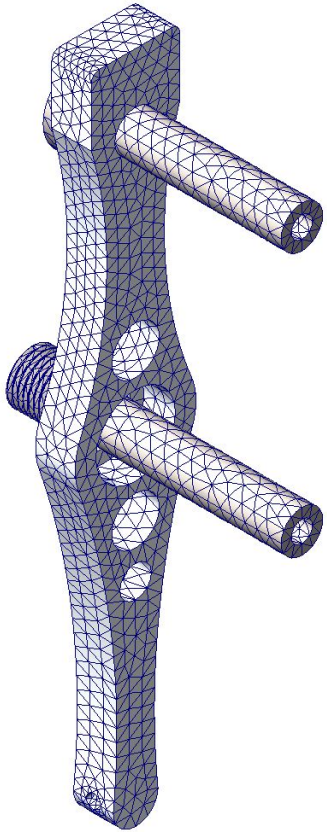

This mesh is good enough.

# Step 6: Analysis

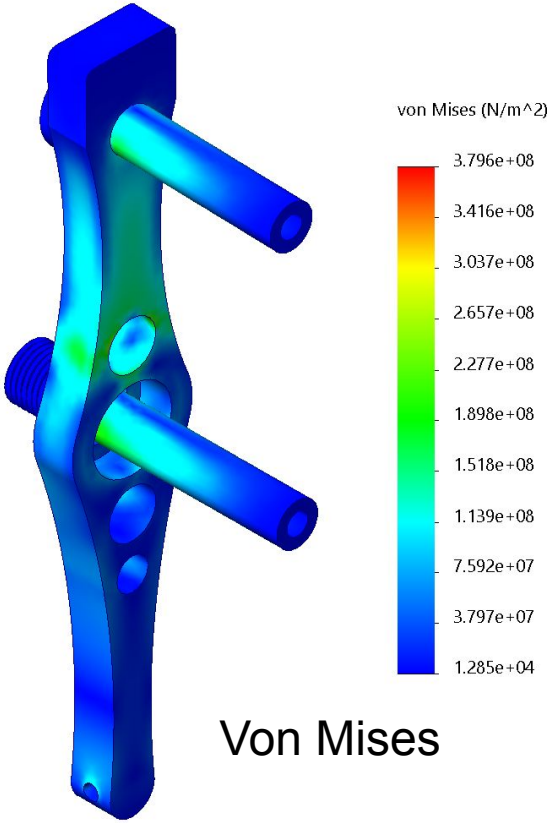


Von Mises

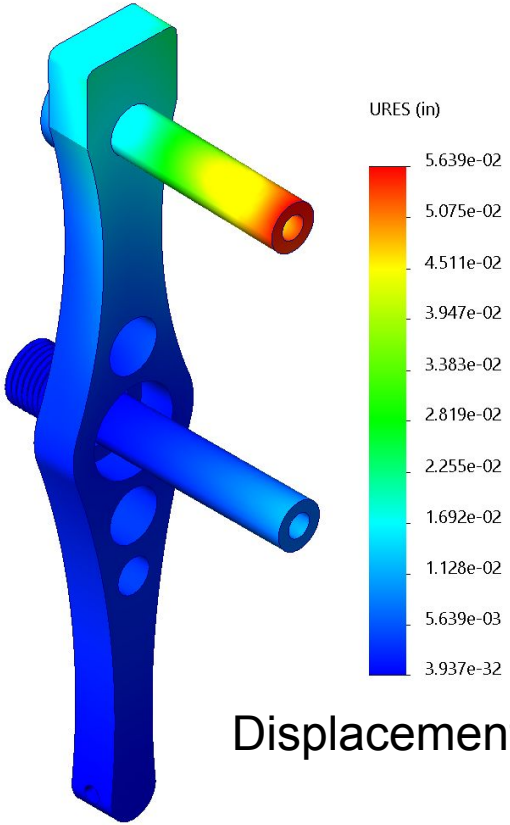


Displacement

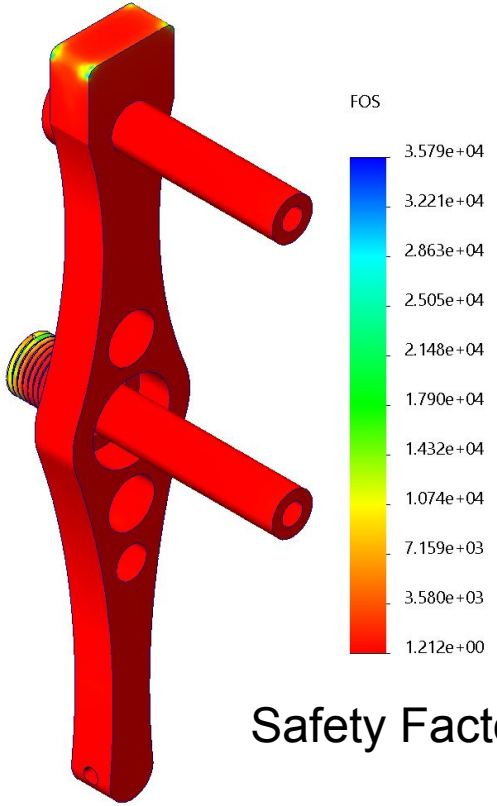


Safety Factor

# Real Life Results

In real life, the tensioner had a significant twist which caused excessive displacement.

The displacement caused the pulleys to be misaligned with the belt.

This discrepancy is likely due to idealized rigidity of the bearing connection, and the added compliance from the pulleys (which were omitted from FEA).

To compensate, we made the tensioner arm out of steel instead of aluminum.

# Steel Tensioner

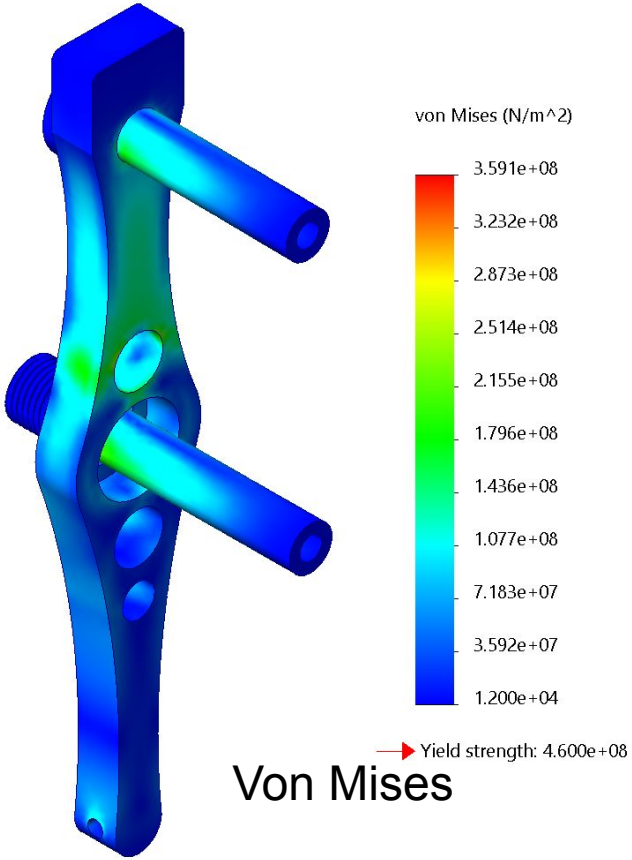


Von Mises

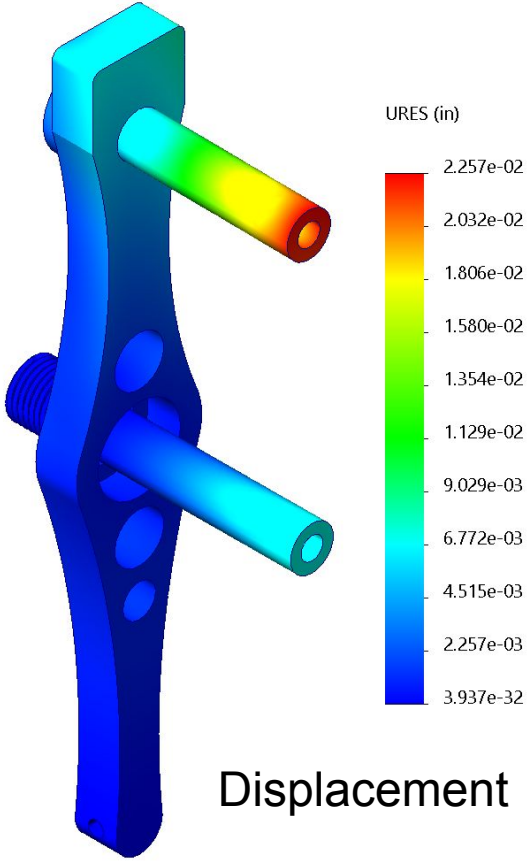


Displacement

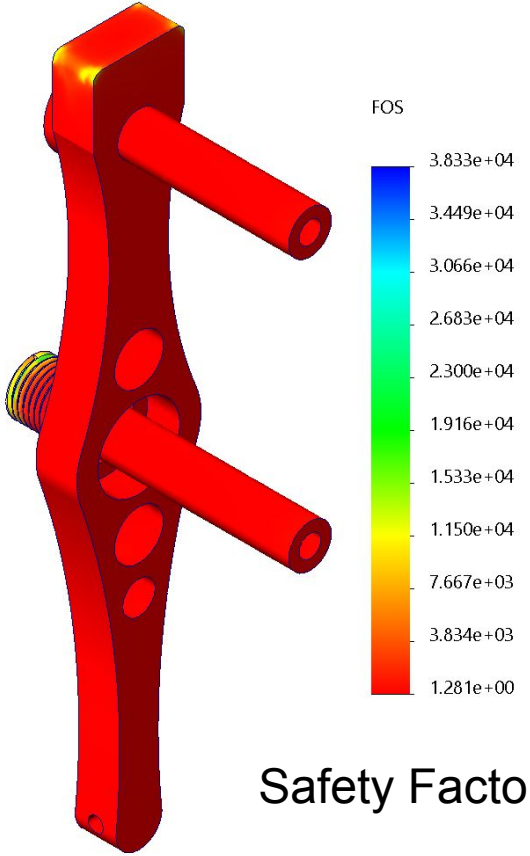


Safety Factor

# What Changed?

- Stress reduced slightly
- Displacement cut by over half, 56 thou to 23 thou in FEA
- FOS increased from 1.21 to 1.28

The goal was to reduce displacement, which this change achieves.

# Advanced FEA Example: Front Upright

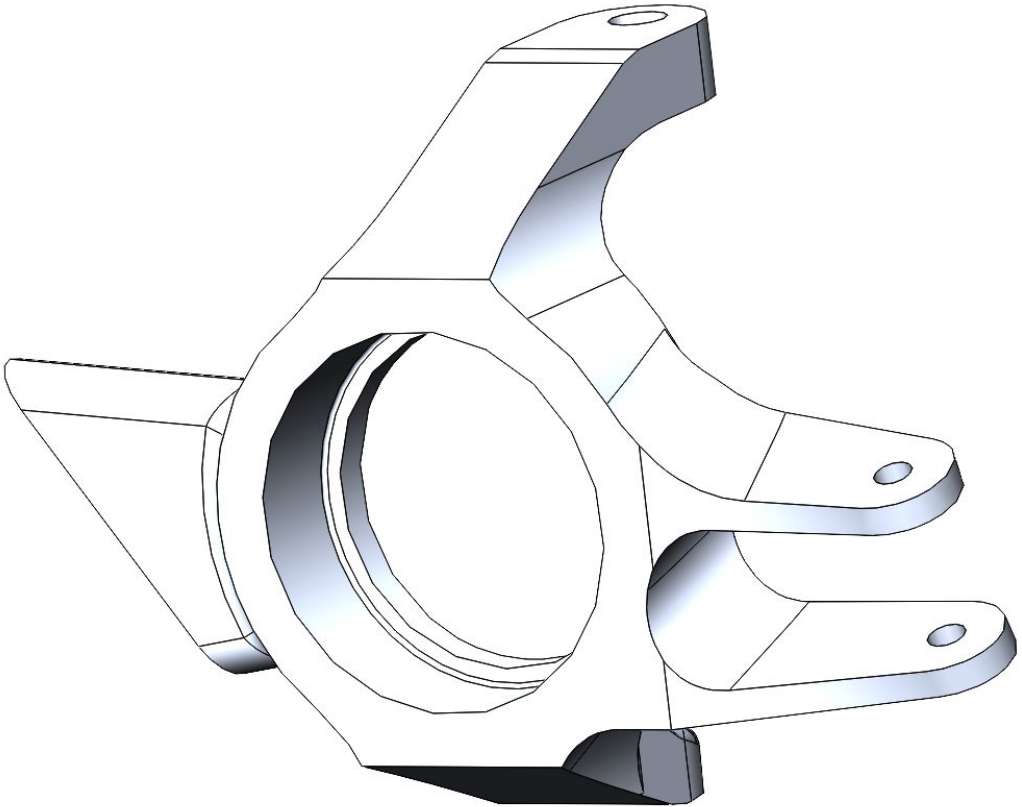

# Step 1: Model

Uprights connect to suspension arms

Suspension points from Lotus modeled in Front Upright part as 3D sketch

FEA setup should:

- Allow suspension arms to be at any possible position within full bump and droop
- Include stiffness of suspension arms and tie rods

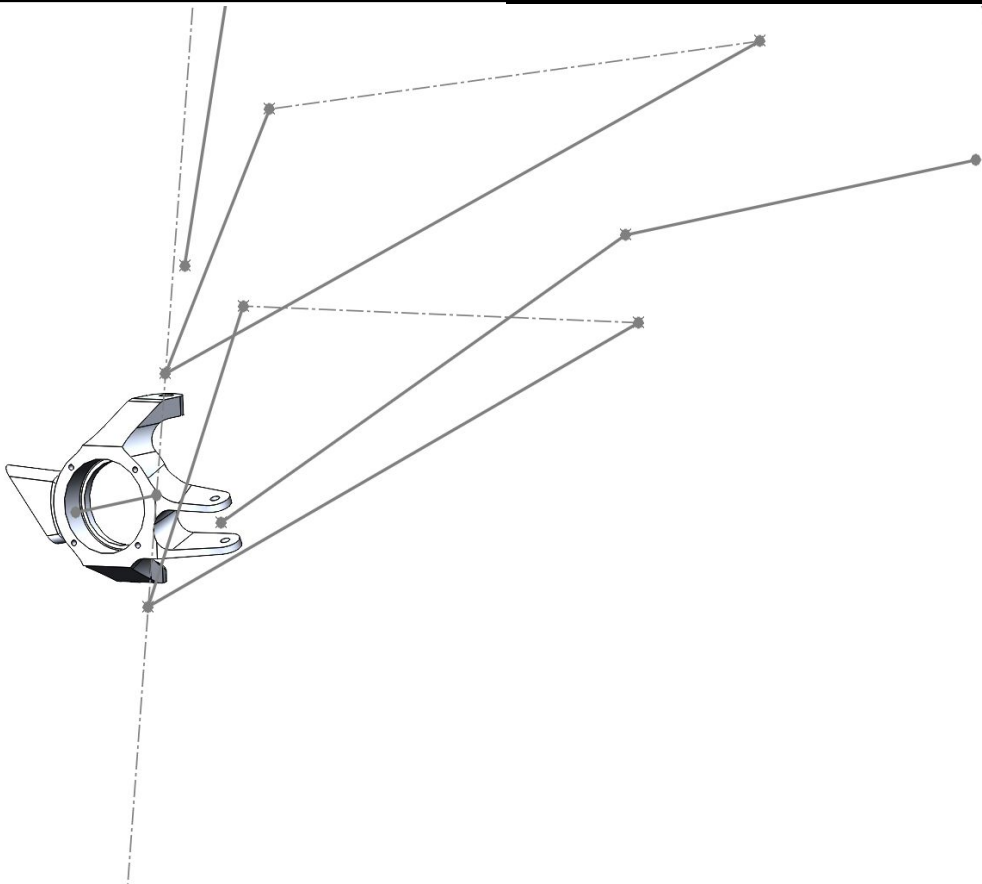

# Possible Strategies

| | Option 1: Assembly FEA | Option 2: Part FEA with multiple bodies |
|---|---|---|
| **Benefits** | ● More accurate influence of other suspension members | ● Faster to calculate<br>● Independent of suspension arm CAD model |
| **Drawbacks** | ● Much slower to run<br>● Requires suspension arm CAD to be finalized | ● Less accurate model of other suspension members |

# Modeling Movable Suspension Members

Suspension is defined as a 3D sketch of points at specific coordinates.

We want to be able to move these lines to represent different suspension positions.

However, we can’t move the upright, so the suspension will have to pivot around its upright attachment points.

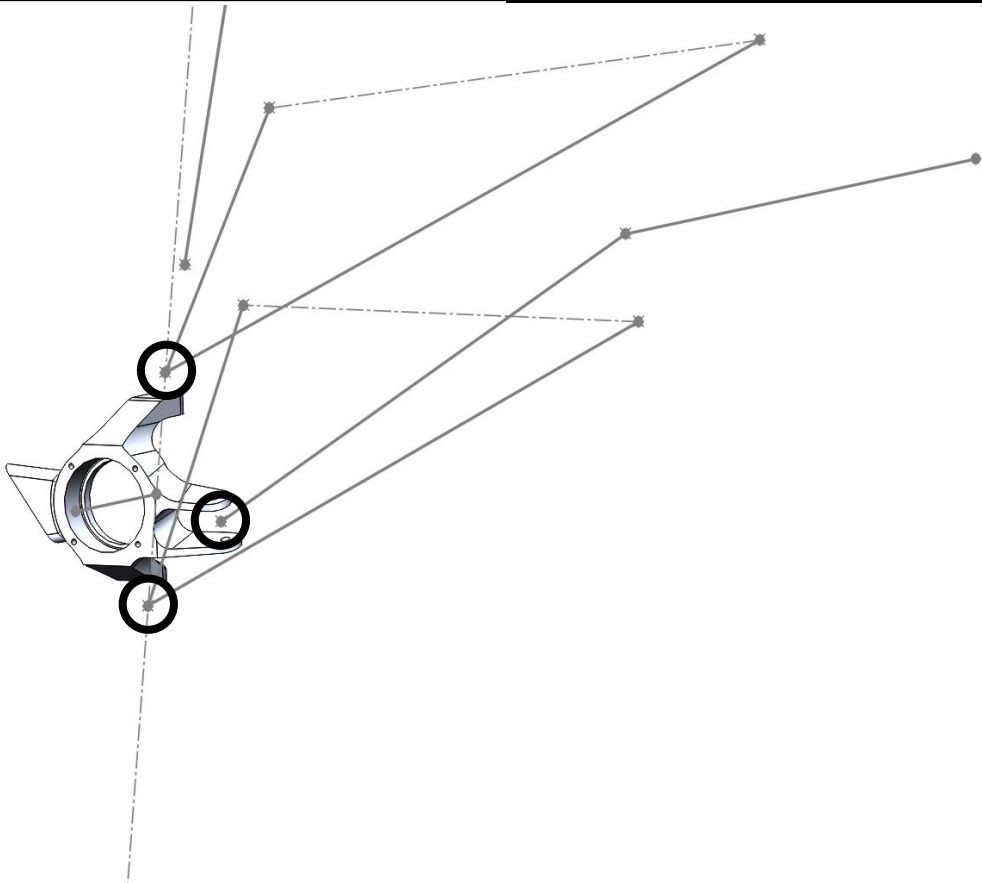

# Movable Suspension

Define a new 3D sketch.

Create lines for every connecting suspension member, *approximately* in the right position.

**Do NOT constrain these lines to existing ones.**
**That prevents movement!**

We will make suspension members rigid by setting length dimensions for each line.

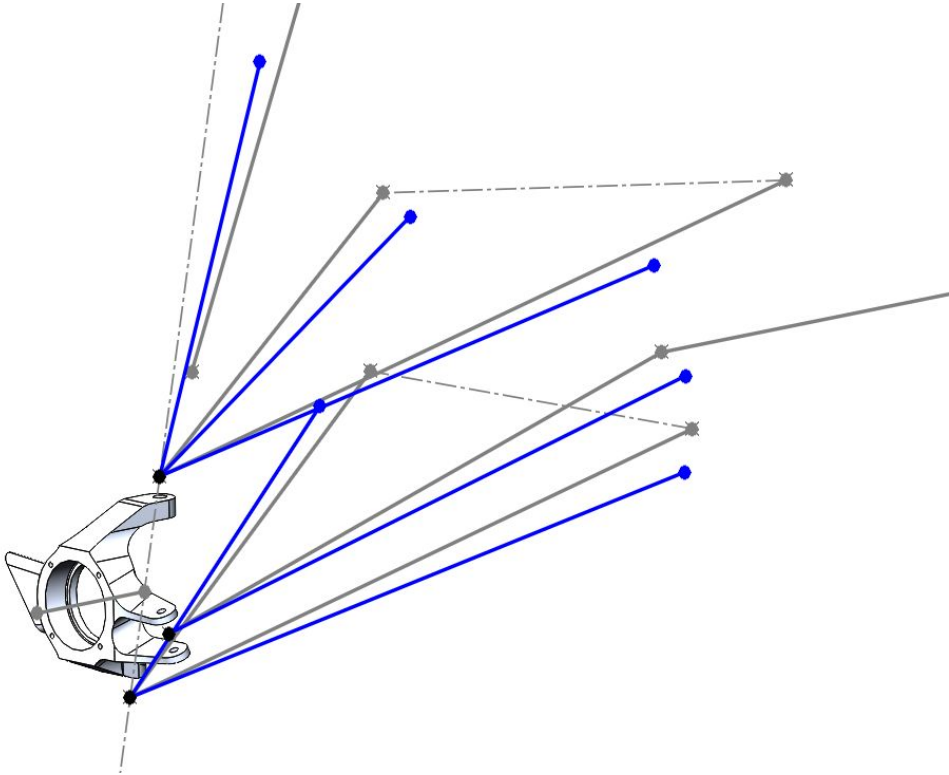

# Movable Suspension

Connect each “stationary” point with at least three other stationary points. This will make their connections “rigid” once dimensions are applied.

This is one possible configuration →

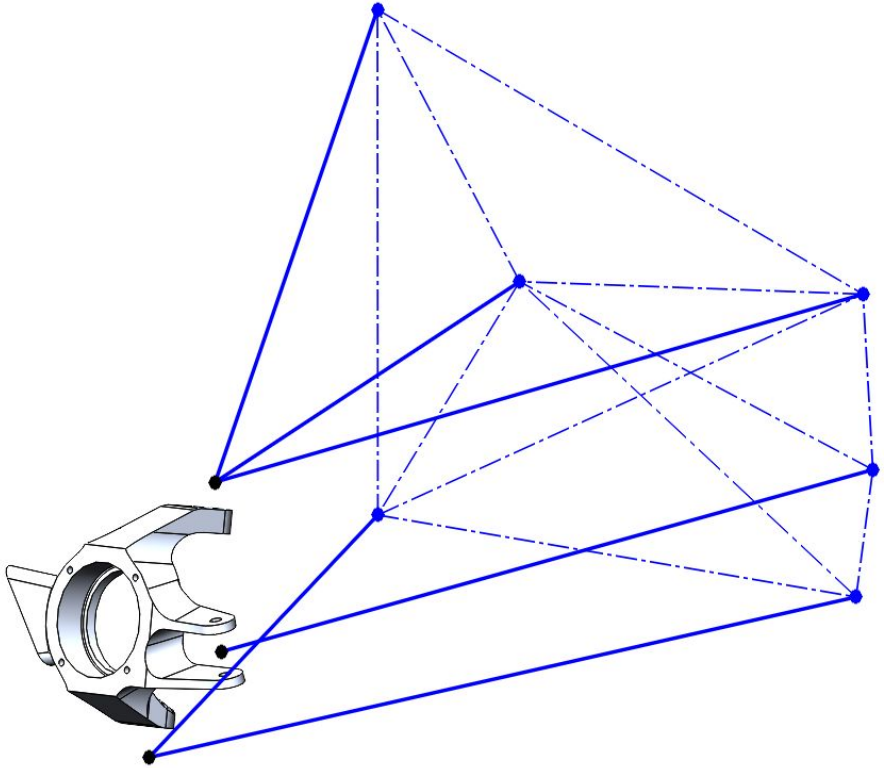

# Movable Suspension

For each dimension, use the measuring tool to get the distance between points from the original 3D sketch:

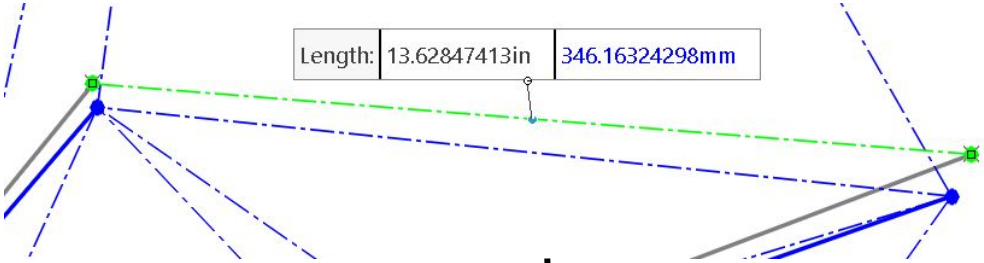


Don’t dimension the line which represents the shock, since it can change length.

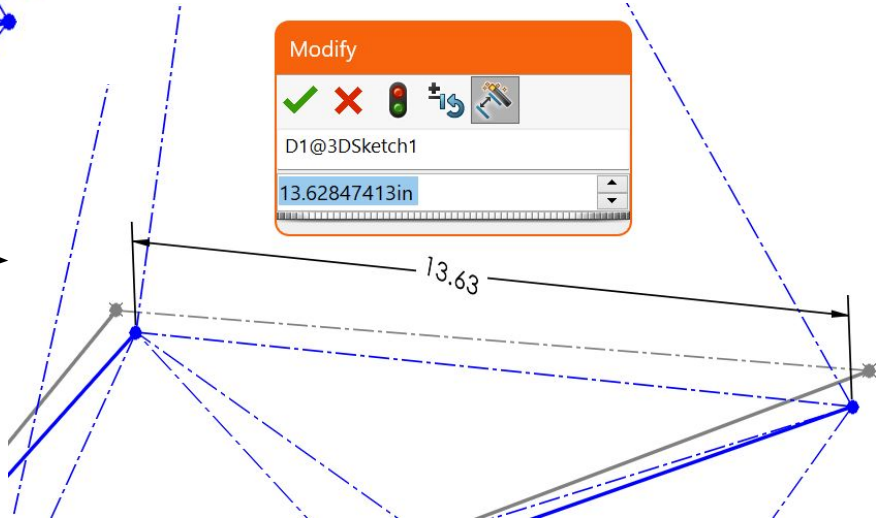

# Movable Suspension

Add a fourth line to the shock mount point to remove an unwanted rotational degree of freedom.

At this point, the suspension should be able to move with one degree of freedom.

Note that this setup does not allow changing steering angle.

**Moving the suspension “invalidates” the Master Coordinate System.**

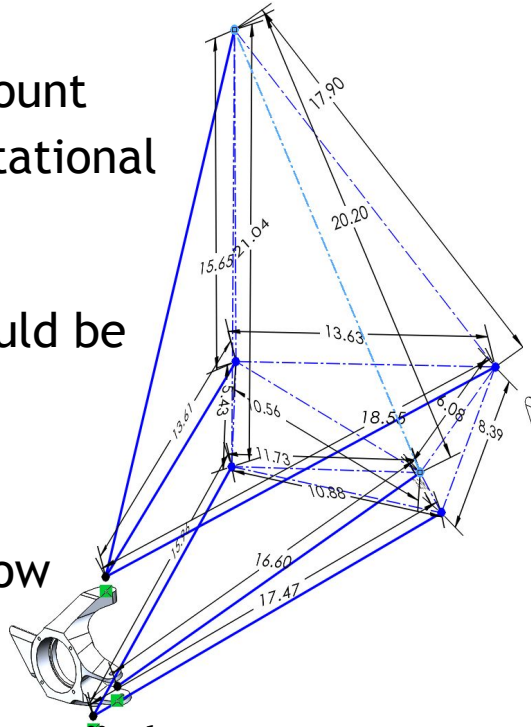


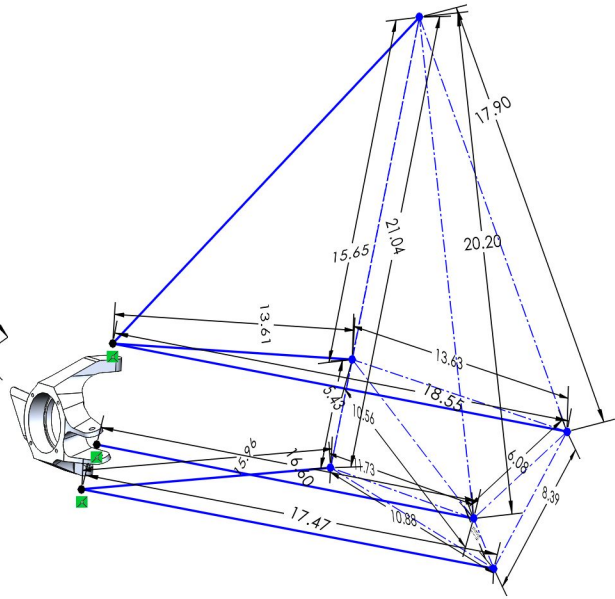

# Setting Suspension Position

Add a dimension to the shock line to set the suspension position.

Creating multiple configurations for this dimension allows for different FEA studies to use different suspension positions.

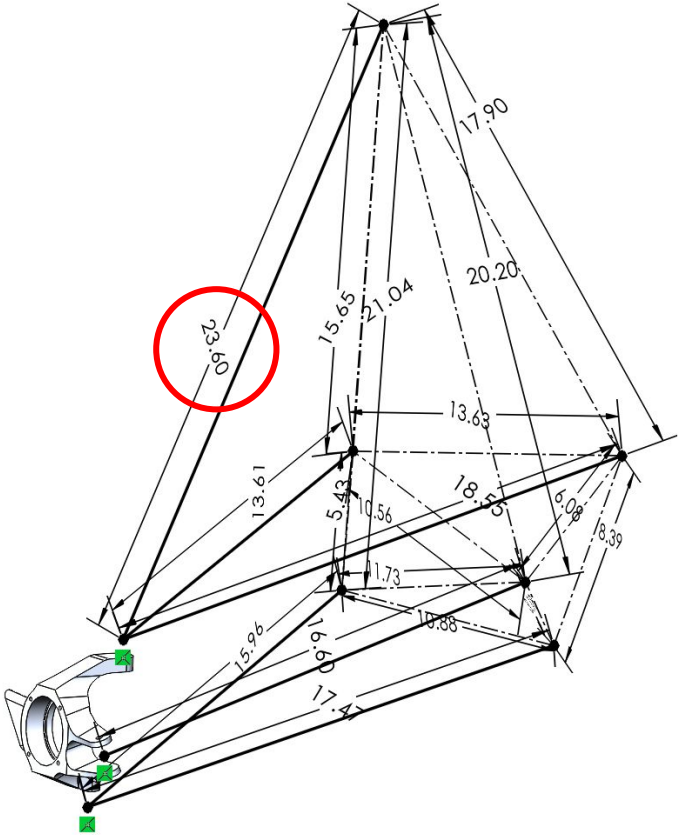

# Coordinate System for Applied Loads

Loads on the upright originate from the wheels.

To apply the remote loads, we need to have a coordinate system.

The origin we will use is the outer edge of the wheel bearing bore, oriented as shown →

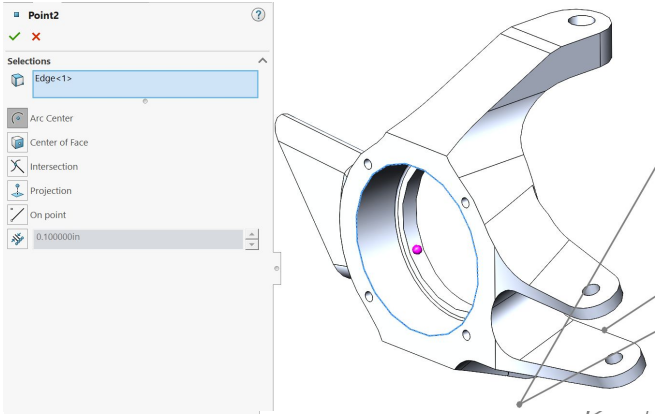


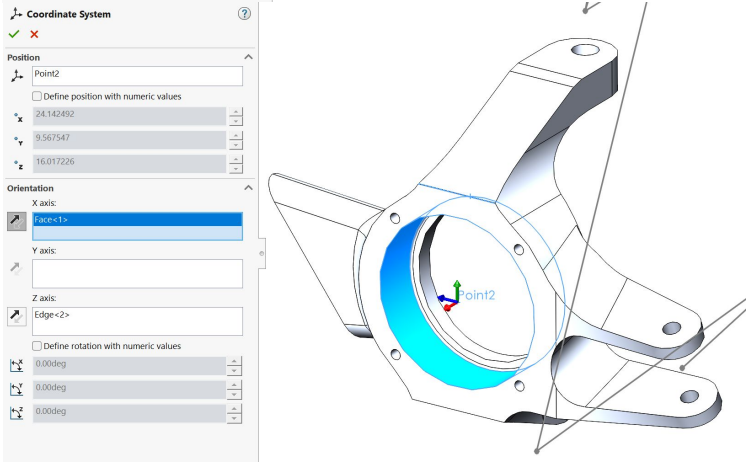

# Suspension Arm Mounting Geometry