GENERALIZED $\mathbb{N}$-WEIGHTED SIMPLICIAL COMPLEX

SHUAI WEI AND KERI SATHER-WAGSTAFF

Abstract.

Notation .1. For a subset $V' \subseteq V$ and a positive-integered function $\delta' : V' \to \mathbb{N}$, notationally set

$$(V', \delta') = \{v_i^{\delta'(v_i)} \mid v_i \in V'\},$$

where $\delta'(v_i)$ is the weight of v_i.

Assumption .2. Let $\mathbf{M} \in \mathbb{N}_{2\times d}$ be a matrix whose i^{th} column is $\begin{bmatrix} m_i \\ M_i \end{bmatrix}$ satisfying that $m_i \leq M_i$ for $i = 1, \ldots, d$.

Definition .3. For subsets $V_1', V_2' \subseteq V'$ and functions $\delta_1' : V_1' \to \mathbb{N}$ and $\delta_2' : V_2' \to \mathbb{N}$, we write $(V_1', \delta_1') \preccurlyeq (V_2', \delta_2')$ if $V_1' \subseteq V_2'$ and $\delta_1' \leq \delta_2'|_{V_2'}$. A *generalized* $\mathbb{N}$*-weighted simplicial complex* on V is a non-empty collection Υ of sets of form (V', δ') with $V' \subseteq V$ and $\delta' : V' \to \mathbb{N}$ that is closed under $\preccurlyeq$. An element of Υ is called a *face* of Υ. We say $(V', \delta') \in \Upsilon$ is *maximal* if it is maximal with respect to $\preccurlyeq$, i.e., there does not exist another $(V'', \delta'') \in \Upsilon$ such that $(V', \delta') \prec (V'', \delta'')$. A maximal element of Υ with respect to $\preccurlyeq$ is a *facet* of Υ.

Definition .4. Let Υ be a generalized $\mathbb{N}$-weighted simplicial complex on V. Define

$$\Upsilon^{\mathbf{M}} = \{(V', \delta') \in \Upsilon \mid m_i \leq \delta'(v_i) \leq M_i, \ \forall\ v_i \in V'\}.$$

This is the *Generalized weighted simplicial complex* with respect to $\mathbf{M}$. We have $\Upsilon^{\mathbf{M}} \subseteq \Upsilon$.

Example .5. Let $V = \{v_1, v_2, v_3\}$, $[2] = \{1, 2\}$ and

$$\Upsilon = \{\{v_1^i, v_2^j\} \mid i \in [2],\ j \in \mathbb{N}\} \sqcup \{\{v_1^i\} \mid i \in [2]\} \sqcup \{\{v_2^j\} \mid j \in \mathbb{N}\} \sqcup \{v_3\} \sqcup \{\emptyset\}.$$

Then Υ is a generalized $\mathbb{N}$-weighted simplicial complex on V with facets $\{v_3\}$. The poset $(\Upsilon, \preccurlyeq)$ doesn't satisfy the ascending chain condition. Let $\mathbf{M} = \begin{bmatrix} 1 & 1 & 2 \\ 2 & 3 & 2 \end{bmatrix} \in \mathbb{N}_{2\times 3}$. Then

$$\Upsilon^{\mathbf{M}} = \{\{v_1^i, v_2^j\} \mid i = 1, \ldots, 2,\ j = 1, \ldots, 3\} \sqcup \{\{v_1^i\} \mid i = 1, \ldots, 2\} \sqcup \{\{v_2^j\} \mid j = 1, \ldots, 3\} \sqcup \{\emptyset\}.$$

The facets of $\Upsilon^{\mathbf{M}}$ are $\{v_1^2, v_2^3\}$.

Assumption .6. For the rest of this section, assume Υ is a generalized $\mathbb{N}$-weighted simplicial complex on V.

Notation .7. For $V' \subseteq V'$ and $\delta' : V' \to \mathbb{N}$, set

$$\underline{X}^{(V', \delta')} := \prod_{v_i \in V_i'} X_i^{\delta''(v_i)}.$$

Definition .8. The *Stanley-Reisner ideal* of R associated to $\Upsilon^{\mathbf{M}}$ is the ideal "generated by the non-faces (V', δ') with $V' \subseteq V$ and $\delta' : V' \to \mathbb{N}$ of $\Upsilon^{\mathbf{M}}$ such that $m_i \leq \delta'(v_i) \leq M_i$ for any $v_i \in V'$":

$$\begin{aligned} J_{\Upsilon^{\mathbf{M}}} &= \Big(\underline{X}^{(V',\delta')} \mid V' \subseteq V,\ \delta' : V' \to \mathbb{N},\ m_i \leq \delta'(v_i) \leq M_i\ \forall\ v_i \in V',\ \text{and } (V',\delta') \notin \Upsilon^{\mathbf{M}}\Big)R \\ &= \Big(\underline{X}^{(V',\delta')} \mid V' \subseteq V,\ \delta' : V' \to \mathbb{N},\ m_i \leq \delta'(v_i) \leq M_i\ \forall\ v_i \in V',\ \text{and } (V',\delta') \notin \Upsilon\Big)R. \end{aligned}$$

Example .9. Consider the generalized $\mathbb{N}$-weighted simplicial complex $\Upsilon^{\mathbf{M}}$ from Example .5. Then

$$\begin{aligned} J_{\Upsilon^{\mathbf{M}}} = (&X_1^2X_2^3X_3^2, X_1^2X_2^3X_3, X_1^2X_2^2X_3^2, X_1^2X_2^2X_3, X_1^2X_2X_3^2, X_1^2X_2X_3, X_1X_2^3X_3^2, \\ &X_1X_2^3X_3, X_1X_2^2X_3^2, X_1X_2^2X_3, X_1X_2X_3^2, X_1X_2X_3, X_1^2X_3^2, X_1^2X_3, X_1X_3^2, \\ &X_1X_3, X_2^3X_3^2, , X_2^3X_3, X_2^2X_3^2, X_2^2X_3, X_2X_3^2, X_2X_3, X_3^2)R \\ = (&X_1X_3, X_2X_3, X_3^2)R. \end{aligned}$$

Definition .10. Let $\rho = (V', \delta')$ with $V' \subseteq V$ and $\delta' : V' \to \mathbb{N}$. Let

$$\begin{aligned} W_\rho^{\mathbf{M}} &= \{v_i \in V' \mid \delta'(v_i) < M_i\}, \\ U_\rho^{\mathbf{M}} &= \{v_i \in V' \mid \delta'(v_i) > m_i\}. \end{aligned}$$

Define $\tau_\rho^{\mathbf{M}} : (V \smallsetminus V') \sqcup W_\rho^{\mathbf{M}} \to \mathbb{N}$ by

$$\tau_\rho^{\mathbf{M}}(v_i) = \begin{cases} m_i & \text{if } v_i \in V \smallsetminus V', \\ \delta'(v_i) + 1 & \text{if } v_i \in W_\rho^{\mathbf{M}}, \end{cases}$$

and $\gamma_\rho^{\mathbf{M}} : (V \smallsetminus V') \sqcup U_\rho^{\mathbf{M}} \to \mathbb{N}$ by

$$\gamma_\rho^{\mathbf{M}}(v_i) = \begin{cases} M_i & \text{if } v_i \in V \smallsetminus V', \\ \delta'(v_i) - 1 & \text{if } v_i \in U_\rho^{\mathbf{M}}. \end{cases}$$

Assume $m_i \leq \delta'(v_i)$ for any $v_i \in V'$, then define $\varphi_\rho^{\mathbf{M}} : (V \smallsetminus V') \sqcup W_\rho^{\mathbf{M}} \to \mathbb{N}$ by

$$\varphi_\rho^{\mathbf{M}}(v_i) = \begin{cases} M_i & \text{if } v_i \in V \smallsetminus V', \\ M_i + m_i - \delta'(v_i) - 1 & \text{if } v_i \in W_\rho^{\mathbf{M}}. \end{cases}$$

Definition .11. For each $\rho = (V', \delta')$ with $V' \subseteq V$ and $\delta' : V' \to \mathbb{N}$, let $Q_\rho^{\mathbf{M}} \subseteq R$ be the ideal defined by

$$\begin{aligned} Q_\rho^{\mathbf{M}} &= (X^{\tau_\rho^{\mathbf{M}}(v_i)} \mid v_i \in (V \smallsetminus V') \sqcup W_\rho^{\mathbf{M}})R \\ &= P((V \smallsetminus V') \sqcup W_\rho^{\mathbf{M}}, \tau_\rho^{\mathbf{M}}). \end{aligned}$$

Lemma .12. Let $\rho = (V', \delta')$ with $V' \subseteq V'$ and $\delta' : V' \to \mathbb{N}$ such that $m_i \leq \delta'(v_i) \leq M_i$ for any $v_i \in V'$. Then $J_{\Upsilon^{\mathbf{M}}} \subseteq Q_\rho^{\mathbf{M}}$ if and only if ρ is a face of $\Upsilon^{\mathbf{M}}$.

Proof. "$\Rightarrow$". Assume $\rho = (V', \delta')$ is not a face of $\Upsilon^{\mathbf{M}}$, i.e., $\rho \notin \Upsilon^{\mathbf{M}}$. Then $\underline{X}^{(V',\delta')} \in J_{\Upsilon^{\mathbf{M}}}$. If $W_\rho^{\mathbf{M}} = \emptyset$, then $\underline{X}^{(V',\delta')} \notin Q_\rho^{\mathbf{M}}$ by definition. Assume $W_\rho^{\mathbf{M}} \neq \emptyset$. For any generator $X^{\tau_\rho^{\mathbf{M}}(v_i)}$ of $Q_\rho^{\mathbf{M}}$ with $v_i \in W_\rho^{\mathbf{M}}$, we have $\tau_\rho^{\mathbf{M}}(v_i) = \delta'(v_i) + 1 > \delta'(v_i)$, so $X^{\tau_\rho^{\mathbf{M}}(v_i)} \nmid \underline{X}^{(V',\delta')}$. Hence $\underline{X}^{(V',\delta')} \notin Q_\rho^{\mathbf{M}}$. So $J_\Upsilon \not\subseteq Q_\rho^{\mathbf{M}}$.

"$\Leftarrow$". Assume $\rho \in \Upsilon^{\mathbf{M}}$. Let $\underline{X}^{(V'',\delta'')} \in J_{\Upsilon^{\mathbf{M}}}$ be a generator with $V'' \subseteq V$ and $\delta'' : V'' \to \mathbb{N}$. Then $m_i \leq \delta''(v_i) \leq M_i$ for any $v_i \in V''$ and $(V'', \delta'') \notin \Upsilon^{\mathbf{M}}$. So $(V'', \delta'') \not\preccurlyeq \rho$. Then we have the following two cases.

(a) There exists $v_i \in V'' \smallsetminus V' \subseteq V \smallsetminus V'$ with $\tau_\rho^{\mathbf{M}}(v_i) = m_i \leq \delta''(v_i)$. Then $X^{\tau_\rho^{\mathbf{M}}(v_i)} \mid \underline{X}^{(V'',\delta'')}$.

(b) There exists $v_i \in V' \cap V''$ such that $\delta'(v_i) < \delta''(v_i) \leq M_i$. Then $v_i \in W_\rho^{\mathbf{M}}$ and so $\tau_\rho^{\mathbf{M}}(v_i) = \delta'(v_i) + 1 \leq \delta''(v_i)$. So $X^{\tau_\rho^{\mathbf{M}}(v_i)} \mid \underline{X}^{(V'',\delta'')}$.
Hence $J_{\Upsilon\mathrm{M}} \subseteq Q_\rho^{\mathbf{M}}$. □

Proposition .13. The monomial ideal $J_{\Upsilon\mathrm{M}}$ can be written as a finite intersection of irreducible ideals of the form $Q_\rho^{\mathbf{M}}$ with $\rho = (V', \delta')$ such that $m_i \leq \delta'(v_i) \leq M_i$ for any $v_i \in V'$.

Proof. [**?**, Theorem 7.5.1] gives a decomposition of $J_{\Upsilon\mathrm{M}}$. Let $I = P(V'', \delta'')$ occur in the decomposition and define $\wp = (V'', \delta'')$. We have $m_i \leq \delta''(v_i) \leq M_i$ for any $v_i \in V''$ based on the decomposition and definition of $J_{\Upsilon\mathrm{M}}$. Define $\rho := (V', \delta')$ by $V' := (V \smallsetminus V'') \sqcup U_\wp^{\mathbf{M}}$ and $\delta' := \gamma_\wp^{\mathbf{M}}$. Then $\delta'(v_i) = \gamma_\wp^{\mathbf{M}}(v_i) = M_i$ for any $v_i \in V \smallsetminus V''$ and $\delta'(v_i) = \gamma_\wp^{\mathbf{M}}(v_i) = \delta''(v_i) - 1$ for any $v_i \in U_\wp^{\mathbf{M}}$. For any $v_i \in U_\wp^{\mathbf{M}} \subseteq V''$, since $m_i < \delta''(v_i) \leq M_i$, we have $m_i \leq \delta'(v_i) \leq M_i - 1$. Note that

$$U_\wp^{\mathbf{M}} = \{v_i \in (V \smallsetminus V'') \sqcup U_\wp^{\mathbf{M}} \mid \gamma_\wp^{\mathbf{M}}(v_i) < M_i\} = \{v_i \in V' \mid \delta'(v_i) < M_i\} = W_\rho^{\mathbf{M}}.$$

So $(V \smallsetminus V') \sqcup W_\rho^{\mathbf{M}} = (V'' \smallsetminus U_\wp^{\mathbf{M}}) \sqcup U_\wp^{\mathbf{M}} = V''$ and

$$\tau_\rho^{\mathbf{M}}(v_i) = \begin{cases} m_i = \delta''(v_i) & \text{if } v_i \in V \smallsetminus V' = V'' \smallsetminus U_\wp^{\mathbf{M}}, \\ \delta'(v_i) + 1 = \gamma_\wp^{\mathbf{M}}(v_i) + 1 = \delta''(v_i) & \text{if } v_i \in W_\rho^{\mathbf{M}} = U_\wp^{\mathbf{M}}. \end{cases}$$

Hence $((V \smallsetminus V') \sqcup W_\rho^{\mathbf{M}}, \tau_\rho^{\mathbf{M}}) = (V'', \delta'')$ and thus $Q_\rho^{\mathbf{M}} = P(V'', \delta'') = I$. □

Example .14. Consider the Stanley-Reisner ideal $J_{\Upsilon\mathrm{M}}$ from Example .9. By [**?**, Theorem 7.5.1], we have

$$\begin{aligned} J_{\Upsilon\mathrm{M}} &= (X_1X_3, X_2X_3, X_3^2)R \\ &= (X_1, X_2, X_3^2)R \cap (X_1, X_3, X_3^2)R \cap (X_3, X_2, X_3^2)R \cap (X_3, X_3, X_3^2)R \\ &= (X_1, X_2, X_3^2)R \cap (X_1, X_3)R \cap (X_2, X_3)R \cap (X_3)R. \end{aligned}$$

Let $I = (X_2, X_3)R = P(V'', \delta'')$ and $\wp := (V'', \delta'') = \{v_2^1, v_3^1\}$. Let $\rho = (V', \delta')$ with $V' = (V \smallsetminus V'') \sqcup U_\wp^{\mathbf{M}}$, $U_\wp^{\mathbf{M}} = \{v_i \in V'' \mid \delta''(v_i) > m_i\} = \emptyset$ and $\delta' = \gamma_\wp^{\mathbf{M}}$. So $V' = V \smallsetminus V'' = \{v_1\}$, $W_\rho^{\mathbf{M}} = \emptyset$ and $\tau_\rho^{\mathbf{M}} : V \smallsetminus V' \to \mathbb{N}$ given by $\tau_\rho^{\mathbf{M}}(v_2) = m_2 = 1$ and $\tau_\rho^{\mathbf{M}}(v_3) = m_3 = 1$. Hence $((V \smallsetminus V') \sqcup W_\rho^{\mathbf{M}}, \tau_\rho^{\mathbf{M}}) = \{v_2^1, v_3^1\} = (V'', \delta'')$.

Proposition .15. Let $\rho = (V', \delta')$ with $V' \subseteq V$ and $\delta' : V' \to \mathbb{N}$ and $\wp = (V'', \delta'')$ with $V'' \subseteq V$ and $\delta'' : V'' \to \mathbb{N}$ such that $m_i \leq \delta'(v_i) \leq M_i$ for any $v_i \in V'$ and $m_j \leq \delta''(v_j) \leq M_j$ for any $v_j \in V''$. Then $\rho \preccurlyeq \wp$ if and only if $Q_\wp^{\mathbf{M}} \subseteq Q_\rho^{\mathbf{M}}$.

Proof. "$\Rightarrow$". Since $\rho \preccurlyeq \wp$, we have $V' \subseteq V''$ and $\delta' \leq \delta''|_{V'}$. Let $v_i \in V \smallsetminus V''$, then $v_i \in V \smallsetminus V'$ and so $\tau_\rho^{\mathbf{M}}(v_i) = m_i = \tau_\wp^{\mathbf{M}}(v_i)$. Assume now $v_i \in W_\wp^{\mathbf{M}} = \{v_j \in V'' \mid \delta''(v_j) < M_i\}$. If $v_i \in V'$, then $\delta'(v_i) \leq \delta''(v_i) < M_i$, so $v_i \in W_\rho^{\mathbf{M}}$ and $\tau_\rho^{\mathbf{M}}(v_i) = \delta'(v_i) + 1 \leq \delta''(v_i) + 1 = \tau_\wp^{\mathbf{M}}(v_i)$. If $v_i \notin V'$, then $v_i \in V \smallsetminus V'$ and so $\tau_\rho^{\mathbf{M}}(v_i) = m_i < \delta''(v_i) + 1 = \tau_\wp^{\mathbf{M}}(v_i)$. Hence $(V \smallsetminus V'') \sqcup W_\wp^{\mathbf{M}} \subseteq (V \smallsetminus V') \sqcup W_\rho^{\mathbf{M}}$ and $\tau_\rho^{\mathbf{M}}|_{(V \smallsetminus V'') \sqcup W_\wp^{\mathbf{M}}} \leq \tau_\wp^{\mathbf{M}}$. So $Q_\wp^{\mathbf{M}} \subseteq Q_\rho^{\mathbf{M}}$.

"$\Leftarrow$". We have $(V \smallsetminus V'') \sqcup W_\wp^{\mathbf{M}} \subseteq (V \smallsetminus V') \sqcup W_\rho^{\mathbf{M}}$ and $\tau_\rho^{\mathbf{M}}|_{(V \smallsetminus V') \sqcup W_\wp^{\mathbf{M}}} \leq \tau_\wp^{\mathbf{M}}$. So $V' \smallsetminus W_\rho^{\mathbf{M}} \subseteq V'' \smallsetminus W_\wp^{\mathbf{M}}$. Suppose $V' \not\subseteq V''$. Then there exists $v_i \in V' \smallsetminus V'' \subseteq V \smallsetminus V''$, and so $v_i \in W_\rho^{\mathbf{M}}$. Since $\tau_\rho^{\mathbf{M}}|_{(V \smallsetminus V') \sqcup W_\wp^{\mathbf{M}}} \leq \tau_\wp^{\mathbf{M}}$, we have $\delta'(v_i) + 1 = \tau_\rho^{\mathbf{M}}(v_i) \leq \tau_\wp^{\mathbf{M}}(v_i) = m_i$, a contradiction. So $V' \subseteq V''$. Suppose $\delta' \not\leq \delta''|_{V'}$. Then there exists $v_i \in V'$ such that $M_i \geq \delta'(v_i) > \delta''(v_i)$. So $v_i \in W_\wp^{\mathbf{M}}$. Since $v_i \notin V \smallsetminus V'$ and $v_i \in (V \smallsetminus V'') \sqcup W_\wp^{\mathbf{M}} \subseteq (V \smallsetminus V') \sqcup W_\rho^{\mathbf{M}}$, we have $v_i \in W_\rho^{\mathbf{M}}$. Then $\delta'(v_i) + 1 = \tau_\rho^{\mathbf{M}}(v_i) \leq \tau_\wp^{\mathbf{M}}(v_i) = \delta''(v_i) + 1$ and so $\delta'(v_i) \leq \delta''(v_i)$, a contradiction. So $\delta' \leq \delta''|_{V'}$. Thus, $\rho \preccurlyeq \wp$. □

Theorem .16. *The ideal $J_{\Upsilon^{\mathbf{M}}}$ has the following irreducible decomposition*

$$J_{\Upsilon^{\mathbf{M}}} = \bigcap_{\rho \in \Upsilon^{\mathbf{M}}} Q_\rho^{\mathbf{M}} = \bigcap_{\rho \text{ facet}} Q_\rho^{\mathbf{M}},$$

where the first intersection is taken over all faces of $\Upsilon^{\mathbf{M}}$ and the second intersection is taken over all facets of $\Upsilon^{\mathbf{M}}$. The second intersection is irredundant.

Proof. Proposition .15 shows that the second intersection is irredundant.

We first prove the first equality. "$\subseteq$" follows from Lemma .12.

"$\supseteq$". Proposition .13 provides $\rho_1 = (V_1', \delta_1'), \dots, \rho_n = (V_n', \delta_n')$ with $m_i \leq \delta_j'(v_i) \leq M_i$ for any $v_i \in V_j'$ for $j = 1, \dots, n$ such that $J_{\Upsilon^{\mathbf{M}}} = \bigcap_{i=1}^n Q_{\rho_i}^{\mathbf{M}}$. So $J_{\Upsilon^{\mathbf{M}}} \subseteq Q_{\rho_i}^{\mathbf{M}}$ for $i = 1, \dots, n$. Then Lemma .12 implies that $\rho_i \in \Upsilon^{\mathbf{M}}$ for $i = 1, \dots, n$. Hence $\bigcap_{\rho \in \Upsilon^{\mathbf{M}}} Q_\rho^{\mathbf{M}} \subseteq \bigcap_{i=1}^n Q_{\rho_i}^{\mathbf{M}} = J_{\Upsilon^{\mathbf{M}}}$.

We then prove the second equality. "$\subseteq$" is routine.

"$\supseteq$" follows from the fact that every face of $\Upsilon^{\mathbf{M}}$ is contained in a facet, along with Proposition .15. □

1. Weighted independence complex

In this section, let $\mathbf{M} \in \mathbb{N}_{2\times d}$ a matrix whose i^{th} row is $[m_i \ M_i]$ satisfying that $m_i \leq M_i$ for $i = 1, \dots, d$.

Definition .17. We say that (V', δ') with $V' \subseteq V$ and $\delta' : V' \to \mathbb{N}$ is a *weighted independence* set in G_ω if for any $v_i, v_j \in V'$, either $v_i v_j \notin E$ or $\min\{\delta'(v_i), \delta'(v_j)\} < \omega(v_i v_j)$. Let Υ_ω denote the set of weighted independence sets (V', δ') in G_ω. This is the *weighted independence complex* of G_ω.

A face in the weighted independence complex $\Upsilon_\omega^{\mathbf{M}}$ with restpect to $\mathbf{M}$ is called an *weighted independence set* in G_ω with respect to $\mathbf{M}$.

Theorem .18. *If $m_i < \min\{\omega(v_i v_j) \mid v_i v_j \in E\}$ for $i = 1, \dots, d$, then every facet of $\Upsilon_\omega^{\mathbf{M}}$ has cardinality $|V|$, so $\Upsilon_\omega^{\mathbf{M}}$ is pure.*

Proof. Let $(V', \delta') \in \Upsilon_\omega^{\mathbf{M}}$ be a facet. If $|(V', \delta')| = |V'| < |V|$, then there exists $v_i \in V \smallsetminus V'$, then $(V', \delta') \sqcup \{v_i^{m_i}\} \in \Upsilon_\omega^{\mathbf{M}}$, contradicted by the maximality of (V', δ'). □

Assumption .19. For the rest of this secition, assume $m_i \leq \min\{\omega(v_i v_j) \mid v_i v_j \in E\}$ and $\max\{\omega(v_i v_j) \mid v_i v_j \in E\} \leq M_i$ for $i = 1, \dots, d$.

The next result makes explicit the algebraic connection between a given weighted graph G_ω and $\Upsilon_\omega^{\mathbf{M}}$ given $m_i = \max\{1, \min\{\omega(v_i v_j) \mid v_i v_j \in E\}\}$ and $\max\{\omega(v_i v_j) \mid v_i v_j \in E\} \leq M_i$ for $i = 1, \dots, d$.

Theorem .20.

$$I(G_\omega) = J_{\Upsilon_\omega^{\mathbf{M}}}.$$

Proof. "$\subseteq$". Let $X_i^{\omega(v_i v_j)} X_j^{\omega(v_i v_j)} \in I(G_\omega)$ be a generator with $v_i v_j \in E$. Define $V' = \{v_i, v_j\}$ and $\delta' : V' \to \mathbb{N}$ by $\delta'(v_i) = \omega(v_i v_j)$ and $\delta'(v_j) = \omega(v_j v_i)$. Then $m_i \leq \delta'(v_i) = \omega(v_i v_j) \leq M_i$ and $m_j \leq \delta'(v_j) = \omega(v_i v_j) \leq M_j$. Since $\min\{\delta'(v_i), \delta'(v_j)\} \geq \omega(v_i v_j)$, we have $(V', \delta') \notin \Upsilon_\omega^{\mathbf{M}}$. So $(V', \delta') \in J_{\Upsilon_\omega^{\mathbf{M}}}$.

"$\supseteq$". Let $\underline{X}^{(V', \delta')} \in J_{\Upsilon_\omega^{\mathbf{M}}}$ be a generator with $V' \subseteq V$ and $\delta' : V' \to \mathbb{N}$. Then $m_i \leq \delta'(v_i) \leq M_i$ for any $v_i \in V'$ and $(V', \delta') \notin \Upsilon_\omega^{\mathbf{M}}$. So there exists $v_i v_j \in E$ such that $\min\{\delta'(v_i), \delta'(v_j)\} \geq \omega(v_i v_j)$. Then $X_i^{\omega(v_i v_j)} X_j^{\omega(v_i v_j)} \mid X_i^{\delta'(v_i)} X_j^{\delta'(v_j)}$. So $\underline{X}^{(V', \delta')} \in I(G_\omega)$. □

Example .21. Let G_ω be the following weighted graph and $\mathbf{M} = \begin{bmatrix} 1 & 1 \\ 1 & 2 \\ 1 & 2 \end{bmatrix} \in \mathbb{N}_{2\times 3}$.

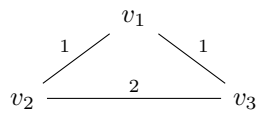

Then

$$\begin{aligned}
\Upsilon_\omega^{\mathbf{M}} &= \{\{v_2^2, v_3\}, \{v_2, v_3^2\}, \{v_2, v_3\}, \{v_2^2\}, \{v_3^2\}, \{v_1\}, \{v_2\}, \{v_3\}, \emptyset\}, \\
J_{\Upsilon_\omega^{\mathbf{M}}} &= (X_1X_2^2X_3^2, X_1X_2^2X_3, X_1X_2X_3^2, X_1X_2X_3, X_2^2X_3^2, X_1X_2^2, X_1X_2, X_1X_3^2, X_1X_3) \\
&= (X_2^2X_3^2, X_1X_2, X_1X_3) \\
&= I(G_\omega).
\end{aligned}$$

Definition .22. A *weighted vertex cover* of G_ω with respect to $\mathbf{M}$ is a weighted vertex cover (V', δ') such that $m_i \leq \delta'(v_i) \leq M_i$ for any $v_i \in V'$. Let $\mathscr{V}_\omega^{\mathbf{M}}$ be the set of weighted vertex cover of G_ω with respect to $\mathbf{M}$.

Lemma .23. Let $\rho = (V', \delta')$. Then $\rho \in \mathscr{V}_\omega$ is minimal if and only if $\rho \in \mathscr{V}_\omega^{\mathbf{M}}$ is minimal.

Proof. "$\Rightarrow$". Assume $\rho \in \mathscr{V}_\omega$ is minimal. Then for each $v_i \in V'$ we have $\delta'(v_i) = \omega(v_iv_j)$ for some $v_iv_j \in E$, so $m_i \leq \delta'(v_i) \leq M_i$. Hence $\rho \in \mathscr{V}_\omega^{\mathbf{M}}$. Since $\mathscr{V}_\omega^{\mathbf{M}} \subseteq \mathscr{V}_\omega$, we have $\rho \in \mathscr{V}_\omega^{\mathbf{M}}$ is minimal.

"$\Leftarrow$". Assume $\rho \in \mathscr{V}_\omega^{\mathbf{M}}$ is minimal. Suppose ρ is not minimal in $\mathscr{V}_\omega$, then there exists $\wp = (V'', \delta'') \in \mathscr{V}_\omega \smallsetminus \mathscr{V}_\omega^{\mathbf{M}}$ such that $\wp$ is minimal in $\mathscr{V}_\omega$ and $\wp < \rho$. Then for each $v_i \in V''$ we have $\delta''(v_i) = \omega(v_iv_j)$ for some $v_iv_j \in E$, so $m_i \leq \delta''(v_i) \leq M_i$. Hence $\wp \in \mathscr{V}_\omega^{\mathbf{M}}$, a contradiction. □

Lemma .24. If $\rho = (V', \delta') \in \Upsilon_\omega^{\mathbf{M}}$, then $((V \smallsetminus V') \sqcup W_\rho^{\mathbf{M}}, \tau_\rho^{\mathbf{M}}) \in \mathscr{V}_\omega^{\mathbf{M}}$.

Proof. We first show that $((V \smallsetminus V') \sqcup W_\rho^{\mathbf{M}}, \tau_\rho^{\mathbf{M}}) \in \mathscr{V}_\omega$. Let $v_iv_j \in E$.

(a) Assume $v_i, v_j \notin (V \smallsetminus V') \sqcup W_\rho^{\mathbf{M}}$. Then $v_i, v_j \in V' \smallsetminus W_\rho^{\mathbf{M}}$. So $\delta'(v_i) = M_i \geq \omega(v_iv_j)$ and $\delta'(v_j) = M_j \geq \omega(v_iv_j)$, implying that $\min\{\delta'(v_i), \delta'(v_j)\} \geq \omega(v_iv_j)$, contradicted by that $\rho \in \Upsilon_\omega^{\mathbf{M}}$.

(b) Assume $v_i, v_j \in (V \smallsetminus V') \sqcup W_\rho^{\mathbf{M}}$. If $v_i \in V \smallsetminus V'$, then $\tau_\rho^{\mathbf{M}}(v_i) = m_i \leq \omega(v_iv_j)$. Without loss of generality, we assume $v_i, v_j \in W_\rho^{\mathbf{M}} \subseteq V'$. Then $\tau_\rho^{\mathbf{M}}(v_i) = \delta'(v_i) + 1$ and $\tau_\rho^{\mathbf{M}}(v_j) = \delta'(v_j) + 1$. Since $\rho \in \Upsilon_\omega^{\mathbf{M}}$ and $v_iv_j \in E$, we have $\min\{\tau_\rho^{\mathbf{M}}(v_i), \tau_\rho^{\mathbf{M}}(v_j)\} = \min\{\delta'(v_i), \delta'(v_j)\} + 1 \leq \omega(v_iv_j)$.

(c) Assume $v_i \in (V \smallsetminus V') \sqcup W_\rho^{\mathbf{M}}$ and $v_j \notin (V \smallsetminus V') \sqcup W_\rho^{\mathbf{M}}$. So $v_j \in V' \smallsetminus W_\rho^{\mathbf{M}}$ and then $\delta'(v_j) = M_j \geq \omega(v_iv_j)$. If $v_i \in V \smallsetminus V'$, then $\tau_\rho^{\mathbf{M}}(v_i) = m_i \leq \omega(v_iv_j)$. Assume now $v_i \in W_\rho^{\mathbf{M}} \subseteq V'$. Since $\rho \in \Upsilon_\omega^{\mathbf{M}}$, we have $\min\{\delta'(v_i), \delta'(v_j)\} < \omega(v_iv_j)$. Also, since $\delta'(v_j) \geq \omega(v_iv_j)$, we have $\delta'(v_i) < \omega(v_iv_j)$. Hence $\tau_\rho^{\mathbf{M}}(v_i) = \delta'(v_i) + 1 \leq \omega(v_iv_j)$.

Hence $((V \smallsetminus V') \sqcup W_\rho^{\mathbf{M}}, \tau_\rho^{\mathbf{M}}) \in \mathscr{V}_\omega$. Let $v_i \in V \smallsetminus V'$, then $\tau_\rho^{\mathbf{M}}(v_i) = m_i$. Let $v_i \in W_\rho^{\mathbf{M}} \subseteq V'$, then $m_i \leq \delta'(v_i) < M_i$, so $m_i + 1 \leq \tau_\rho^{\mathbf{M}}(v_i) = \delta'(v_i) + 1 \leq M_i$. Thus, $((V \smallsetminus V') \sqcup W_\rho^{\mathbf{M}}, \tau_\rho^{\mathbf{M}}) \in \mathscr{V}_\omega^{\mathbf{M}}$. □

Lemma .25. If $\rho = (V', \delta') \in \mathscr{V}_\omega^{\mathbf{M}}$, then $((V \smallsetminus V') \sqcup U_\rho^{\mathbf{M}}, \gamma_\rho^{\mathbf{M}}) \in \Upsilon_\omega^{\mathbf{M}}$.

Proof. We first show that $((V \smallsetminus V') \sqcup U_\rho^{\mathbf{M}}, \gamma_\rho^{\mathbf{M}}) \in \Upsilon_\omega$. Let $v_i, v_j \in (V \smallsetminus V') \sqcup U_\rho^{\mathbf{M}}$ such that $v_iv_j \in E$.

(a) Assume $v_i, v_j \in V \smallsetminus V'$. Since (V', δ') is a weighted vertex cover of G_ω, we have $v_iv_j \notin E$, a contradiction.

(b) Assume $v_i, v_j \in U_\rho^{\mathbf{M}} \subseteq V'$. Then $\gamma_\rho^{\mathbf{M}}(v_i) = \delta'(v_i) - 1 < \delta'(v_i)$ and $\gamma_\rho^{\mathbf{M}}(v_j) = \delta'(v_j) - 1 < \delta'(v_j)$. Since $(V', \delta') \in \mathscr{V}_\omega^{\mathbf{M}}$, we have $\min\{\gamma_\rho^{\mathbf{M}}(v_i), \gamma_\rho^{\mathbf{M}}(v_i)\} < \min\{\delta'(v_i), \delta'(v_j)\} \leq \omega(w_i w_j)$.
(c) Assume $v_i \in V \smallsetminus V'$ and $v_j \in U_\rho^{\mathbf{M}}$. Then $\gamma_\rho^{\mathbf{M}}(v_j) = \delta'(v_j) - 1 < \delta'(v_j)$. Since $\rho \in \mathscr{V}_\omega^{\mathbf{M}}$ and $v_i \notin V'$, we have $\gamma_\rho^{\mathbf{M}}(v_j) < \delta'(v_j) \leq \omega(v_i v_j)$.
Hence $((V \smallsetminus V') \sqcup U_\rho^{\mathbf{M}}, \gamma_\rho^{\mathbf{M}}) \in \Upsilon_\omega$. Let $v_i \in V \smallsetminus V'$. Then $\gamma_\rho^{\mathbf{M}}(v_i) = M_i$. Let $v_i \in U_\rho^{\mathbf{M}} \subseteq V'$, then $m_i < \delta'(v_i) \leq M_i$, so $m_i \leq \gamma_\rho^{\mathbf{M}}(v_i) = \delta'(v_i) - 1 \leq M_i - 1$. Thus, $((V \smallsetminus V') \sqcup U_\rho^{\mathbf{M}}, \gamma_\rho^{\mathbf{M}}) \in \Upsilon_\omega^{\mathbf{M}}$. □

Lemma .26. If $\rho = (V', \delta') \in \Upsilon_\omega^{\mathbf{M}}$ is maximal, then $((V \smallsetminus V') \sqcup W_\rho^{\mathbf{M}}, \tau_\rho^{\mathbf{M}}) \in \mathscr{V}_\omega^{\mathbf{M}}$ is minimal.

Proof. By Lemma .24, it suffices to show the minimality. Suppose it is not minimal. Then we have the following 2 cases.
(a) There exists $v_i \in (V \smallsetminus V') \sqcup W_\rho^{\mathbf{M}}$ such that $\big(((V \smallsetminus V') \sqcup W_\rho^{\mathbf{M}}) \smallsetminus \{v_i\}, \tau_\rho^{\mathbf{M}}|_{((V \smallsetminus V') \sqcup W_\rho^{\mathbf{M}}) \smallsetminus \{v_i\}}\big)$ is a weighted vertex cover of G_ω. Then $\mathrm{N}(v_i) \subseteq (V \smallsetminus V') \sqcup W_\rho^{\mathbf{M}}$ and $\tau_\rho^{\mathbf{M}}(v_j) \leq \omega(v_i v_j)$ for any $v_j \in \mathrm{N}(v_i)$. Let $U_1 = (V \smallsetminus V') \cap \mathrm{N}(v_i)$ and $U_2 = W_\rho^{\mathbf{M}} \cap \mathrm{N}(v_i)$. Then $\mathrm{N}(v_i) = U_1 \sqcup U_2$ and $U_1 \cap V' = \emptyset$. Also, for any $v_j \in U_2$, we have $\delta'(v_j) < \tau_\rho^{\mathbf{M}}(v_j) \leq \omega(v_i v_j)$. If $v_i \in V \smallsetminus V'$, then $(V', \delta') \sqcup \{v_i^{m_i}\} \in \Upsilon_\omega^{\mathbf{M}}$, contradicted by the maximality of (V', δ'). If $v_i \in W_\rho^{\mathbf{M}}$ and $m_i = M_i$, then $\delta'(v_i) < M_i = m_i$, contradicted by that $(V', \delta') \in \Upsilon_\omega^{\mathbf{M}}$. If $v_i \in W_\rho^{\mathbf{M}}$ and $m_i < M_i$, then $m_i < \delta'(v_i) + 1 \leq M_i$, so $(V' \smallsetminus \{v_i\}, \delta'|_{V' \smallsetminus \{v_i\}}) \sqcup \{v_i^{\delta'(v_i)+1}\} \in \Upsilon_\omega^{\mathbf{M}}$, contradicted by the maximality of (V', δ').
(b) There exists $v_i \in (V \smallsetminus V') \sqcup W_\rho^{\mathbf{M}}$ such that $((V \smallsetminus V') \sqcup W_\rho^{\mathbf{M}}, \tau'')$ is a weighted vertex cover of G_ω with $\tau''|_{((V \smallsetminus V') \sqcup W_\rho^{\mathbf{M}}) \smallsetminus \{v_i\}} = \tau_\rho^{\mathbf{M}}|_{((V \smallsetminus V') \sqcup W_\rho^{\mathbf{M}}) \smallsetminus \{v_i\}}$ and $\tau''(v_i) > \tau_\rho^{\mathbf{M}}(v_i)$.
(1) Assume $v_i \in V \smallsetminus V'$. Let $U = \{v_j \in \mathrm{N}(v_i) \mid \omega(v_i v_j) = m_i\}$. Since $\tau''(v_i) > \tau_\rho^{\mathbf{M}}(v_i) = m_i$, we have $\tau_\rho^{\mathbf{M}}(v_j) = \tau''(v_j) \leq \omega(v_i v_j) = m_i$ for any $v_j \in U$. So $U \subseteq (V \smallsetminus V') \sqcup W_\rho^{\mathbf{M}}$. Note that $\delta'(v_j) < \tau_\rho^{\mathbf{M}}(v_j) \leq m_i$ for any $v_j \in U \cap W_\rho^{\mathbf{M}}$, and $v_j \notin V'$ for any $v_j \in U \cap (V \smallsetminus V')$. Since $m_i < \omega(v_i v_j)$ for any $v_j \in \mathrm{N}(v_i) \smallsetminus U$, we have $(V', \delta') \sqcup \{v_i^{m_i}\} \in \Upsilon_\omega^{\mathbf{M}}$, contradicted by the maximality of (V', δ').
(2) Assume $v_i \in W_\rho^{\mathbf{M}}$. Let $U_1 = (V \smallsetminus V') \cap \mathrm{N}(v_i)$ and $U_2 = \{v_j \in W_\rho^{\mathbf{M}} \mid \tau''(v_i) > \omega(v_i v_j)\} \cap \mathrm{N}(v_i)$. Then we have $U_1 \cap V' = \emptyset$, and $\delta'(v_j) < \tau_\rho^{\mathbf{M}}(v_j) = \tau''(v_j) \leq \omega(v_i v_j)$ for any $v_j \in U_2$. Let $U_3 = \{v_j \in W_\rho^{\mathbf{M}} \mid \tau''(v_i) \leq \omega(v_i v_j)\} \cap \mathrm{N}(v_i)$. Then $\delta'(v_i) < \tau_\rho^{\mathbf{M}}(v_i) < \tau''(v_i) \leq \omega(v_i v_j)$ for any $v_j \in U_3$. Let $U_4 = (V' \smallsetminus W_\rho^{\mathbf{M}}) \cap \mathrm{N}(v_i)$. For any $v_j \in U_4$, since $v_j \notin (V \smallsetminus V') \sqcup W_\rho^{\mathbf{M}}$, we have $\delta'(v_i) < \tau_\rho^{\mathbf{M}}(v_i) < \tau''(v_i) \leq \omega(v_i v_j)$. Note that

$$U_1 \sqcup (U_2 \sqcup U_3) \sqcup U_4 = ((V \smallsetminus V') \sqcup W_\rho^{\mathbf{M}} \sqcup (V' \smallsetminus W_\rho^{\mathbf{M}})) \cap \mathrm{N}(v_i) = V \cap \mathrm{N}(v_i) = \mathrm{N}(v_i).$$

Note also that $\delta'(v_i) + 1 < \omega(v_i v_j) \leq M_i$ for any $v_j \in U_3 \sqcup U_4$. If $m_i = M_i$, then $\delta'(v_i) < M_i = m_i$, contradicted by that $(V', \delta') \in \Upsilon_\omega^{\mathbf{M}}$. If $m_i + 1 = M_i$, then $m_i \leq \delta'(v_i) < \tau_\rho^{M}(v_i) < \tau''(v_i) \leq \omega(v_i v_j) \leq m_i + 1$ for any $v_i \in U_3 \sqcup U_4$, so $U_3 \sqcup U_4 = \emptyset$, then since $m_i + 1 \leq \delta'(v_i) + 1 \leq M_i$, we have $(V' \smallsetminus \{v_i\}, \delta'|_{V' \smallsetminus \{v_i\}}) \sqcup \{v_i^{\delta'(v_i)+1}\} \in \Upsilon_\omega^{\mathbf{M}}$, contradicted by the maximality of (V', δ'). If $m_i + 2 \leq M_i$, then $m_i + 1 \leq \delta'(v_i) + 1 \leq M_i$, so $(V' \smallsetminus \{v_i\}, \delta'|_{V' \smallsetminus \{v_i\}}) \sqcup \{v_i^{\delta'(v_i)+1}\} \in \Upsilon_\omega^{\mathbf{M}}$, contradicted by the maximality of (V', δ'). □

Lemma .27. If $\rho = (V', \delta') \in \mathscr{V}_\omega^{\mathbf{M}}$ is minimal, then $((V \smallsetminus V') \sqcup U_\rho^{\mathbf{M}}, \gamma_\rho^{\mathbf{M}}) \in \Upsilon_\omega^{\mathbf{M}}$ is maximal.

Proof. By Lemma .25, it suffices to show the maximality. Suppose it is not maximal. Then by Lemma .23 it is equavilent to show that ρ is not minimal in $\mathscr{V}_\omega$. Then we have the following 2 cases.

(a) There exists $v_i \in V \smallsetminus ((V \smallsetminus V') \sqcup U_\rho^{\mathbf{M}}) = V' \smallsetminus U_\rho^{\mathbf{M}}$ such that $((V \smallsetminus V') \sqcup U_\rho^{\mathbf{M}} \sqcup \{v_i\}, \gamma'') \in \Upsilon_\omega^{\mathbf{M}}$ with $\gamma''|_{(V \smallsetminus V') \sqcup U_\rho^{\mathbf{M}}} = \gamma_\rho^{\mathbf{M}}$. Then $\delta'(v_i) = m_i$. Let $U_1 = \{v_j \in (V \smallsetminus V') \sqcup U_\rho^{\mathbf{M}} \mid \omega(v_i v_j) = m_i\} \cap \mathrm{N}(v_i)$. Then $\gamma_\rho''(v_i) \geq m_i = \omega(v_i v_j)$ for any $v_j \in U_1$. So $\gamma_\rho'(v_j) = \gamma_\rho''(v_j) < \omega(v_i v_j) \leq M_j$ for any $v_j \in U_1$. Hence $v_j \notin V \smallsetminus V'$ for any $v_j \in U_1$, and $\delta'(v_j) = \gamma_\rho'(v_j) + 1 \leq \omega(v_i v_j)$ for any $v_j \in U_1$. Let $U_2 = \{v_j \in V' \smallsetminus U_\rho^{\mathbf{M}} \mid \omega(v_i v_j) = m_i\} \cap \mathrm{N}(v_i)$. Then $\delta'(v_j) = m_j \leq \omega(v_i v_j)$ for any $v_j \in U_2$. Note that $U_1 \sqcup U_2 = \{v_j \in \mathrm{N}(v_i) \mid \omega(v_i v_j) = m_i\}$. Then $(V' \smallsetminus \{v_i\}, \delta'|_{V' \smallsetminus \{v_i\}}) \sqcup \{v_i^{m_i+1}\}$ is a weighted vector cover of G_ω, contradicted by the minimality of (V', δ').
(b) There exists $v_i \in (V \smallsetminus V') \sqcup U_\rho^{\mathbf{M}}$ such that $((V \smallsetminus V') \sqcup U_\rho^{\mathbf{M}}, \gamma'') \in \Upsilon_\omega^{\mathbf{M}}$ with $\gamma''(v_i) > \gamma_\rho^{\mathbf{M}}(v_i)$ and $\gamma''|_{((V \smallsetminus V') \sqcup U_\rho^{\mathbf{M}}) \smallsetminus \{v_i\}} = \gamma_\rho^{\mathbf{M}}|_{((V \smallsetminus V') \sqcup U_\rho^{\mathbf{M}}) \smallsetminus \{v_i\}}$. Let $U_1 = \{v_j \in (V \smallsetminus V') \sqcup U_\rho^{\mathbf{M}} \mid \gamma''(v_i) \geq \omega(v_i v_j)\} \cap \mathrm{N}(v_i)$. Then $\gamma_\rho^{\mathbf{M}}(v_j) = \gamma''(v_j) < \omega(v_i v_j) \leq M_i$ for any $v_j \in U_1$. So for any $v_j \in U_1$ we have $v_j \notin V \smallsetminus V'$ and then $\delta'(v_j) = \gamma_\rho^{\mathbf{M}}(v_j) + 1 \leq \omega(v_i v_j)$. Let $U_2 = \{v_j \in (V \smallsetminus V') \sqcup U_\rho^{\mathbf{M}} \mid \gamma''(v_i) < \omega(v_i v_j)\} \cap \mathrm{N}(v_i)$. Then $\gamma_\rho^{\mathbf{M}}(v_i) < \gamma''(v_i) < \omega(v_i v_j) \leq M_i$ for any $v_j \in U_2$. So $v_i \notin (V \smallsetminus V')$. Then $\delta'(v_i) = \gamma_\rho^{\mathbf{M}}(v_i) + 1 \leq \gamma''(v_i) < \omega(v_i v_j)$ for any $v_j \in U_2$. Let $U_3 = (V' \smallsetminus U_\rho^{\mathbf{M}}) \cap \mathrm{N}(v_i)$. Then $\delta'(v_j) = m_i \leq \omega(v_i v_j)$ for any $v_j \in U_3$. Note that $U_1 \sqcup U_2 \sqcup U_3 = \mathrm{N}(v_i)$. So $(V' \smallsetminus \{v_i\}, \delta'|_{V' \smallsetminus \{v_i\}}) \sqcup \{v_i^{\delta'(v_i)+1}\}$ is a weighted vertex cover of G_ω, contradicted by the minimality of (V', δ'). □

The next result shows that the weighted independence sets in G_ω with respect to $\mathbf{M}$ are in bijection with the weighted vertex covers of G_ω with respect to $\mathbf{M}$, and the maximal weighted independence sets in G_ω with respect to $\mathbf{M}$ are in bijection with the minimal weighted vertex covers of G_ω with respect to $\mathbf{M}$.

Lemma .28. Let $\rho = (V', \delta')$ be with $V' \subseteq V$ and $\delta' : V' \to \mathbb{N}$ such that $m_i \leq \delta'(v_i) \leq M_i$ for any $v_i \in V'$,
(a) $\rho \in \Upsilon_\omega^{\mathbf{M}}$ (is maximal) if and only if $\wp := ((V \smallsetminus V') \sqcup W_\rho^{\mathbf{M}}, \tau_\rho^{\mathbf{M}}) \in \mathscr{V}_\omega^{\mathbf{M}}$ (is minimal).
(b) $\rho \in \mathscr{V}_\omega^{\mathbf{M}}$ is minimal if and only if $\wp := ((V \smallsetminus V') \sqcup U_\rho^{\mathbf{M}}, \gamma_\rho^{\mathbf{M}}) \in \Upsilon_\omega^{\mathbf{M}}$ (is maximal).

Proof. (a) "$\Rightarrow$" follows from Lemma .24 and .26.
"$\Leftarrow$". Assume $\wp \in \mathscr{V}_\omega^{\mathbf{M}}$ (is minimal). Then by definition

$$W_\rho^{\mathbf{M}} = \{v_i \in (V \smallsetminus V') \sqcup W_\rho^{\mathbf{M}} \mid \tau_\rho^{\mathbf{M}}(v_i) > m_i\} = U_\wp^{\mathbf{M}}.$$

So

$$\gamma_\wp^{\mathbf{M}}(v_i) = \begin{cases} M_i = \delta'(v_i) & \text{if } v_i \in V \smallsetminus ((V \smallsetminus V') \sqcup W_\rho^{\mathbf{M}}) = V' \smallsetminus W_\rho^{\mathbf{M}}, \\ \tau_\rho^{\mathbf{M}}(v_i) - 1 = \delta'(v_i) & \text{if } v_i \in U_\wp^{\mathbf{M}} = W_\rho^{\mathbf{M}}. \end{cases}$$

Hence $\gamma_\wp^{\mathbf{M}} = \delta'$. So $(V', \delta') = ((V' \smallsetminus W_\rho^{\mathbf{M}}) \sqcup U_\wp^{\mathbf{M}}, \gamma_\wp^{\mathbf{M}}) = ((V \smallsetminus ((V \smallsetminus V') \sqcup W_\rho^{\mathbf{M}})) \sqcup U_\wp^{\mathbf{M}}, \gamma_\wp^{\mathbf{M}}) \in \Upsilon_\omega^{\mathbf{M}}$ (is maximal) by Lemma .25 and .27.
(b) "$\Rightarrow$" follows from Lemma .25 and .27.
"$\Leftarrow$". Assume $\wp \in \Upsilon_\omega^{\mathbf{M}}$ (is maximal). Then by definition

$$U_\rho^{\mathbf{M}} = \{v_i \in (V \smallsetminus V') \sqcup U_\rho^{\mathbf{M}} \mid \gamma_\rho^{\mathbf{M}}(v_i) < M_i\} = W_\wp^{\mathbf{M}}.$$

So

$$\tau_\wp^{\mathbf{M}}(v_i) = \begin{cases} m_i = \delta'(v_i) & \text{if } v_i \in V \smallsetminus ((V \smallsetminus V') \sqcup U_\rho^{\mathbf{M}}) = V' \smallsetminus U_\rho^{\mathbf{M}}, \\ \gamma_\rho^{\mathbf{M}}(v_i) + 1 = \delta'(v_i) & \text{if } v_i \in W_\wp^{\mathbf{M}} = U_\rho^{\mathbf{M}}. \end{cases}$$

Hence $\tau_\wp^{\mathbf{M}} = \delta'$. So $(V', \delta') = ((V' \smallsetminus U_\rho^{\mathbf{M}}) \sqcup W_\wp^{\mathbf{M}}, \tau_\wp^{\mathbf{M}}) = ((V \smallsetminus ((V \smallsetminus V') \sqcup U_\rho^{\mathbf{M}})) \sqcup W_\wp^{\mathbf{M}}, \tau_\wp^{\mathbf{M}}) \in \mathscr{V}_\omega^{\mathbf{M}}$ (is minimal) by Lemma .24 and .26. □

Example .29. Consider the weighted graph from Example .21. The weighted independence sets and weighted vertex covers are listed in the first and second row respectively, and the underlined sets are maximal ones and minimal ones, respectively.

$\underline{\{v_2^2, v_3\}}$	$\underline{\{v_2, v_3^2\}}$	$\{v_2, v_3\}$	$\{v_2^2\}$	$\{v_3^2\}$	$\underline{\{v_1\}}$	$\{v_2\}$	$\{v_3\}$	$\emptyset$
$\underline{\{v_1, v_3^2\}}$	$\underline{\{v_1, v_2^2\}}$	$\{v_1, v_2^2, v_3^2\}$	$\{v_1, v_3\}$	$\{v_1, v_2\}$	$\underline{\{v_2, v_3\}}$	$\{v_1, v_2^2, v_3\}$	$\{v_1, v_2, v_3^2\}$	$\{v_1, v_2, v_3\}$

Let $\rho = (V', \delta') = \{v_2^1\} \in \Upsilon_\omega^{\mathbf{M}}$. Then $W_\rho^{\mathbf{M}} = \{v_i \in V' \mid \delta'(v_i) < M_i\} = \{v_2\}$ and $\tau_\rho^{\mathbf{M}}(v_2) = \delta'(v_2) + 1 = 2$. Since $V \smallsetminus V' = \{v_1, v_3\}$, we have $\tau_\rho^{\mathbf{M}}(v_1) = 1$ and $\tau_\rho^{\mathbf{M}}(v_3) = 1$. So $((V \smallsetminus V') \sqcup W_\rho^{\mathbf{M}}, \tau_\rho^{\mathbf{M}}) = \{v_1, v_2^2, v_3\}$ is a weighted vertex cover of G_ω.

On the other hand, let $\wp = (V'', \delta'') = \{v_2, v_2^2, v_3\}$, a weighted vertex cover of G_ω. Then $U_\wp^{\mathbf{M}} = \{v_i \in V'' \mid \delta''(v_i) > 1\} = \{v_2\}$ and $\gamma_\wp^{\mathbf{M}}(v_2) = \delta'(v_2) - 1 = 1$. Since $V \smallsetminus V' = \emptyset$, we have $((V \smallsetminus' V') \sqcup U_\wp^{\mathbf{M}}, \gamma_\wp^{\mathbf{M}}) = \{v_2^1\} \in \Upsilon_\omega^{\mathbf{M}}$.

Example .30. The minimal weighted vertex covers of G_ω with respect to $\mathbf{M} = \begin{bmatrix} 1 & 1 & 2 & 3 & 2 & 4 \\ 4 & 3 & 5 & 4 & 3 & 5 \end{bmatrix}$:

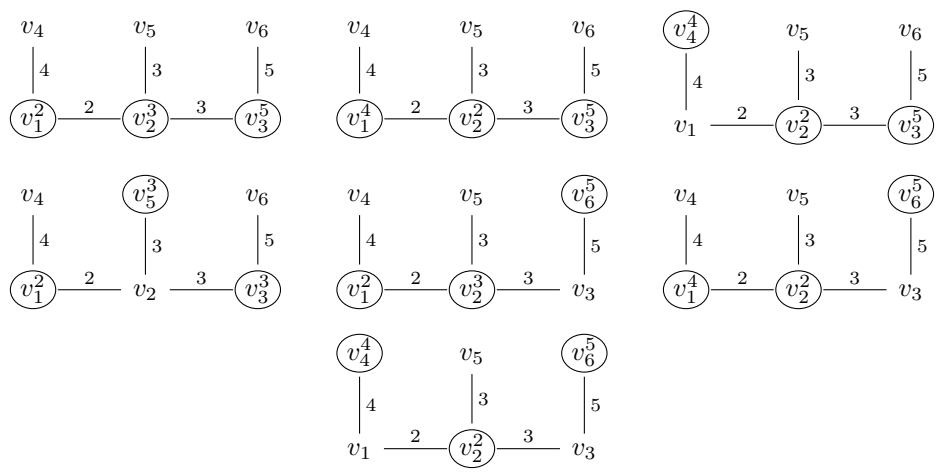

The corresponding maximal weighted independence sets with respect to $\mathbf{M}$:

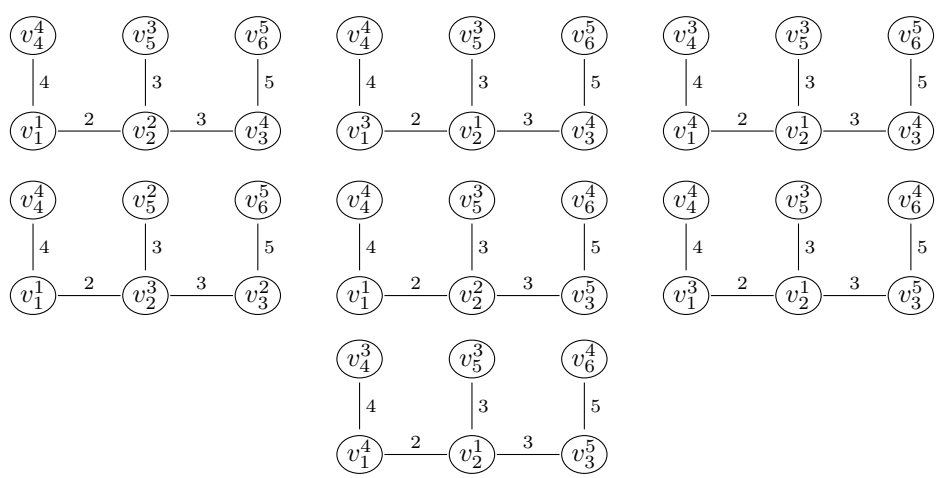

If $\mathbf{M} = \begin{bmatrix} 2 & 2 & 3 & 4 & 3 & 5 \\ 4 & 3 & 5 & 4 & 3 & 5 \end{bmatrix}$, then weighted vertex covers of G_ω with respect to $\mathbf{M}$ are the same and the corresponding weighted independence sets with respect $\mathbf{M}$ are

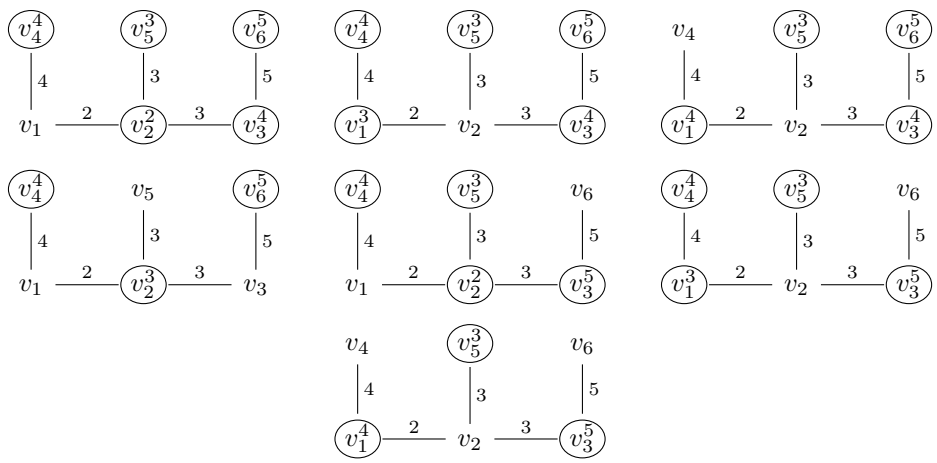

Theorem .31. *The ideal $J_{\Upsilon_\omega^{\mathbf{M}}}$ has the following irreducible decompositions*

$$I(G_\omega) = \bigcap_{\rho \in \Upsilon_\omega^{\mathbf{M}}} Q_\rho^{\mathbf{M}} = \bigcap_{\textit{maximal } \rho \in \Upsilon_\omega^{\mathbf{M}}} Q_\rho^{\mathbf{M}}.$$

The second intersection is irredundant.

Proof. It follows from Υ_ω is a generalized ℕ-weighted simplicial complex, along with Theorem .20 and .16. □

Remark. Here we give another proof for Theorem .31.

Proof. By [**?**, Proposition 1.12] and Lemma .23, for every $(V', \delta') \in \mathscr{V}_\omega^{\mathbf{M}}$ there exists minimal $(V'', \delta'') \in \mathscr{V}_\omega$ such that $(V'', \delta'') \leq (V', \delta')$. Then by [**?**, Proposition 3.3],

$$\bigcap_{(V',\delta') \in \mathscr{V}_\omega^{\mathbf{M}}} P(V', \delta') \supseteq \bigcap_{\text{minimal } (V',\delta') \in \mathscr{V}_\omega} P(V', \delta').$$

By Lemma .23 we have

$$\bigcap_{(V',\delta') \in \mathscr{V}_\omega^{\mathbf{M}}} P(V', \delta') \subseteq \bigcap_{\text{minimal } (V',\delta') \in \mathscr{V}_\omega^{\mathbf{M}}} P(V', \delta') = \bigcap_{\text{minimal } (V',\delta') \in \mathscr{V}_\omega} P(V', \delta').$$

Then by [**?**, Theorem 3.5]

$$I(G_\omega) = \bigcap_{\text{minimal } (V',\delta') \in \mathscr{V}_\omega} P(V', \delta') = \bigcap_{(V',\delta') \in \mathscr{V}_\omega^{\mathbf{M}}} P(V', \delta').$$

Define $f : \Upsilon_\omega^{\mathbf{M}} \to \mathscr{V}_\omega^{\mathbf{M}}$ and $g : \mathscr{V}_\omega^{\mathbf{M}} \to \Upsilon_\omega^{\mathbf{M}}$ by

$$\Upsilon_\omega^{\mathbf{M}} \longleftrightarrow \mathscr{V}_\omega^{\mathbf{M}}$$

$$\rho := (V', \delta') \xmapsto{f} ((V \smallsetminus V') \sqcup W_\rho^{\mathbf{M}}, \tau_\rho^{\mathbf{M}})$$

$$((V \smallsetminus \{V''\}) \sqcup U_\rho^{\mathbf{M}}, \gamma_\wp^{\mathbf{M}}) \xleftarrow{g} (V'', \delta'') =: \wp.$$

Then $g \circ f = \mathrm{id}_{\Upsilon_\omega^{\mathbf{M}}}$ by the proof of Lemma .28(a), $f \circ g = \mathrm{id}_{\mathscr{V}_\omega^{\mathbf{M}}}$ by the proof of Lemma .28(b). So $f : \Upsilon_\omega^{\mathbf{M}} \to \mathscr{V}_\omega^{\mathbf{M}}$ is a bijection with inverse $f^{-1} = g$. Hence

$$\begin{aligned} I(G_\omega) &= \bigcap_{(V'',\delta'')\in\mathscr{V}_\omega^{\mathbf{M}}} P(V'',\delta'') \\ &= \bigcap_{(V,\delta')\in\Upsilon_\omega^{\mathbf{M}}} P(f(V',\delta')) \\ &= \bigcap_{\rho:=(V',\delta')\in\Upsilon_\omega^{\mathbf{M}}} P((V\smallsetminus V')\sqcup W_\rho^{\mathbf{M}},\tau_\rho^{\mathbf{M}})) \\ &= \bigcap_{\rho\in\Upsilon_\omega^{\mathbf{M}}} Q_\rho^{\mathbf{M}}. \end{aligned}$$

Use the same method and with Lemma .23 we have

$$I(G_\omega) = \bigcap_{\text{minimal } (V'',\delta'')\in\mathscr{V}_\omega} P(V'',\delta'') = \bigcap_{\text{minimal } (V'',\delta'')\in\mathscr{V}_\omega^{\mathbf{M}}} P(V'',\delta'') = \bigcap_{\text{maximal } \rho\in\Upsilon_\omega^{\mathbf{M}}} Q_\rho^{\mathbf{M}}. \qquad \square$$

Example .32. Consider the weighted graph from Example .21. Example .29 The facets of $\Upsilon_\omega^{\mathbf{M}}$ are $\{v_2^2, v_3\}$, $\{v_2, v_3^2\}$ and $\{v_1\}$. The minimal weighted vertex covers are $\{v_1, v_3^2\}$, $\{v_1, v_2^2\}$ and $\{v_2, v_3\}$. By Theorem .31 we have

$$\begin{aligned} I(G_\omega) &= \bigcap_{\rho\in\Upsilon_\omega^{\mathbf{M}}} Q_\rho^{\mathbf{M}} \\ &= (X_1, X_3^2)R \cap (X_1, X_2^2)R \cap (X_1, X_2^2, X_3^2)R \cap (X_1, X_3)R \\ &\quad \cap (X_2, X_3)R \cap (X_1, X_2^2, X_3)R \cap (X_1, X_2, X_3^2)R \cap (X_1, X_2, X_3)R \\ &= (X_1, X_3^2) \cap (X_1, X_2^2) \cap (X_2, X_3)R \\ &= \bigcap_{\text{maximal } \rho\in\Upsilon_\omega^{\mathbf{M}}} Q_\rho^{\mathbf{M}}. \end{aligned}$$

2. Alexander dual of a generator weighted simplicial complex with repsect to $\mathbf{M}$

In this section, let $\mathbf{M} \in \mathbb{N}_{2\times d}$ a matrix whose i^{th} row is $[m_i\ M_i]$ satisfying that $m_i \le M_i$ for $i = 1, \dots, d$. Let $\Upsilon^{\mathbf{M}}$ be a weighted simplicial complex with respect to $\mathbf{M}$. Assume $I \subseteq k[X_1, \dots, X_d]$ is a monomial ideal and the power of the variable x_i takes values in $[m_i, M_i]$ for $i = 1, \dots, d$.

Definition .33.

$$\Upsilon(I) = \{(V',\delta') \text{ with } V' \subseteq V \text{ and } \delta' : V' \to \mathbb{N} \mid \underline{X}^{(V',\delta')} \notin I\}.$$

$$J_\Upsilon = \{X^{(V',\delta')} \text{ with } V' \subseteq V \text{ and } \delta' : V' \to \mathbb{N} \mid (V',\delta') \notin \Upsilon\}.$$

Theorem .34. *We have $J_{\Upsilon(I)} = I$ and $\Upsilon(J_\Upsilon) = \Upsilon$.*

Definition .35. Define the *Alexander dual* of $\Upsilon^{\mathbf{M}}$ by

$$(\Upsilon^{\mathbf{M}})^\vee = \{\rho := (V',\delta') \text{ with } V' \subseteq V,\ \delta' : V' \to \mathbb{N}, \text{ and } m_i \le \delta'(v_i) \mid ((V\smallsetminus V')\sqcup W_\rho^{\mathbf{M}}, \varphi_\rho^{\mathbf{M}}) \notin \Upsilon^{\mathbf{M}}\}.$$

Then $(\Upsilon^{\mathbf{M}})^\vee$ is a weighted simplicial complex with respect to $\mathbf{M}$ closed under "$\preccurlyeq$".

Example .36. Let $\begin{bmatrix} 1 & 1 \\ 1 & 2 \\ 1 & 2 \\ 1 & 1 \end{bmatrix} \in \mathbb{N}_{2\times 4}$.

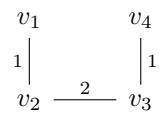

Then the facets of $(\Upsilon_\omega^M)^\vee$ are $\{v_1, v_4\}$, $\{v_1, v_2^2, v_3\}$ and $\{v_2, v_3^2, v_4\}$. So

$$J_{(\Upsilon_\omega^{\mathbf{M}})^\vee} = (X_1X_3^2, X_2^2X_4, X_2^2X_3^2, X_1X_2X_4, X_2X_3X_4)R = (X_1, X_2^2)R \cap (X_2, X_3)R \cap (X_3^2, X_4)R.$$

By Ezra Miller, we have

$$(J_{\Upsilon_\omega^{\mathbf{M}}})^\vee = I(G_\omega)^\vee = (X_1X_3^2, X_2^2X_4, X_2^2X_3^2, X_1X_2X_4, X_1X_3X_4)R = (X_1, X_2^2) \cap (X_2, X_3) \cap (X_3^2, X_4).$$

Example .37. Let $\begin{bmatrix} 2 & 2 \\ 1 & 2 \\ 1 & 2 \\ 2 & 2 \end{bmatrix} \in \mathbb{N}_{2\times 4}$.

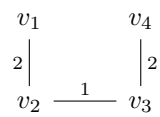

Then the facets of $(\Upsilon_\omega^M)^\vee$ are $\{v_1^2, v_2, v_3, v_4^2\}$, $\{v_1^2, v_2^2\}$ and $\{v_3^2, v_4^2\}$.

$$J_{(\Upsilon_\omega^{\mathbf{M}})^\vee} = (X_2^2X_3, X_2X_3^2, X_1X_3^2, X_2^2X_4)R = (X_1, X_2^2)R \cap (X_2, X_3)R \cap (X_3^2, X_4)R.$$

By Ezra Miller, we have

$$(J_{\Upsilon_\omega^{\mathbf{M}}})^\vee = I(G_\omega)^\vee = (X_1X_3^2, X_2^2X_4, X_2^2X_3^2, X_1X_2X_4, X_1X_3X_4)R = (X_1, X_2^2) \cap (X_2, X_3) \cap (X_3^2, X_4).$$

Definition .38. Assume the variable x_i in the minimal generators of I takes values in $[m_i, M_i]$ for $i = 1, \ldots, d$. Write $I = \bigcap_{i=1}^n P(V_i', \delta_i')$ as a irredundant irreducible decomposition. Define the *Alexander dual* of I by

$$I^\vee = (\underline{X}^{(V_i', \delta_i'')} \mid i = 1, \ldots, n),$$

where for $i = 1, \ldots, n$: $\delta_i''(v_j) = M_j + m_j - \delta_i'(v_j)$ for any $v_j \in V_i'$.

Remark. $I^\vee$ is well-defined since for $i = 1, \ldots, n$: $V' \subseteq V$, $m_j \leq \delta_i'(v_j) \leq M_j$ for any $v_j \in V_i'$.

Conjecture .39.

$$I^{\vee\vee} = I.$$

We justify this name by showing that Alexander duality commutes with the weighted Stanley Reisner correspondence.

Conjecture .40. For $j = 1, \ldots, d$, let M_j be the exponent on the least common multiple of the minimal generators of I and m_j be the exponent on the greatest common divisor of the minimal generators of I. Then

$$\Upsilon_{I^\vee}^{\mathbf{M}} = (\Upsilon_I^{\mathbf{M}})^\vee.$$

Theorem .41.

$$(J_{\Upsilon^{\mathbf{M}}})^\vee = J_{(\Upsilon^{\mathbf{M}})^\vee}.$$

Proof. We have $J_{\Upsilon^{\mathbf{M}}} = \bigcap_{\rho\in\Upsilon^{\mathbf{M}}} Q_\rho^{\mathbf{M}} = \bigcap_{\rho\in\Upsilon^{\mathbf{M}}} P((V\smallsetminus V')\sqcup W_\rho^{\mathbf{M}}, \tau_\rho^{\mathbf{M}})$ by Theorem .16. Then

$$(J_{\Upsilon^{\mathbf{M}}})^\vee = (\underline{X}^{((V\smallsetminus V')\sqcup W_\rho^{\mathbf{M}},\delta'')} \mid \rho := (V',\delta') \in \Upsilon^{\mathbf{M}}),$$

where $\delta''(v_i) = M_i + m_i - \tau_\rho^{\mathbf{M}}(v_i) = M_i + m_i - \delta'(v_i) - 1$ for any $v_i \in W_\rho^{\mathbf{M}}$.

"$\subseteq$". Let $\underline{X}^{((V\smallsetminus V')\sqcup W_\rho^{\mathbf{M}},\delta'')} \in (J_{\Upsilon^{\mathbf{M}}})^\vee$ be a generator with $\rho := (V',\delta') \in \Upsilon^{\mathbf{M}}$. Let $\wp := ((V\smallsetminus V')\sqcup W_\rho^{\mathbf{M}},\delta'')$. Then $W_\wp^{\mathbf{M}} = \{v_i \in (V\smallsetminus V')\sqcup W_\rho^{\mathbf{M}} \mid \delta''(v_i) < M_i\} = W_\rho^{\mathbf{M}}$ and

$$\varphi_\wp^{\mathbf{M}}(v_i) = \begin{cases} M_i = \delta'(v_i) & \text{if } v_i \in V'\smallsetminus W_\wp^{\mathbf{M}}, \\ M_i + m_i - \delta''(v_i) - 1 = \delta'(v_i) & \text{if } v_i \in W_\wp^{\mathbf{M}} = W_\rho^{\mathbf{M}}. \end{cases}$$

So $((V'\smallsetminus W_\rho^{\mathbf{M}})\sqcup W_\wp^{\mathbf{M}}, \varphi_\wp^{\mathbf{M}}) = (V',\delta') \in \Upsilon^{\mathbf{M}}$. So $\wp \notin (\Upsilon^{\mathbf{M}})^\vee$. Also, since $\delta''(v_i) = M_i + m_i - \tau_\rho^{\mathbf{M}}(v_i) = M_i + m_i - m_i = M_i$ for any $v_i \in V\smallsetminus V'$ and $m_i \le \delta''(v_i) \le M_i - 1$ for any $v_i \in W_\rho^{\mathbf{M}}$, we have $\wp \in J_{(\Upsilon^{\mathbf{M}})^\vee}$.

"$\supseteq$". Let $\wp := (V''',\delta''') \in J_{(\Upsilon^{\mathbf{M}})^\vee}$ be a generator. Then $\wp \notin (\Upsilon^{\mathbf{M}})^\vee$ and $m_i \le \delta'''(v_i) \le M_i$ for any $v_i \in V'''$. So $\rho := ((V\smallsetminus V''')\sqcup W_\wp^{\mathbf{M}}, \varphi_\wp^{\mathbf{M}}) \in \Upsilon^{\mathbf{M}}$. So $W_\rho^{\mathbf{M}} = \{v_i \in (V\smallsetminus V''')\sqcup W_\wp^{\mathbf{M}} \mid \varphi_\wp^{\mathbf{M}}(v_i) < M_i\} = W_\wp^{\mathbf{M}}$. Define $\delta'' : V''' = (V\smallsetminus((V\smallsetminus V''')\sqcup W_\wp^{\mathbf{M}}))\sqcup W_\rho^{\mathbf{M}} \to \mathbb{N}$ by

$$\delta''(v_i) = M_i + m_i - \tau_\rho^{\mathbf{M}}(v_i) = \begin{cases} M_i + m_i - m_i = M_i = \delta'''(v_i) & \text{if } v_i \in V'''\smallsetminus W_\wp^{\mathbf{M}}, \\ M_i + m_i - \varphi_\wp^{\mathbf{M}}(v_i) - 1 = \delta'''(v_i) & \text{if } v_i \in W_\wp^{\mathbf{M}}, \end{cases}$$

we have $\delta'' = \delta'''$. So $\underline{X}^{(V''',\delta''')} = \underline{X}^{(V''',\delta'')} \in (J_{\Upsilon^{\mathbf{M}}})^\vee$. $\square$

Email address: wei6@clemson.edu

School of Mathematical and Statistical Sciences, Clemson University, E-008 Martin Hall, Box 340975, Clemson, SC 29634, USA

School of Mathematical and Statistical Sciences, Clemson University, O-110 Martin Hall, Box 340975, Clemson, SC 29634, USA

Email address: ssather@clemson.edu