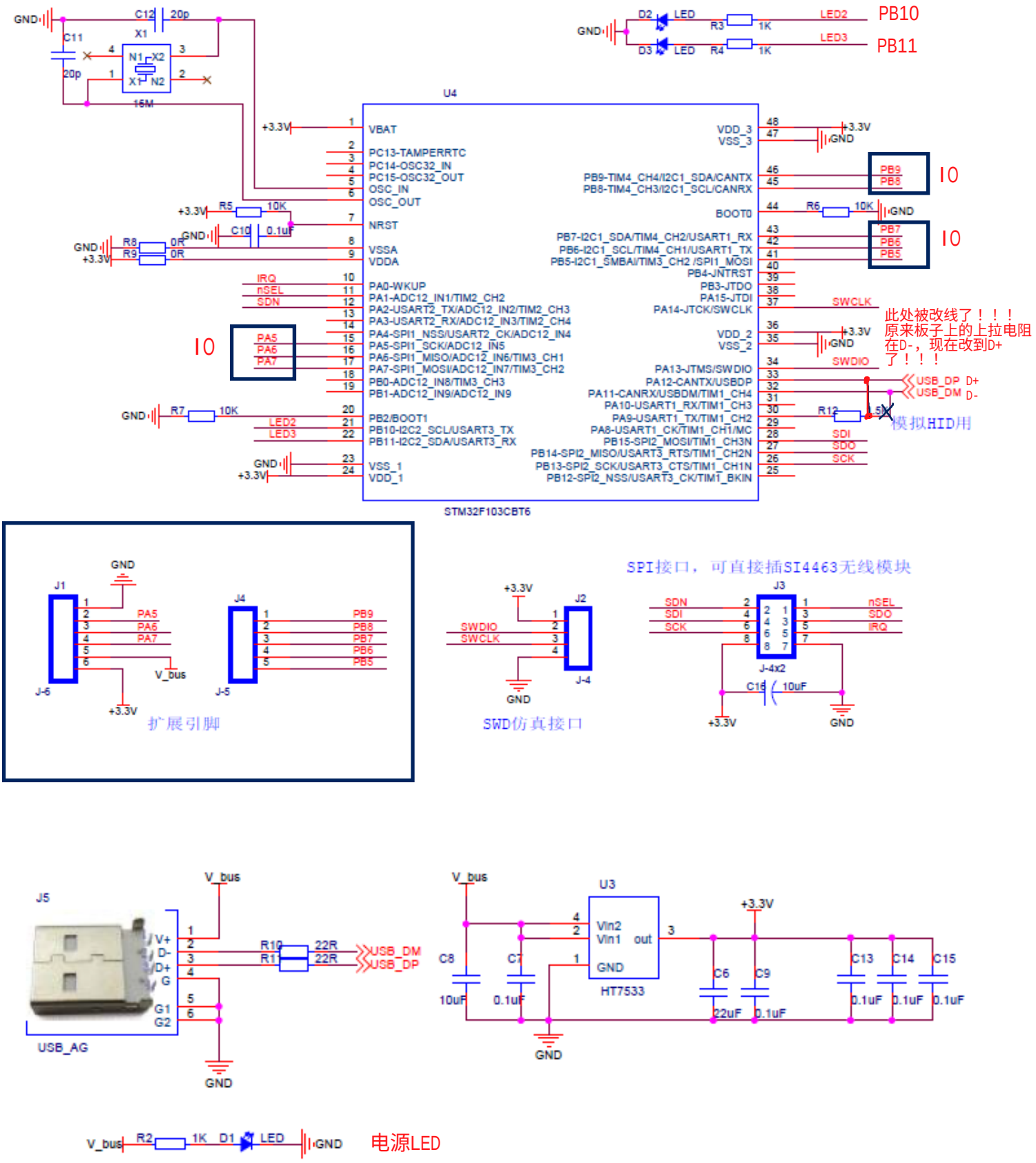
U4
STM32F103CBT6
VBAT
PC13-TAMPERRTC
PC14-OSC32_IN
PC15-OSC32_OUT
OSC_IN
OSC_OUT
NRST
VSSA
VDDA
PA0-WKUP
PA1-ADC12_IN1/TIM2_CH2
PA2-USART2_TX/ADC12_IN2/TIM2_CH3
PA3-USART2_RX/ADC12_IN3/TIM2_CH4
PA4-SPI1_NSS/USART2_CK/ADC12_IN4
PA5-SPI1_SCK/ADC12_IN5
PA6-SPI1_MISO/ADC12_IN6/TIM3_CH1
PA7-SPI1_MOSI/ADC12_IN7/TIM3_CH2
PB0-ADC12_IN8/TIM3_CH3
PB1-ADC12_IN9/ADC12_IN9
PB2/BOOT1
PB10-I2C2_SCL/USART3_TX
PB11-I2C2_SDA/USART3_RX
VSS_1
VDD_1
VDD_3
VSS_3
PB9-TIM4_CH4/I2C1_SDA/CANTX
PB8-TIM4_CH3/I2C1_SCL/CANRX
BOOT0
PB7-I2C1_SDA/TIM4_CH2/USART1_RX
PB6-I2C1_SCL/TIM4_CH1/USART1_TX
PB5-I2C1_SMBAI/TIM3_CH2 /SPI1_MOSI
PB4-JNTRST
PB3-JTDO
PA15-JTDI
PA14-JTCK/SWCLK
VDD_2
VSS_2
PA13-JTMS/SWDIO
PA12-CANTX/USBDP
PA11-CANRX/USBDM/TIM1_CH4
PA10-USART1_RX/TIM1_CH3
PA9-USART1_TX/TIM1_CH2
PA8-USART1_CK/TIM1_CH1/MC
PB15-SPI2_MOSI/TIM1_CH3N
PB14-SPI2_MISO/USART3_RTS/TIM1_CH2N
PB13-SPI2_SCK/USART3_CTS/TIM1_CH1N
PB12-SPI2_NSS/USART3_CK/TIM1_BKIN
PB10
PB11
IO
此处被改线了！！！
原来板子上的上拉电阻
在D-，现在改到D+
了！！！
模拟HID用
SPI接口，可直接插SI4463无线模块
扩展引脚
SWD仿真接口
J-6
J-5
J-4
J-4x2
USB_AG
HT7533
电源LED