radxa

Radxa CM3 IO schematic

V1.36

Table of Content

01.cover
02.Index
03.Block_Diagram
04.HDMI0 OUT
05.Ethernet
06.MicroSD Card
07.PCIE2.0
08.AUDIO
09.LCD_eDP TX
10.MIPI_LCD_TX0
11.MIPI_CSI_RX
12.USB OTG/ HUB
13.USB HOST
14.FAN_RTC_BAT
15.Power-DC IN
16.40PIN CONNECT
17.GPIO+VCC_Connector
18.High Speed Serial_Connector
19.IO_Connector
20.MIPI_LCD_TX1

Size	Title: CM3 IO	REV
A4	Page Name: Index	1.36
Date: Wednesday, March 04, 2026	Sheet 02 of 20	

Block Diagram

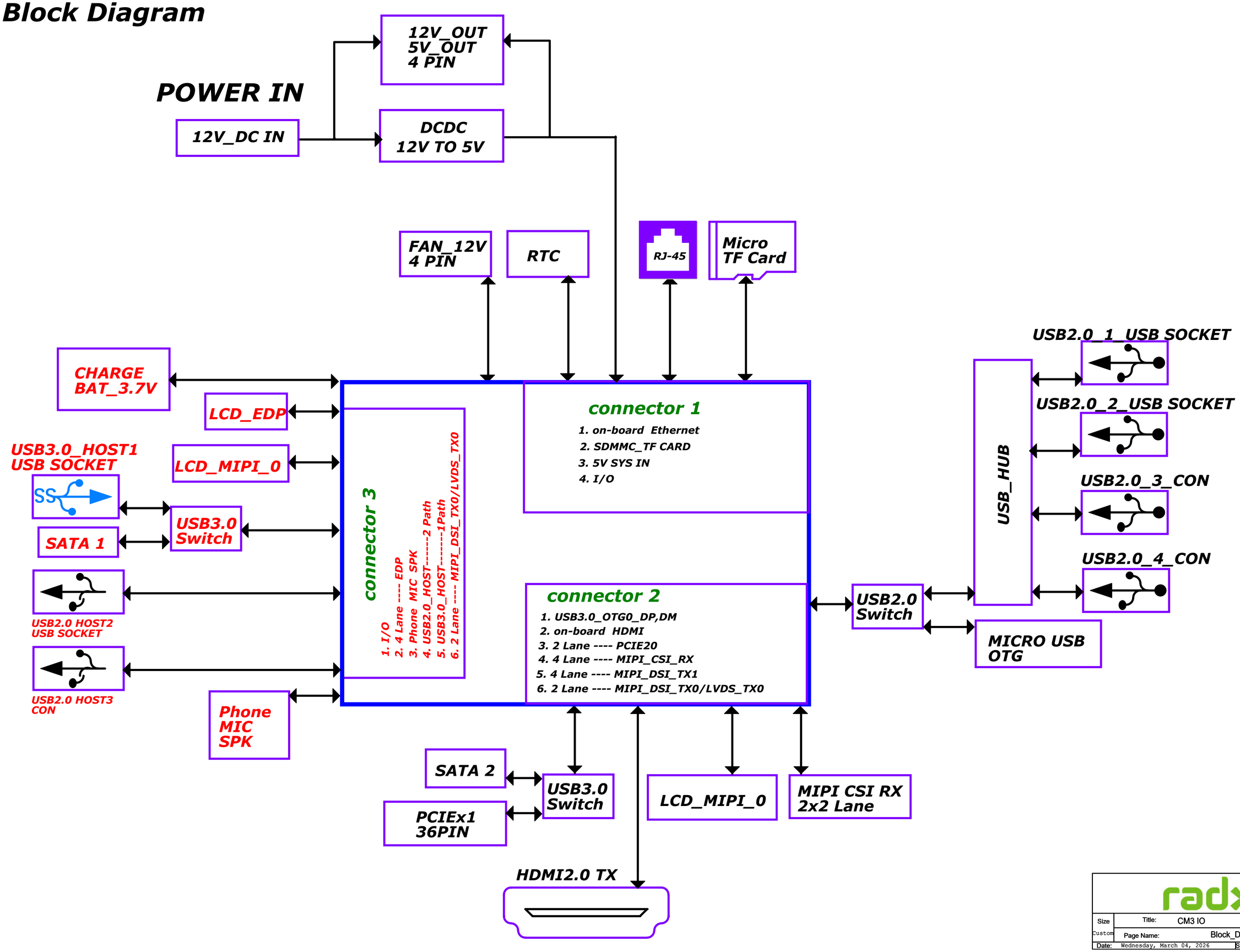

radxa

Size	Title: CM3 IO	REV
Custom	Page Name: Block_Diagram	1.36
Date: Wednesday, March 04, 2026	Sheet 03 of 20	

HDMI2.0 TX

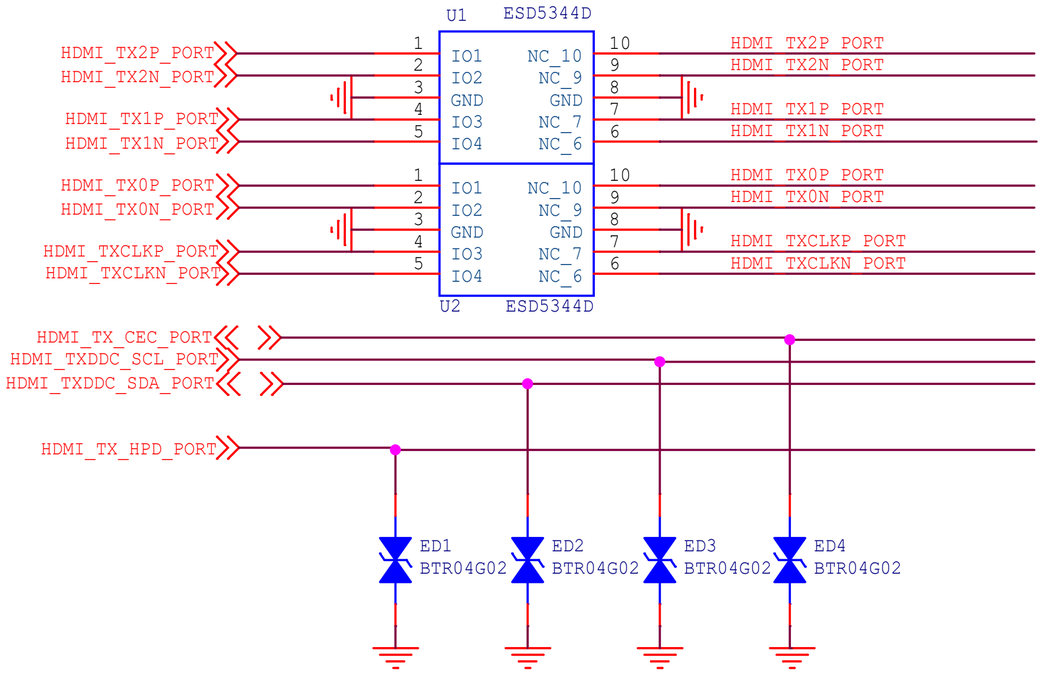

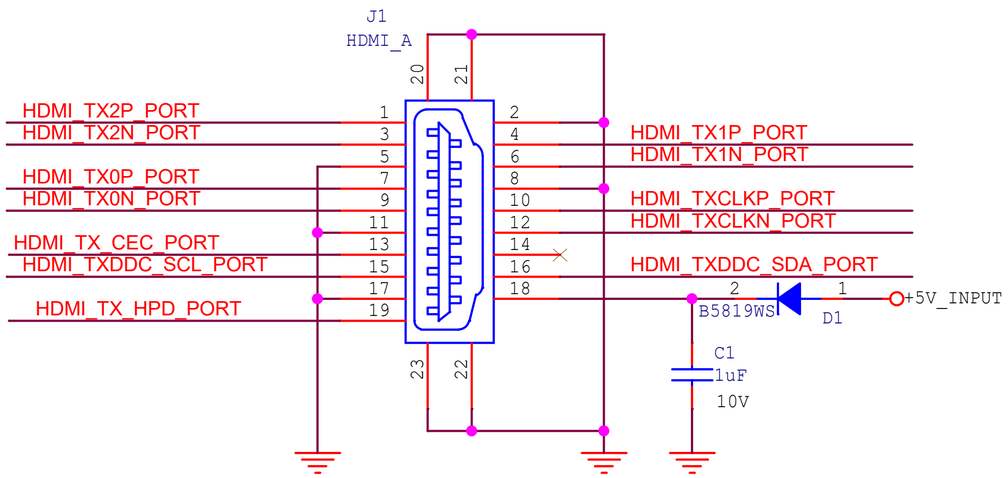

Size	Title: CM3 IO	REV
A4	Page Name: HDMI0 OUT	1.36
Date: Wednesday, March 04, 2026	Sheet 04 of 20	

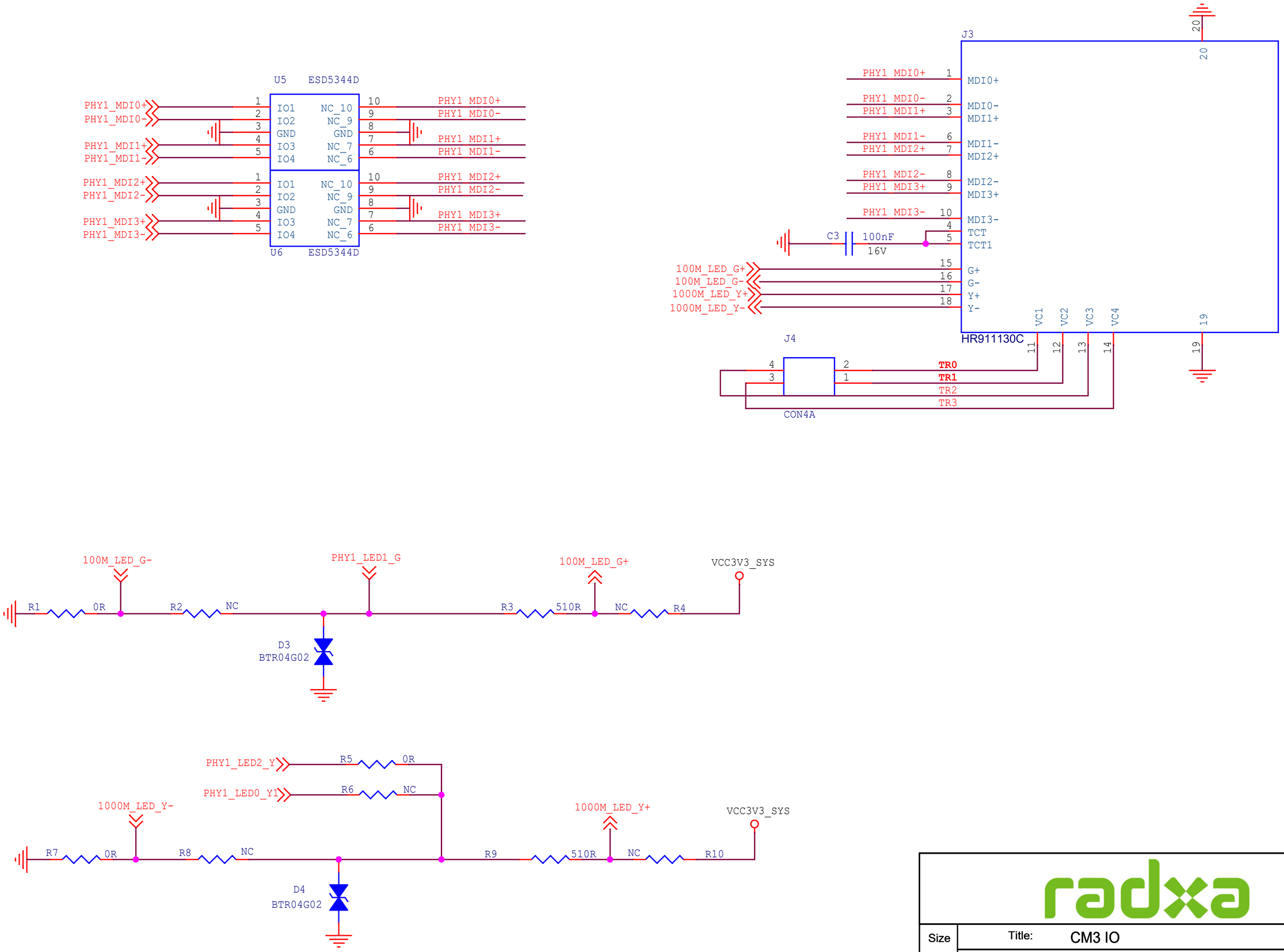

Size	Title: CM3 IO	REV
A4	Page Name: Ethernet	1.36
Date: Wednesday, March 04, 2026	Sheet 05 of 20	

MicroSD Card

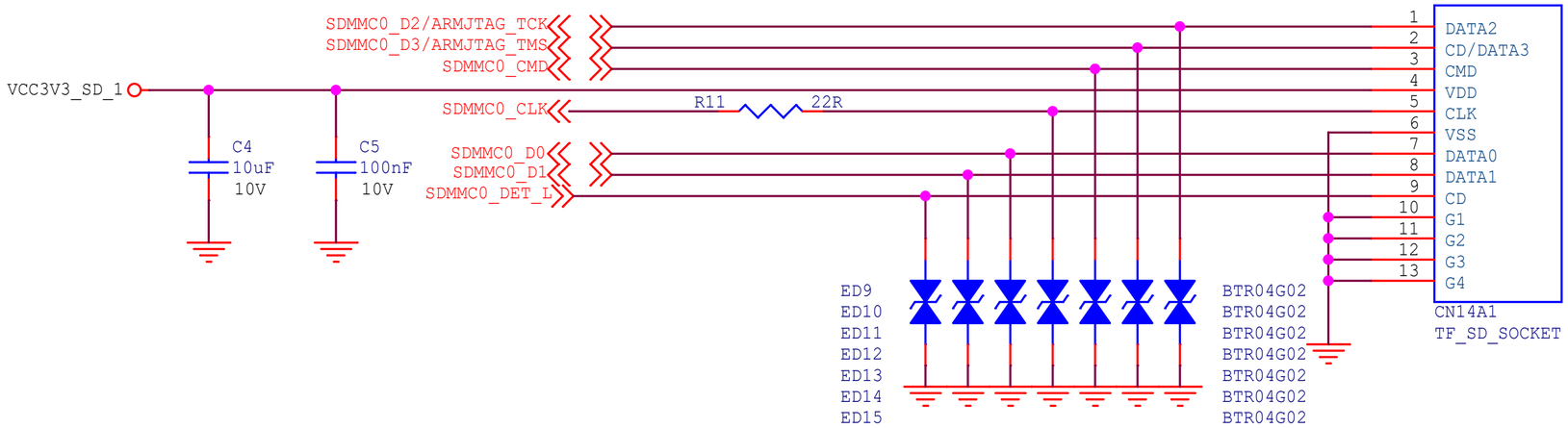

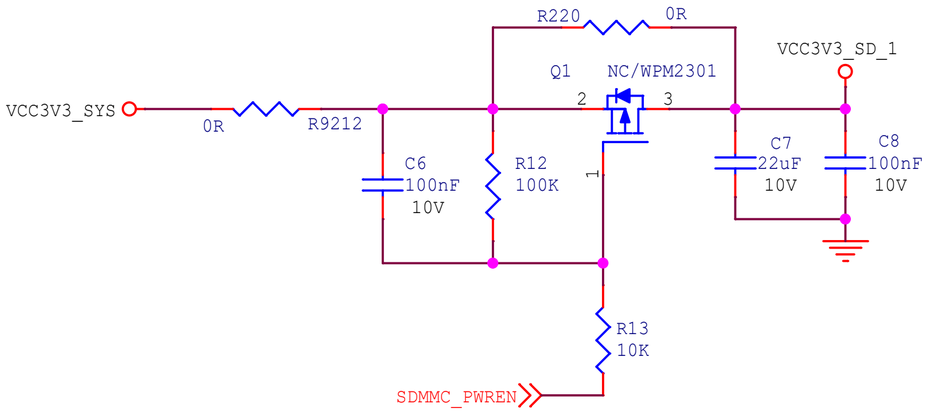

Size	Title: CM3 IO	REV
A4	Page Name: MicroSD Card	1.36
Date: Wednesday, March 04, 2026	Sheet 06 of 20	

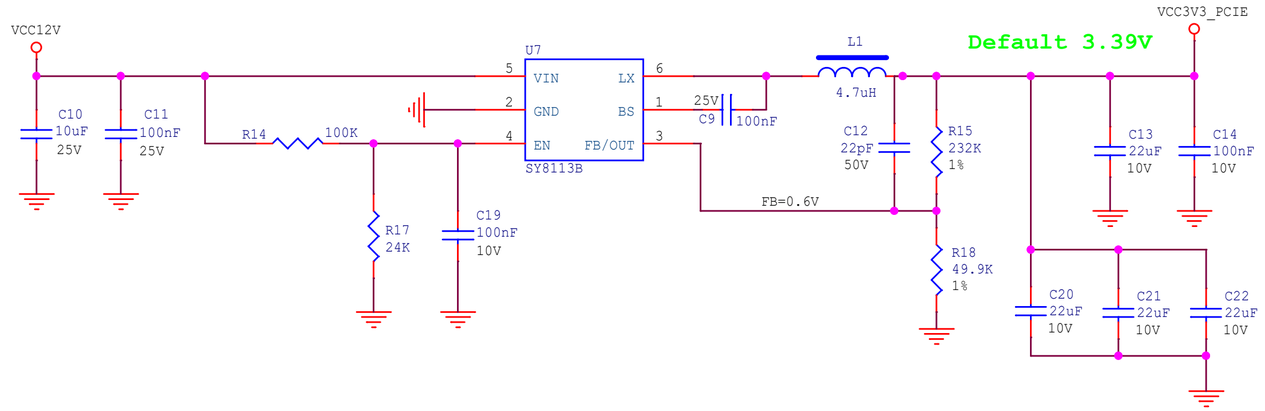

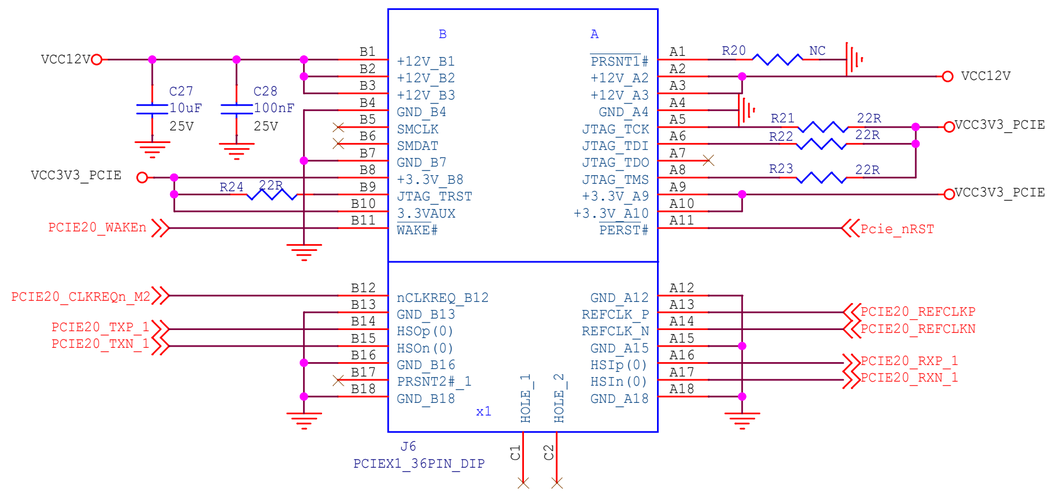

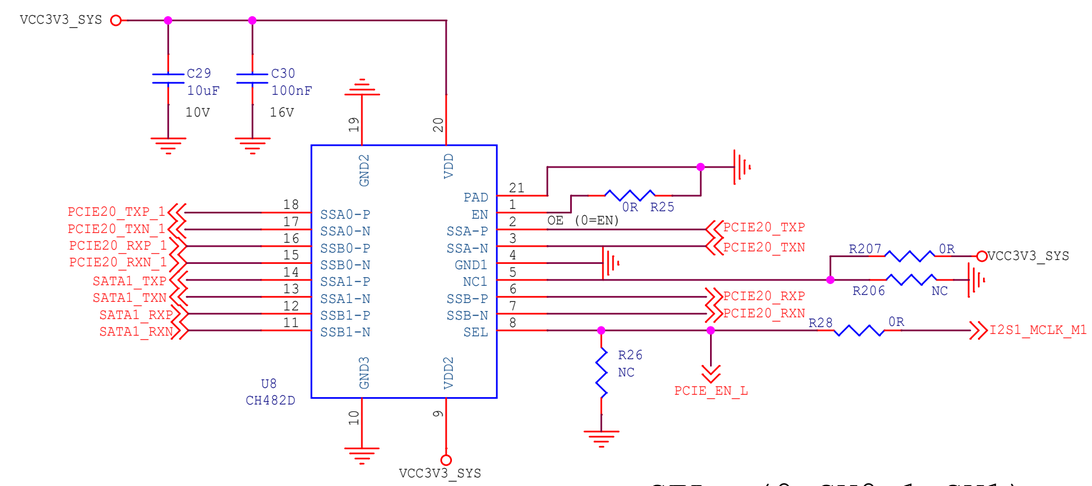

SEL (0=SW0,1=SW1)

SATA3.0 Port2

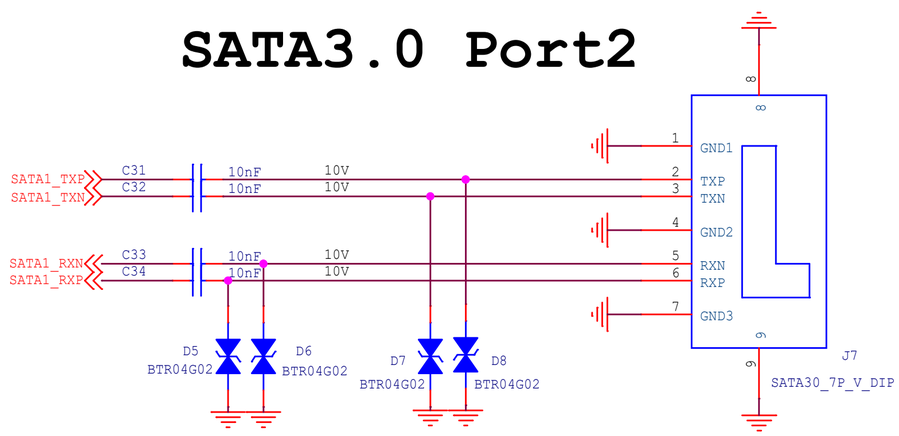

Size	Title: CM3 IO	REV
B	Page Name: PCIE2.0	1.36
Date: Wednesday, March 04, 2026	Sheet 07 of 20	

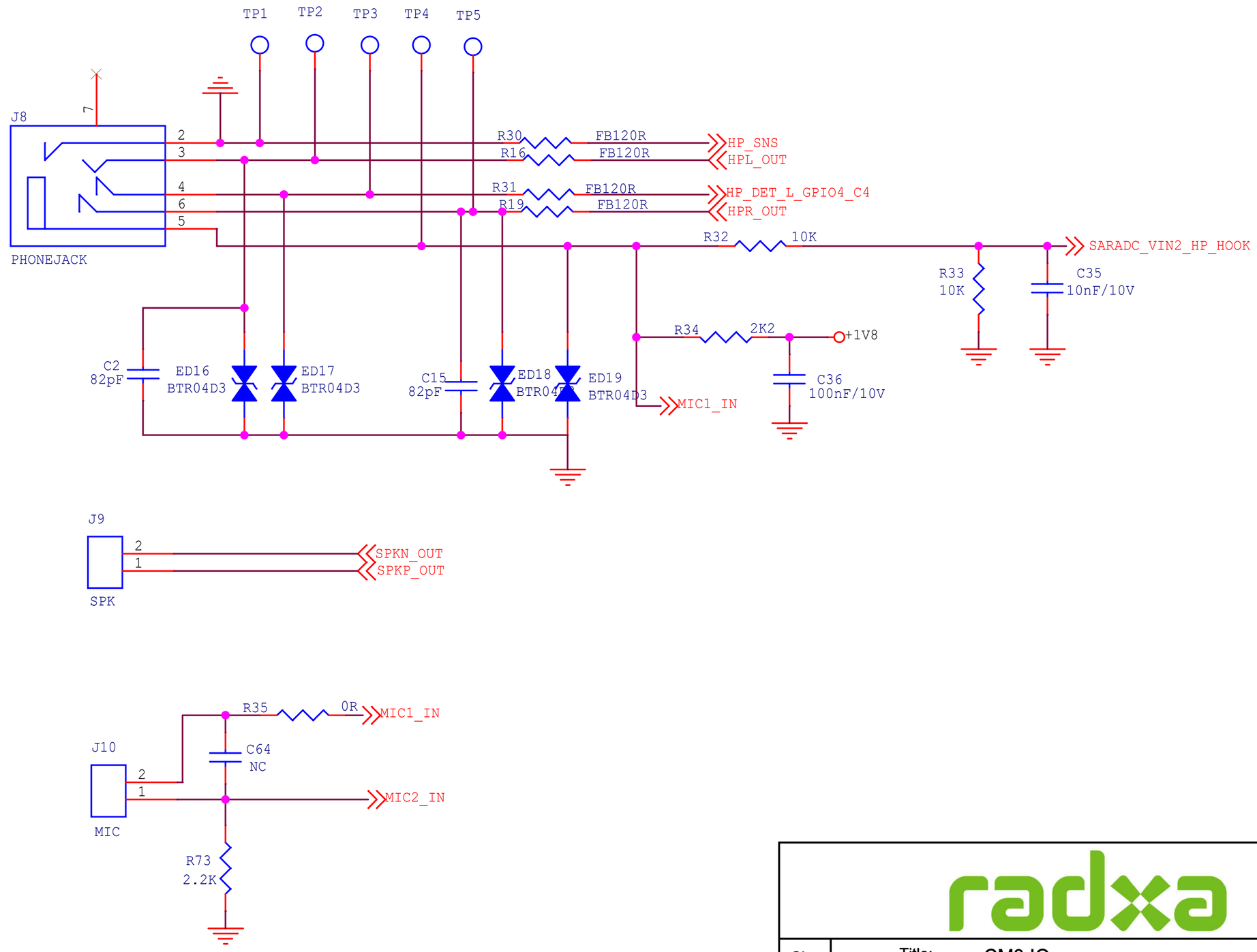

radxa

Size	Title: CM3 IO	REV
A	Page Name: AUDIO	1.36
Date: Wednesday, March 04, 2026	Sheet 08 of 20	

Single-eDP LCM

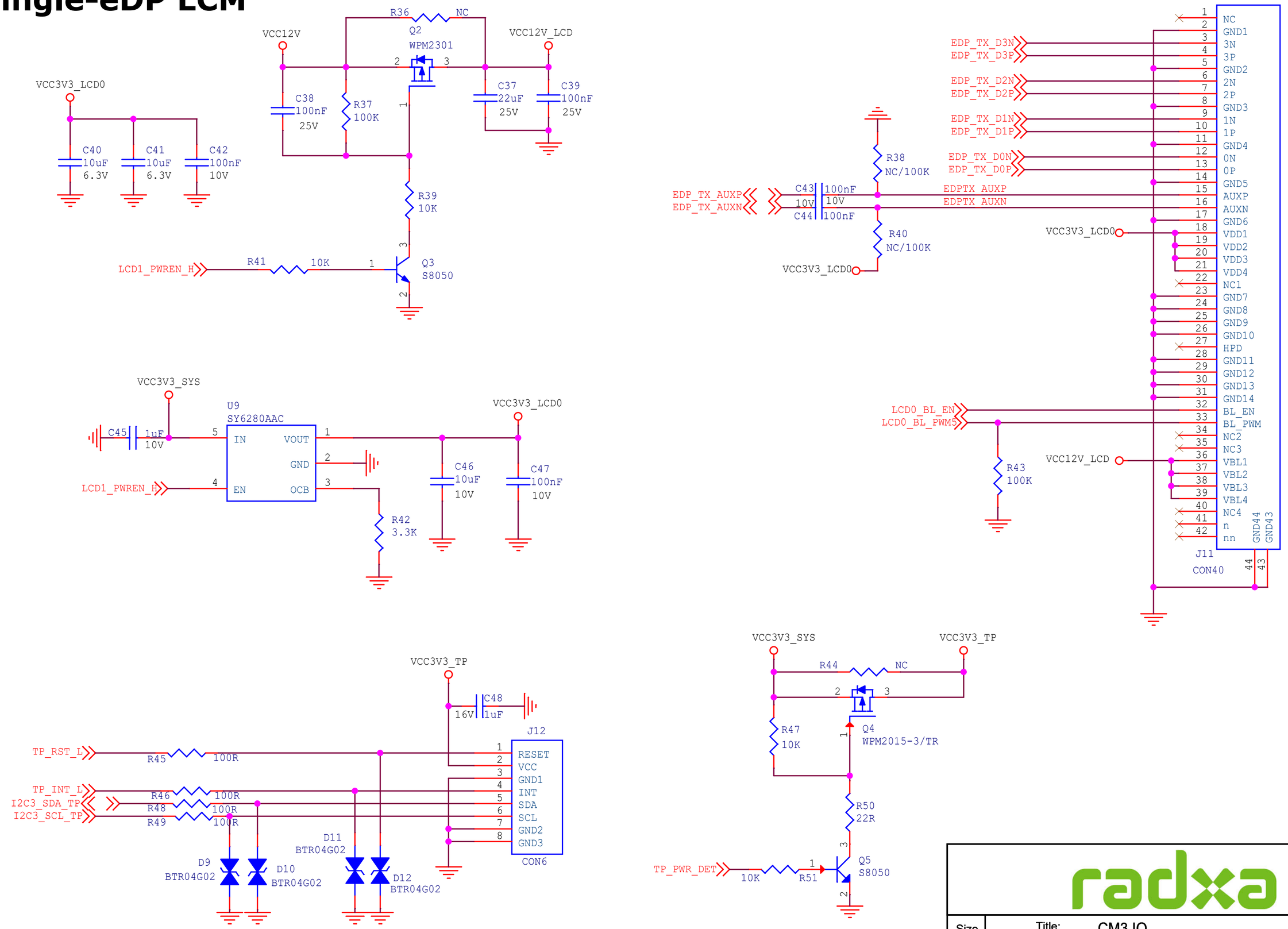

Size	Title: CM3 IO	REV
A4	Page Name: LCD_eDP TX	1.36
Date: Wednesday, March 04, 2026	Sheet 09 of 20	

MIPI_LCD_TX0

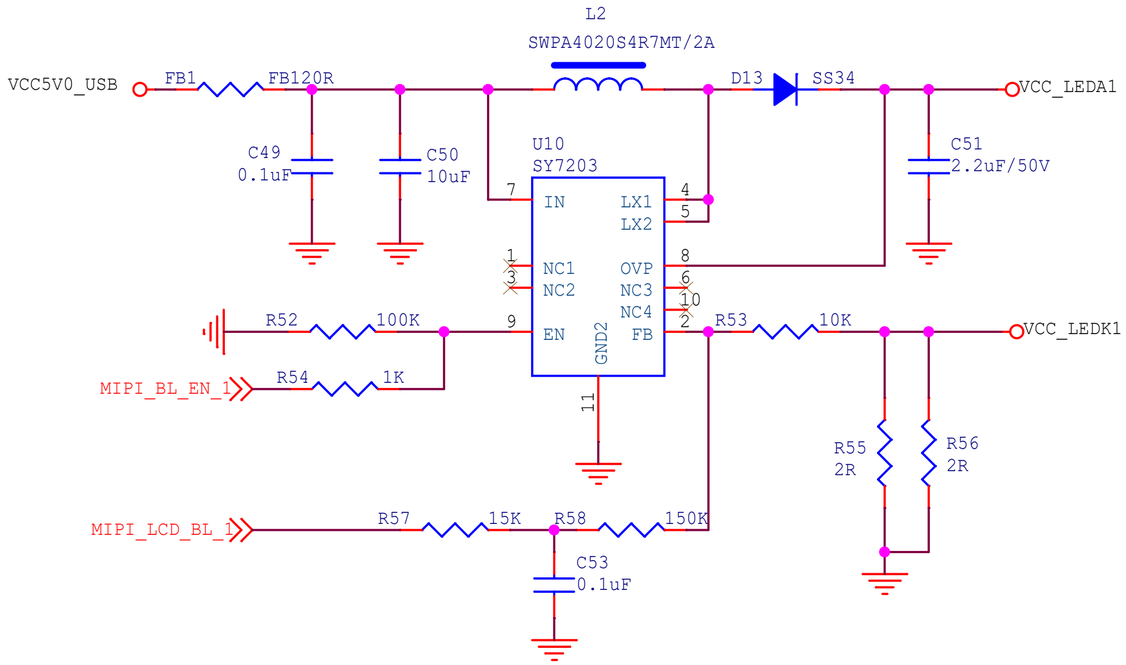

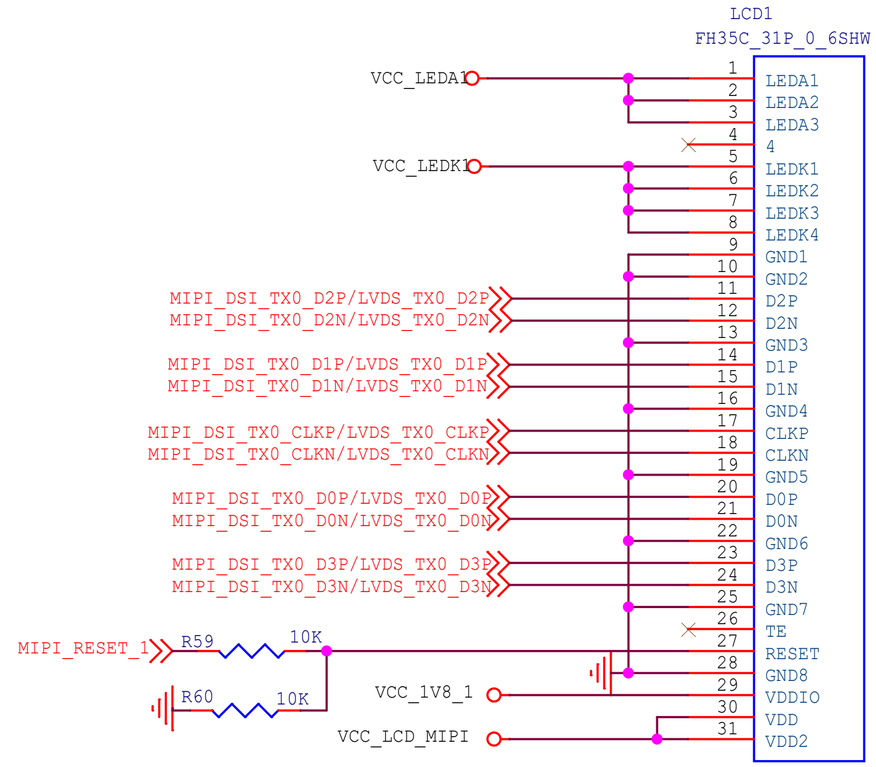

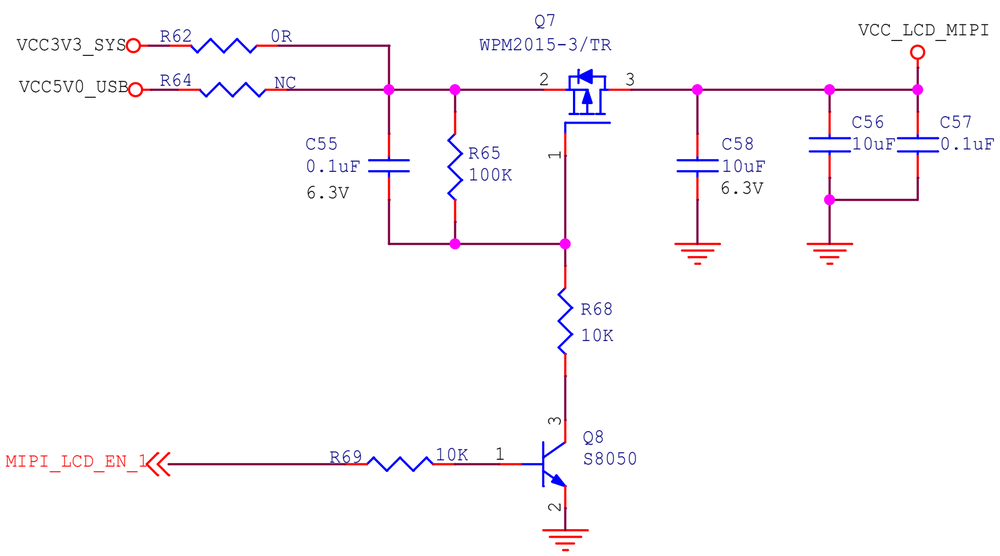

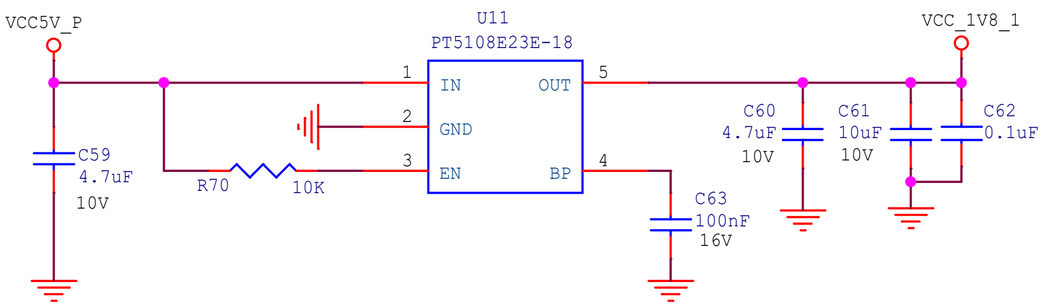

Size	Title: CM3 IO	REV
A4	Page Name: MIPI_LCD_TX0	1.36
Date: Wednesday, March 04, 2026	Sheet 10 of 20	

MIPI_CSI_RX 2Lanes

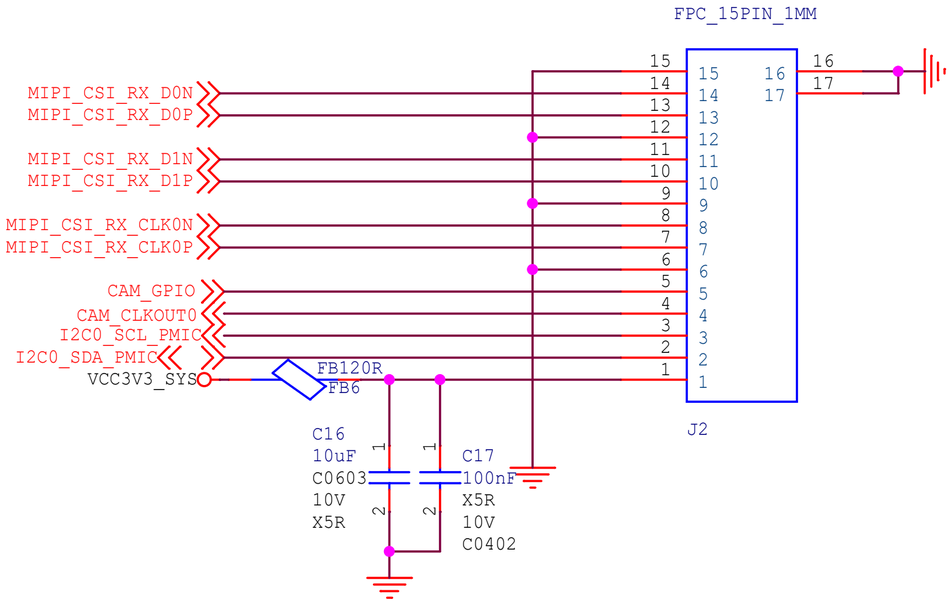

MIPI_CSI_RX 2Lanes

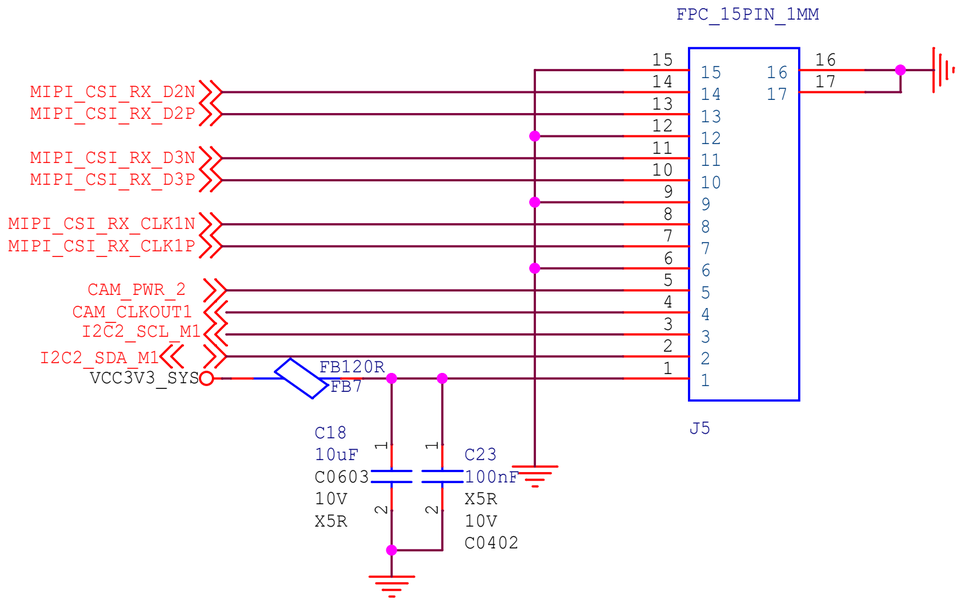

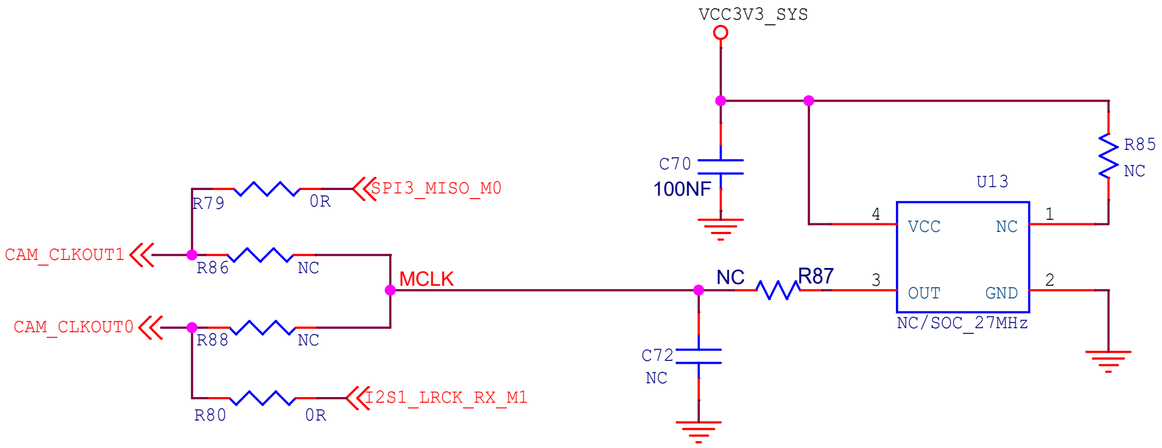

Size	Title: CM3 IO	REV
A4	Page Name: MIPI_CSI_RX	1.36
Date: Wednesday, March 04, 2026	Sheet 11 of 20	

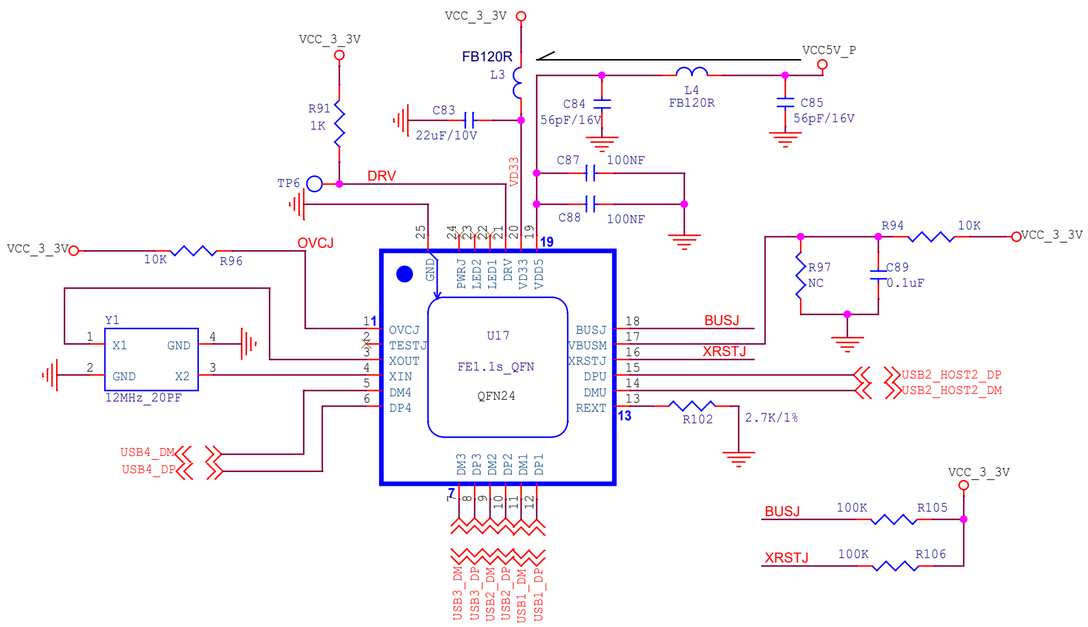

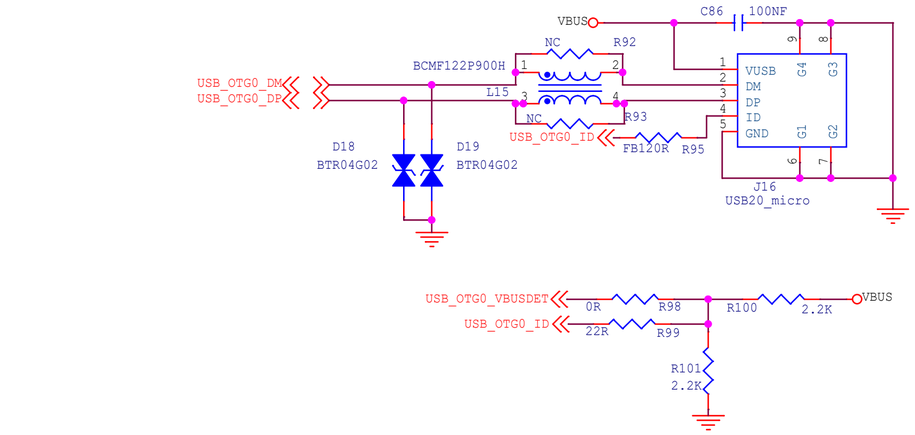

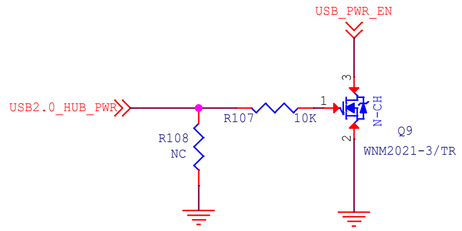

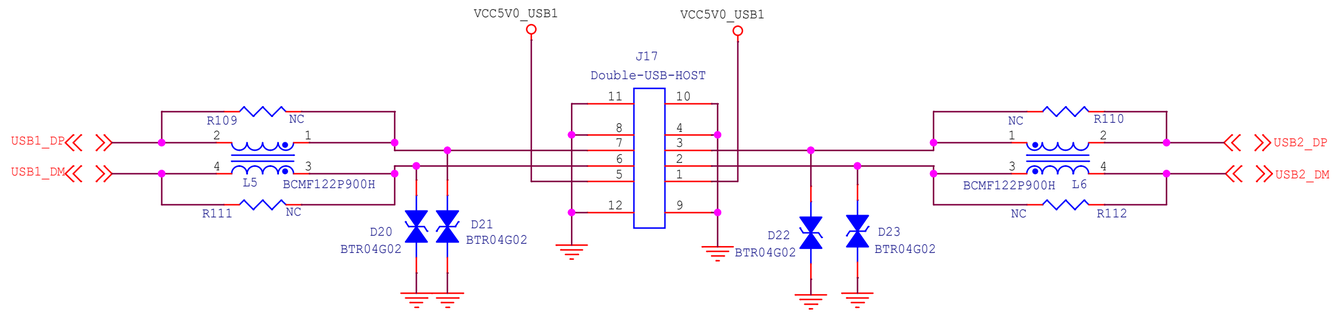

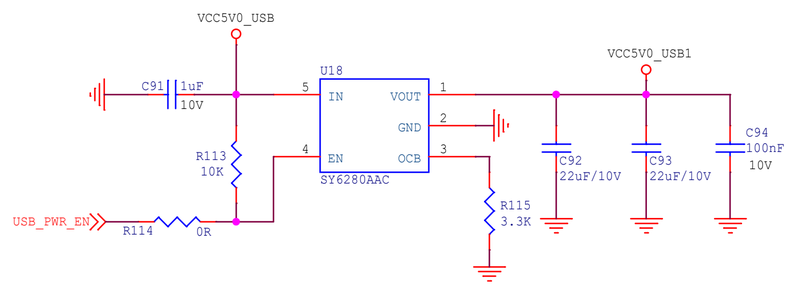

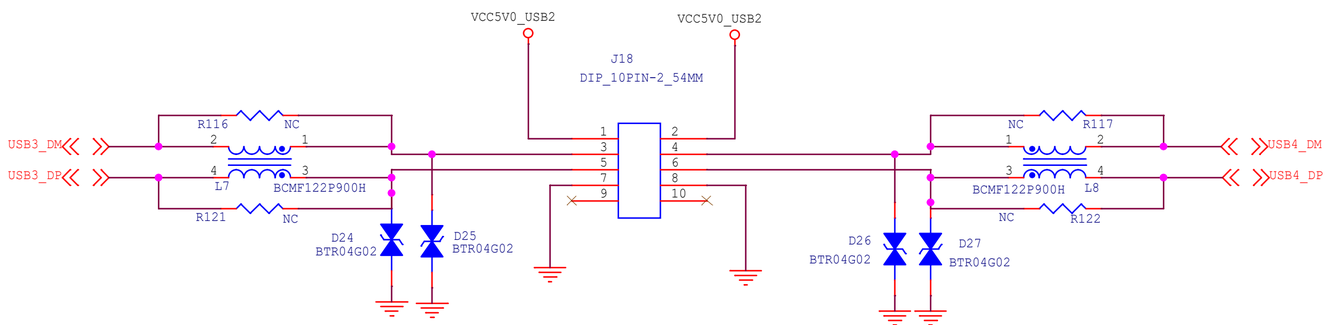

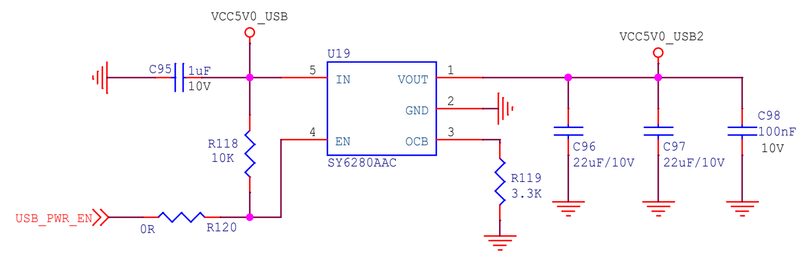

radxa

Size	Title: CM3 IO	REV
A3	Page Name: USB OTG/ HUB	1.36
Date: Wednesday, March 04, 2026	Sheet 12 of 20	

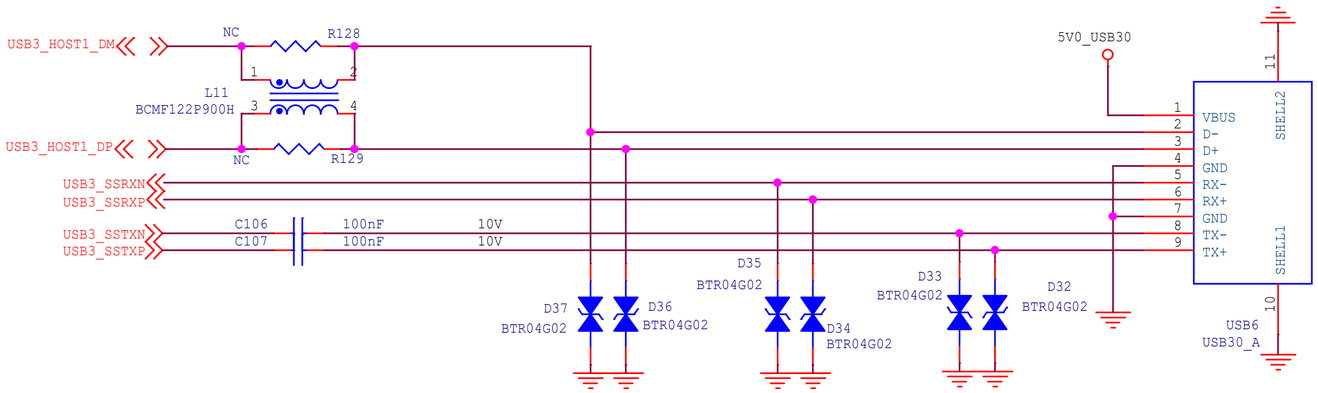

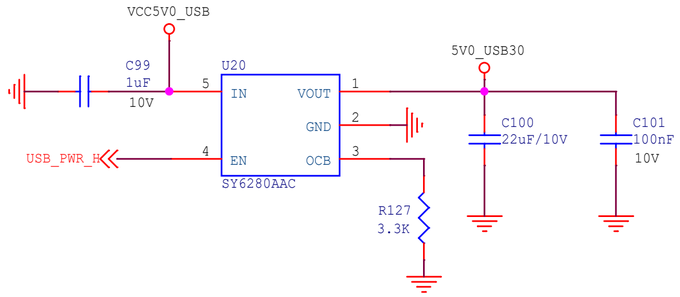

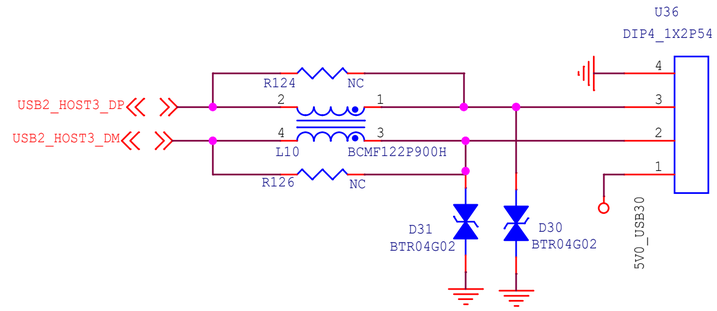

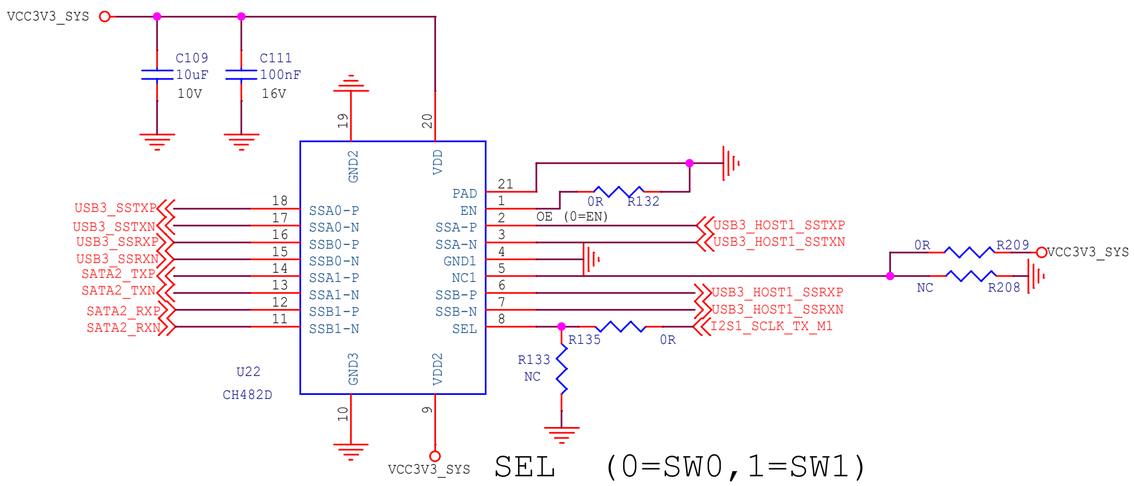

SATA3.0 Port2

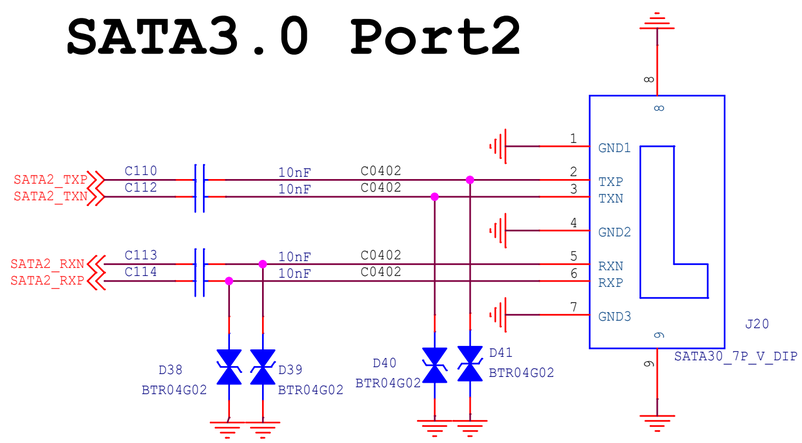

Size	Title: CM3 IO	REV
B	Page Name: USB HOST	1.36
Date: Wednesday, March 04, 2026	Sheet 13 of 20	

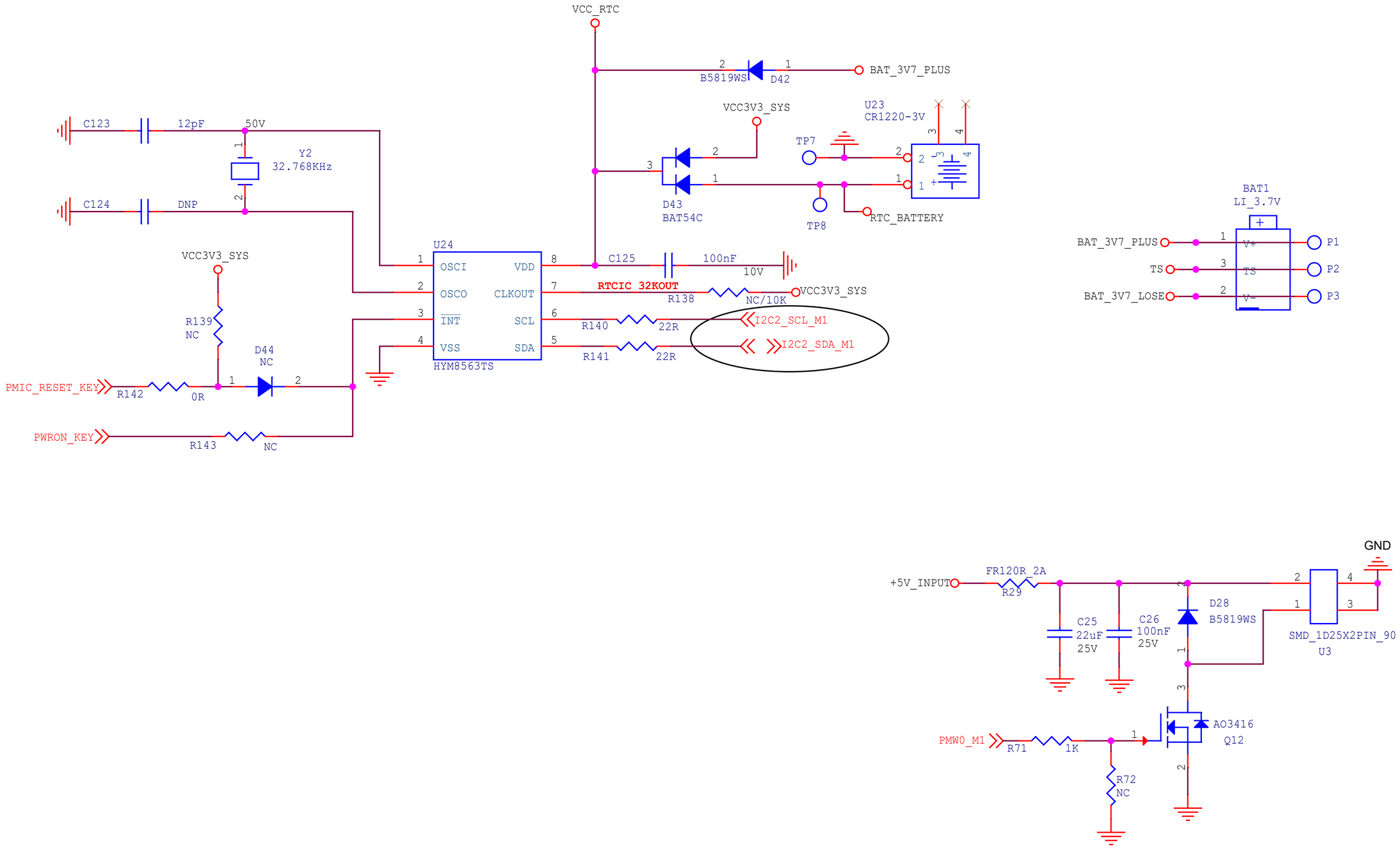

Size	Title: CM3 IO	REV
A4	Page Name: FAN_RTC_BAT	1.36
Date: Wednesday, March 04, 2026	Sheet 14 of 20	

DC IN&SYSTEM Power

VCC12V_DCIN-VOLTAGE	ADC
5V	0.25V
12V	0.9V
20V	1.51V

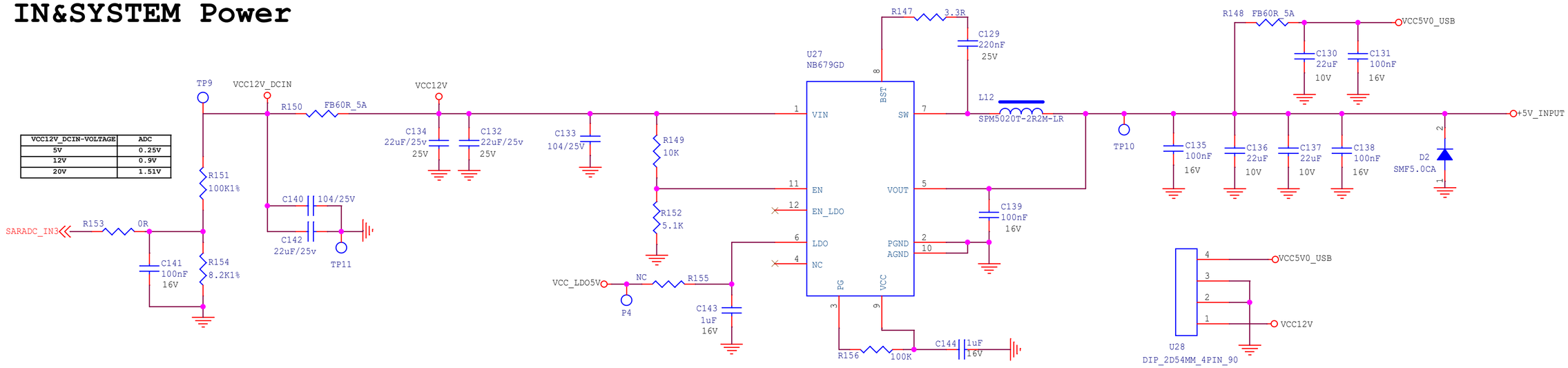

DC12V

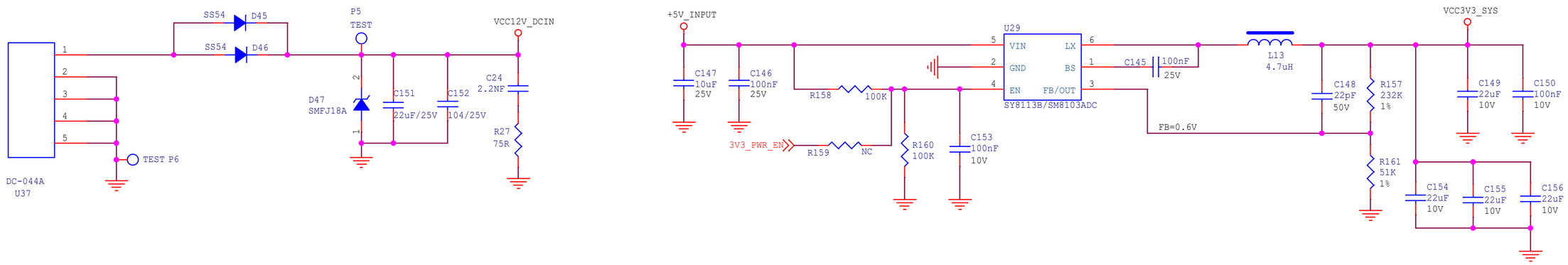

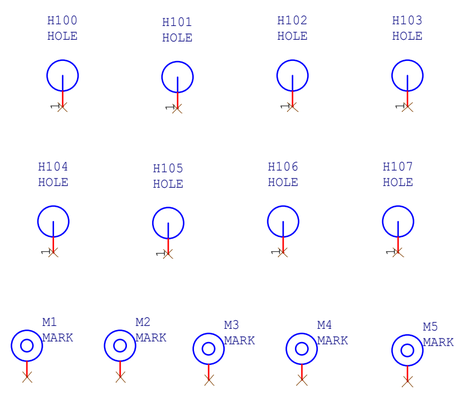

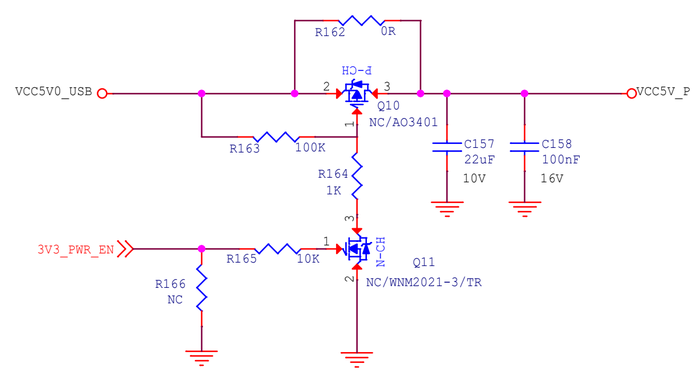

radxa

Size	Title: CM3 IO	REV
A3	Page Name: Power-DC IN	1.36
Date: Wednesday, March 04, 2026	Sheet 15 of 20	

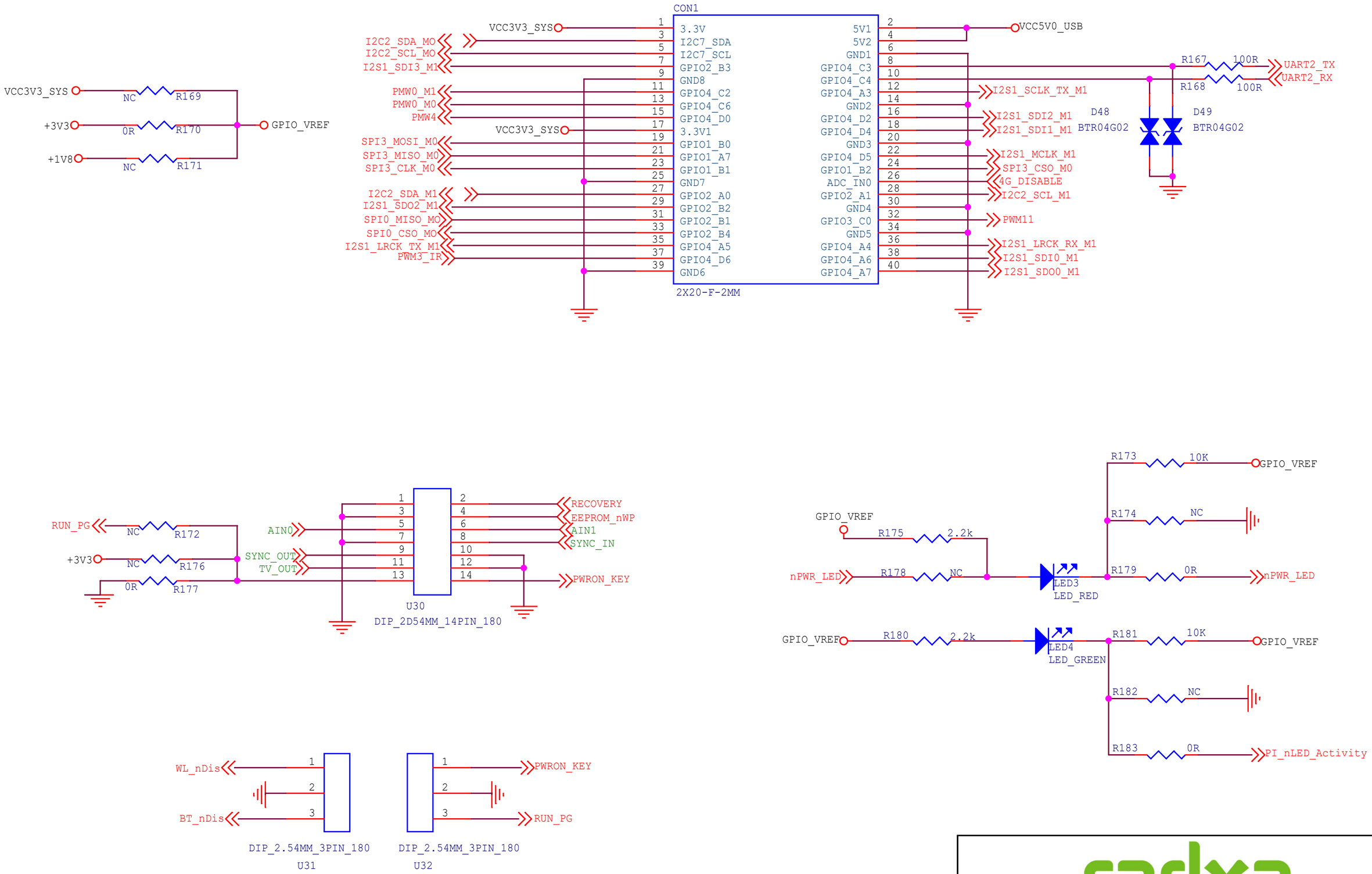

Size	Title: CM3 IO	REV
A4	Page Name: 40PIN CONNECT	1.36
Date: Wednesday, March 04, 2026	Sheet 16 of 20	

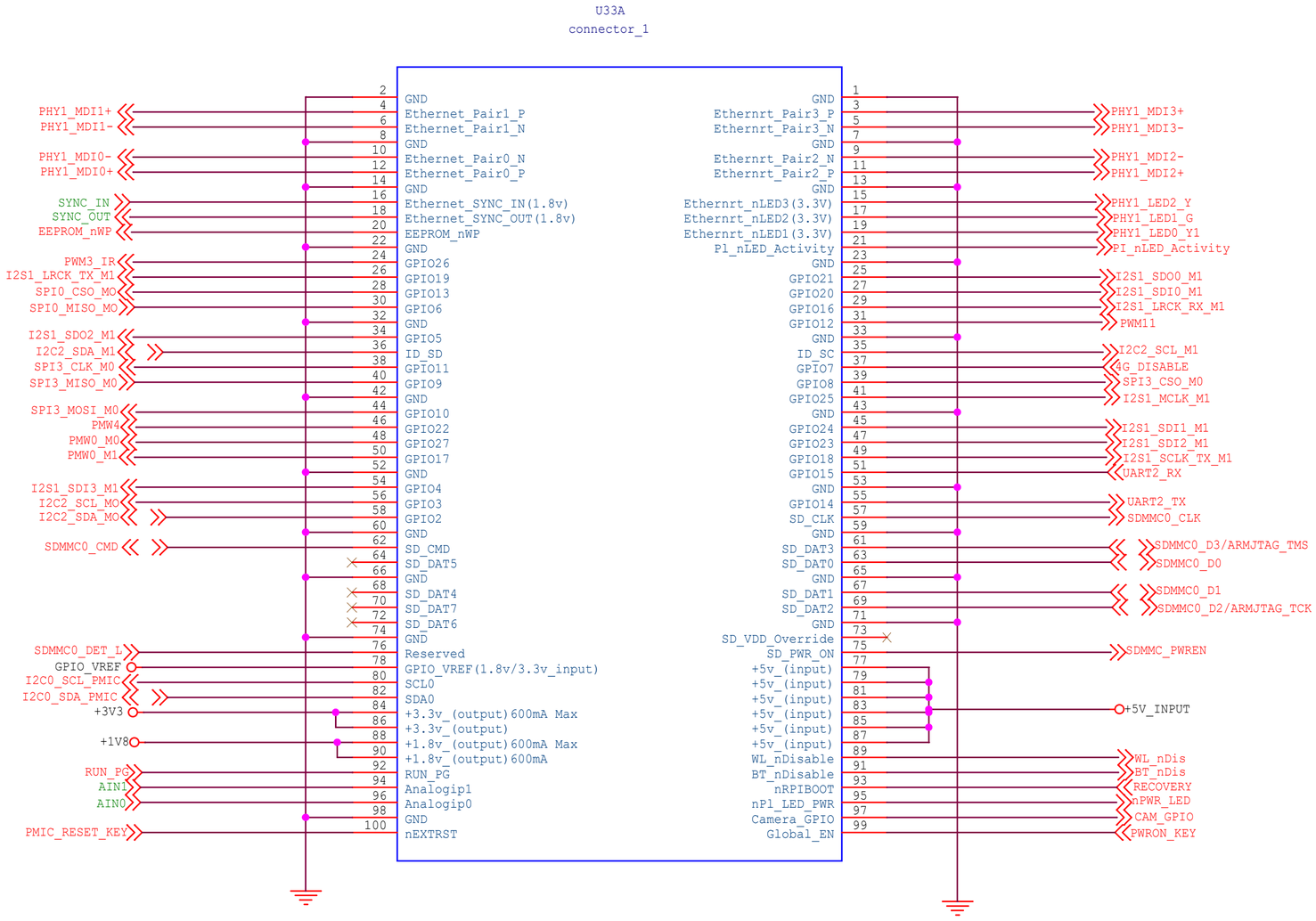

Size	Title: CM3 IO	REV
B	Page Name: GPIO+VCC_Connector	1.36
Date: Wednesday, March 04, 2026	Sheet 17 of 20	

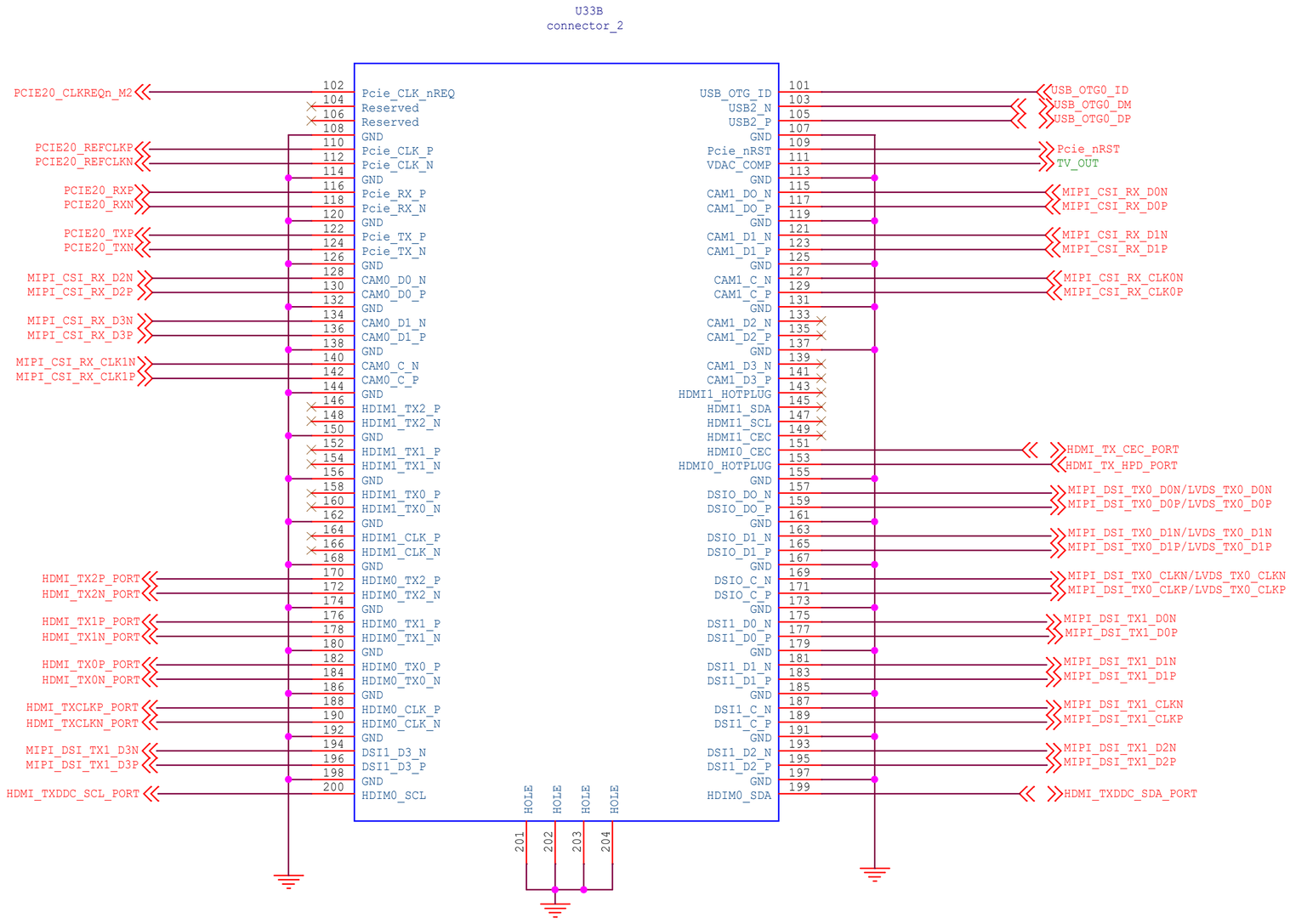

radxa

Size	Title: CM3 IO	REV
B	Page Name: High Speed Serial_Connector	1.36
Date: Wednesday, March 04, 2026	Sheet 18 of 20	

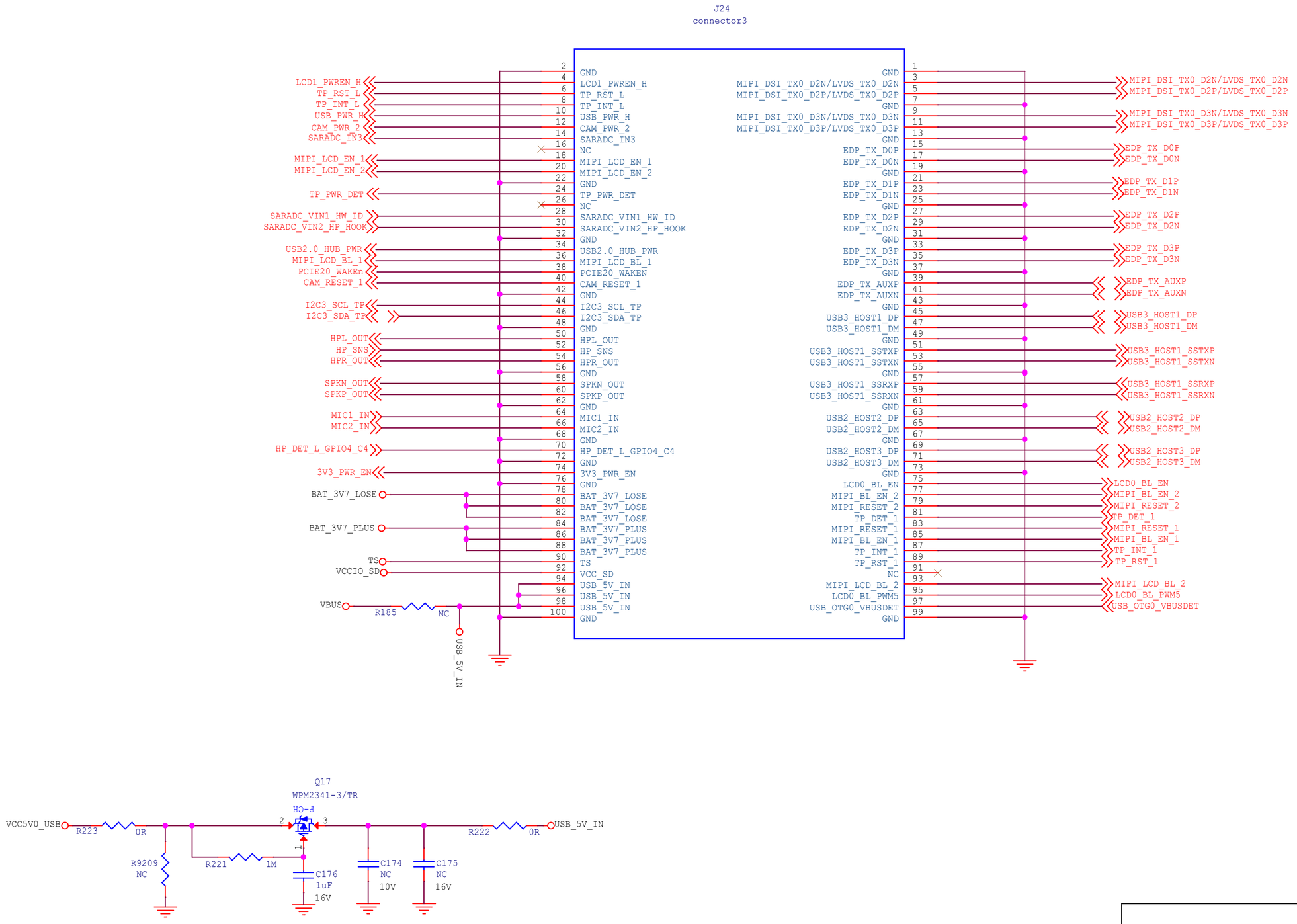

Size	Title: CM3 IO	REV
B	Page Name: IO_Connector	1.36
Date: Wednesday, March 04, 2026	Sheet 19 of 20	

MIPI_LCD_TX1

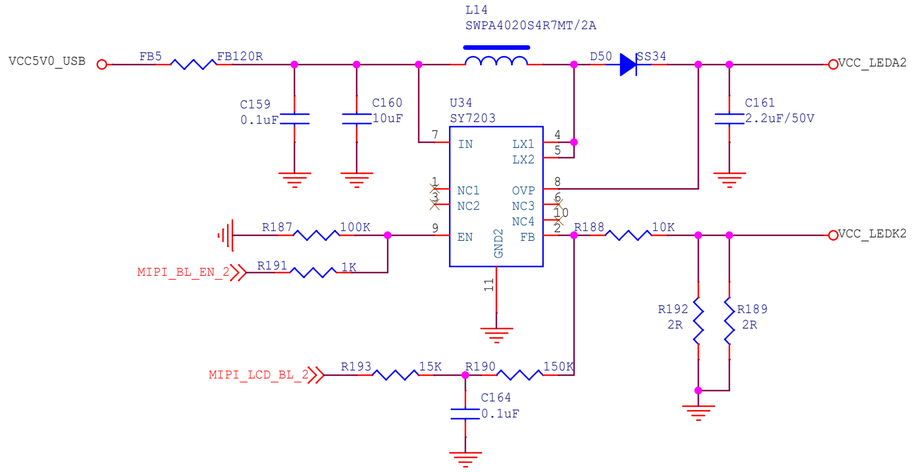

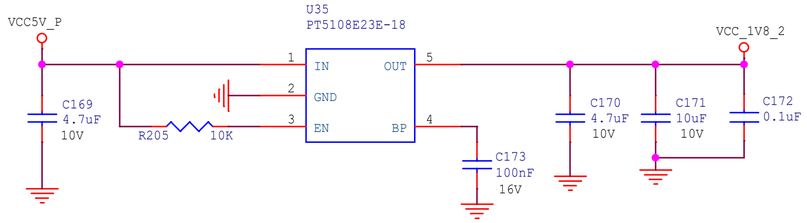

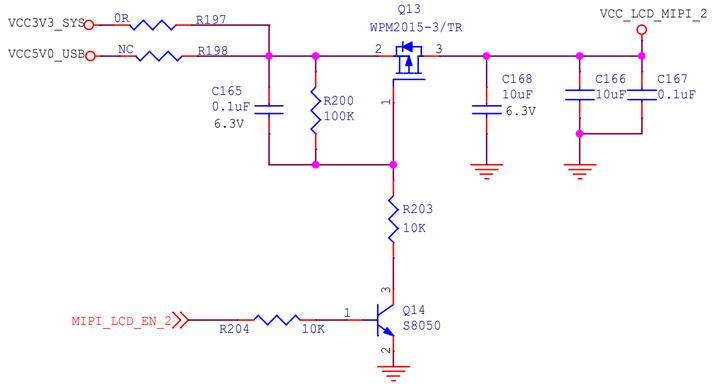

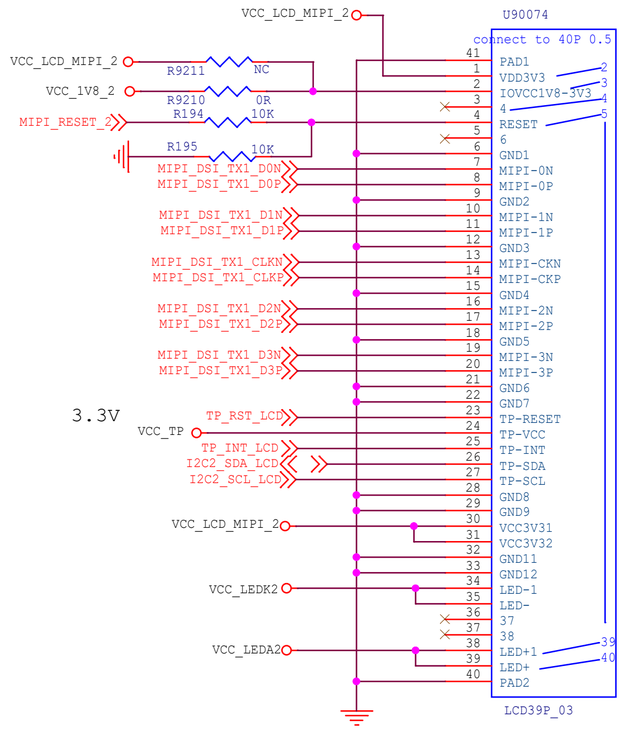

LCD_TP

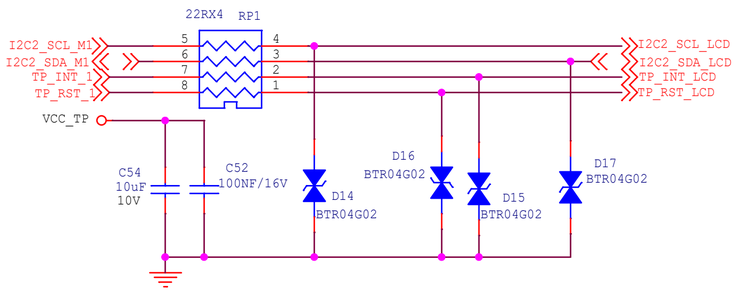

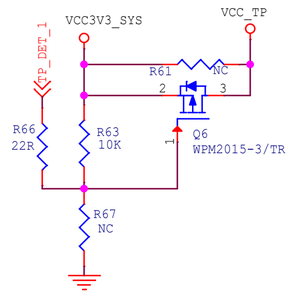

Size	Title: CM3 IO	REV
A3	Page Name: MIPI_LCD_TX1	1.36
Date: Wednesday, March 04, 2026	Sheet 20 of 20	