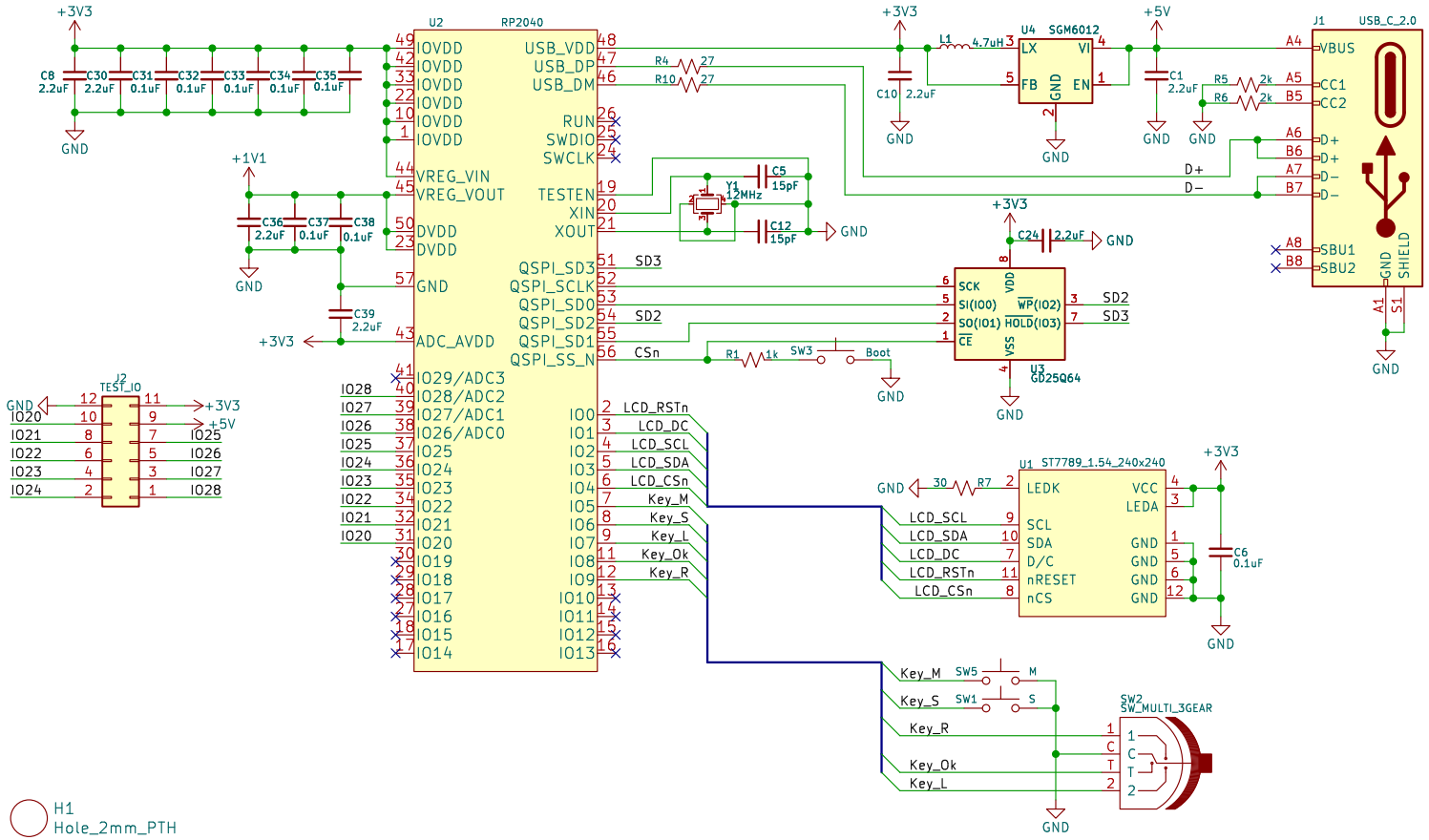

By Gongyu Su
www.eetree.cn
EETree Info & Tech Limited

Sheet: /
File: Probe2040.kicad_sch

Title: RP2040 Based Prober

Size: A4	Date: 2023-06-15	**Rev: V1.0**
KiCad E.D.A. kicad 7.0.1-0		Id: 1/1