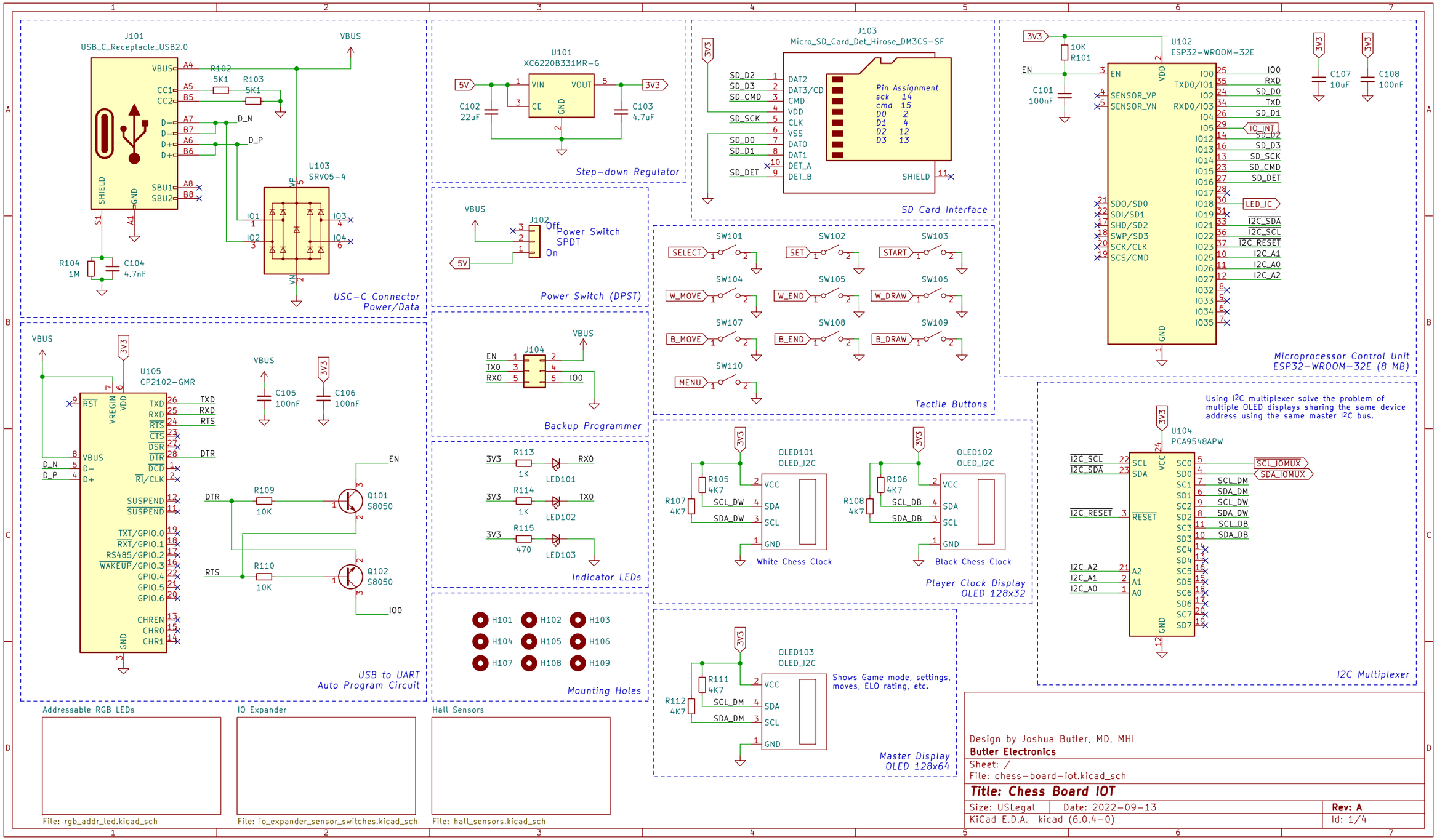
J101
USB_C_Receptacle_USB2.0
VBUS
R102
5K1
R103
5K1
CC1
CC2
D_N
D_P
SHIELD
GND
SBU1
SBU2
S1
A1
R104
1M
C104
4.7nF
U103
SRV05-4
VP
VN
IO1
IO2
IO3
IO4
USC-C Connector
Power/Data
U101
XC6220B331MR-G
5V
VIN
VOUT
CE
GND
3V3
C102
22uF
C103
4.7uF
Step-down Regulator
J103
Micro_SD_Card_Det_Hirose_DM3CS-SF
SD_D2
SD_D3
SD_CMD
SD_SCK
SD_D0
SD_D1
SD_DET
DAT2
DAT3/CD
CMD
VDD
CLK
VSS
DAT0
DAT1
DET_A
DET_B
SHIELD
Pin Assignment
sck 14
cmd 15
D0 2
D1 4
D2 12
D3 13
SD Card Interface
U102
ESP32-WROOM-32E
EN
SENSOR_VP
SENSOR_VN
SDO/SD0
SDI/SD1
SHD/SD2
SWP/SD3
SCK/CLK
SCS/CMD
VDD
GND
IO0
TXD0/IO1
IO2
RXD0/IO3
IO4
IO5
IO12
IO13
IO14
IO15
IO16
IO17
IO18
IO19
IO21
IO22
IO23
IO25
IO26
IO27
IO32
IO33
IO34
IO35
RXD
SD_D0
TXD
SD_D1
IO_INT
SD_D2
SD_D3
SD_SCK
SD_CMD
SD_DET
LED_IC
I2C_SDA
I2C_SCL
I2C_RESET
I2C_A1
I2C_A0
I2C_A2
10K
R101
C101
100nF
C107
10uF
C108
100nF
Microprocessor Control Unit
ESP32-WROOM-32E (8 MB)
Power Switch (DPST)
Off
Power Switch
SPDT
On
Backup Programmer
J104
EN
TX0
RX0
IO0
Tactile Buttons
SW101
SW102
SW103
SW104
SW105
SW106
SW107
SW108
SW109
SW110
SELECT
SET
START
W_MOVE
W_END
W_DRAW
B_MOVE
B_END
B_DRAW
MENU
U105
CP2102-GMR
RST
VREGIN
VDD
VBUS
D-
D+
TXD
RXD
RTS
CTS
DSR
DTR
DCD
RI/CLK
SUSPEND
TXT/GPIO.0
RXT/GPIO.1
RS485/GPIO.2
WAKEUP/GPIO.3
GPIO.4
GPIO.5
GPIO.6
CHREN
CHR0
CHR1
C105
100nF
C106
100nF
R109
10K
R110
10K
Q101
S8050
Q102
S8050
USB to UART
Auto Program Circuit
R113
1K
R114
1K
R115
470
LED101
LED102
LED103
Indicator LEDs
H101
H102
H103
H104
H105
H106
H107
H108
H109
Mounting Holes
OLED101
OLED_I2C
R105
4K7
R107
4K7
SCL_DW
SDA_DW
VCC
SDA
SCL
GND
White Chess Clock
OLED102
OLED_I2C
R106
4K7
R108
4K7
SCL_DB
SDA_DB
Black Chess Clock
Player Clock Display
OLED 128x32
OLED103
OLED_I2C
R111
4K7
R112
4K7
SCL_DM
SDA_DM
Shows Game mode, settings, moves, ELO rating, etc.
Master Display
OLED 128x64
Using I2C multiplexer solve the problem of multiple OLED displays sharing the same device address using the same master I2C bus.
U104
PCA9548APW
SCL
SDA
RESET
A2
A1
A0
SC0
SD0
SC1
SD1
SC2
SD2
SC3
SD3
SC4
SD4
SC5
SD5
SC6
SD6
SC7
SD7
SCL_IOMUX
SDA_IOMUX
SCL_DM
SDA_DM
SCL_DW
SDA_DW
SCL_DB
SDA_DB
I2C Multiplexer
Addressable RGB LEDs
File: rgb_addr_led.kicad_sch
IO Expander
File: io_expander_sensor_switches.kicad_sch
Hall Sensors
File: hall_sensors.kicad_sch
Design by Joshua Butler, MD, MHI
Butler Electronics
Sheet: /
File: chess-board-iot.kicad_sch
Title: Chess Board IOT
Size: USLegal
Date: 2022-09-13
Rev: A
KiCad E.D.A. kicad (6.0.4-0)
Id: 1/4

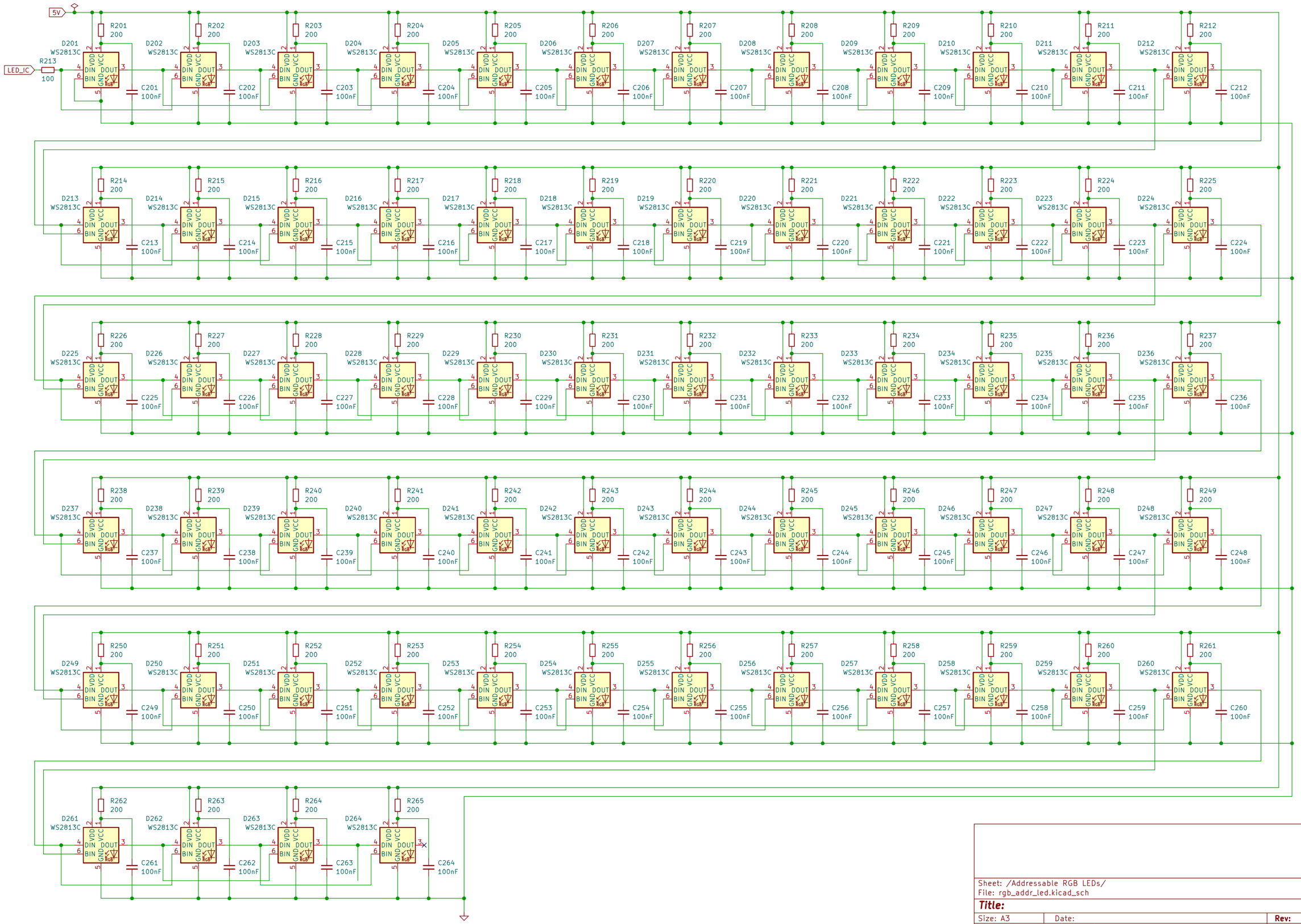

Sheet: /Addressable RGB LEDs/
File: rgb_addr_led.kicad_sch

Title:

Size: A3	Date:	Rev:
KiCad E.D.A. kicad (6.0.4-0)		Id: 2/4

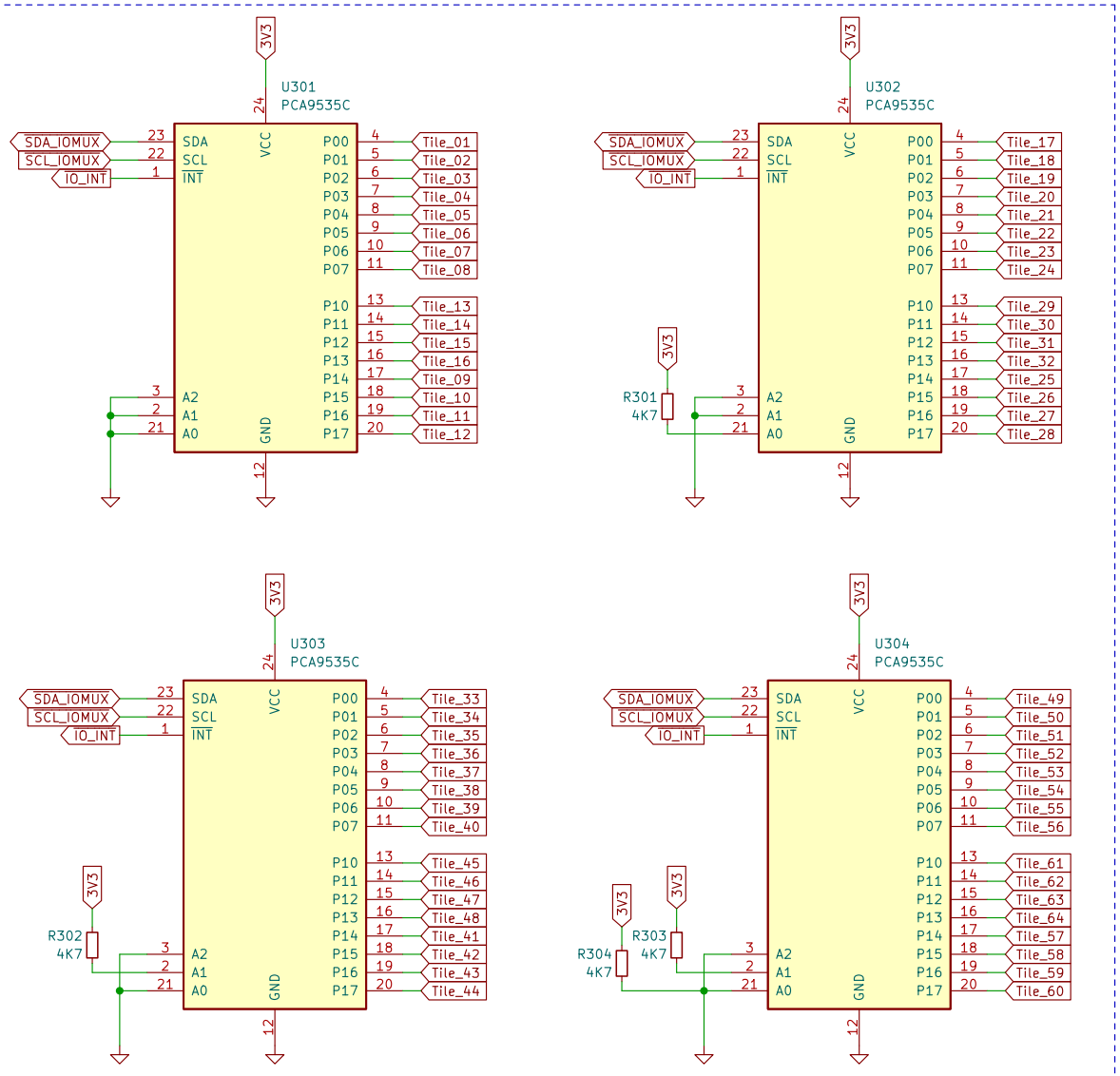

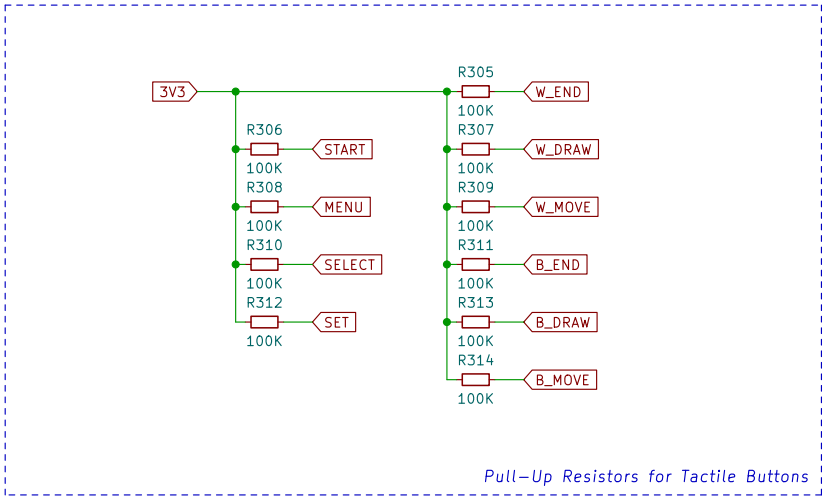

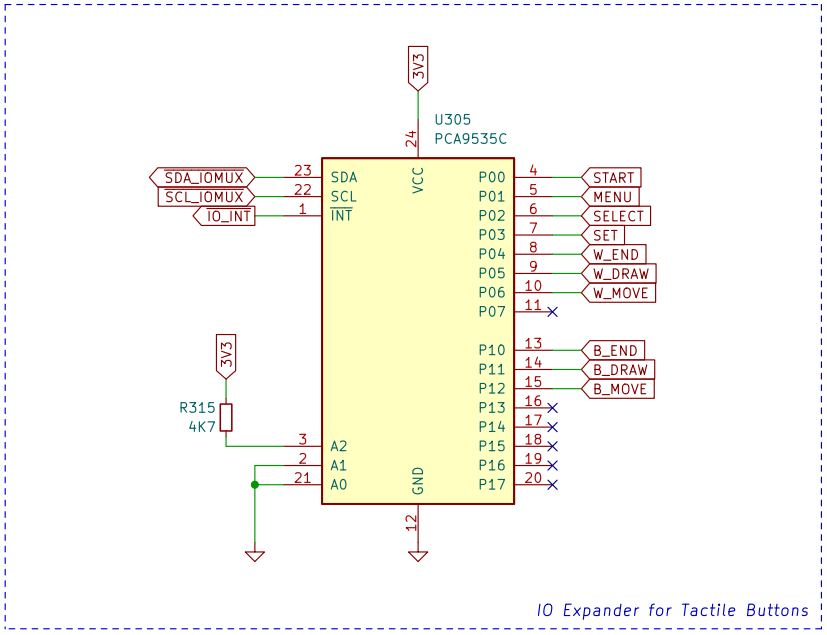

Sheet: /IO Expander/
File: io_expander_sensor_switches.kicad_sch

Title:

Size: A4	Date:	**Rev:**
KiCad E.D.A. kicad (6.0.4-0)		Id: 4/4

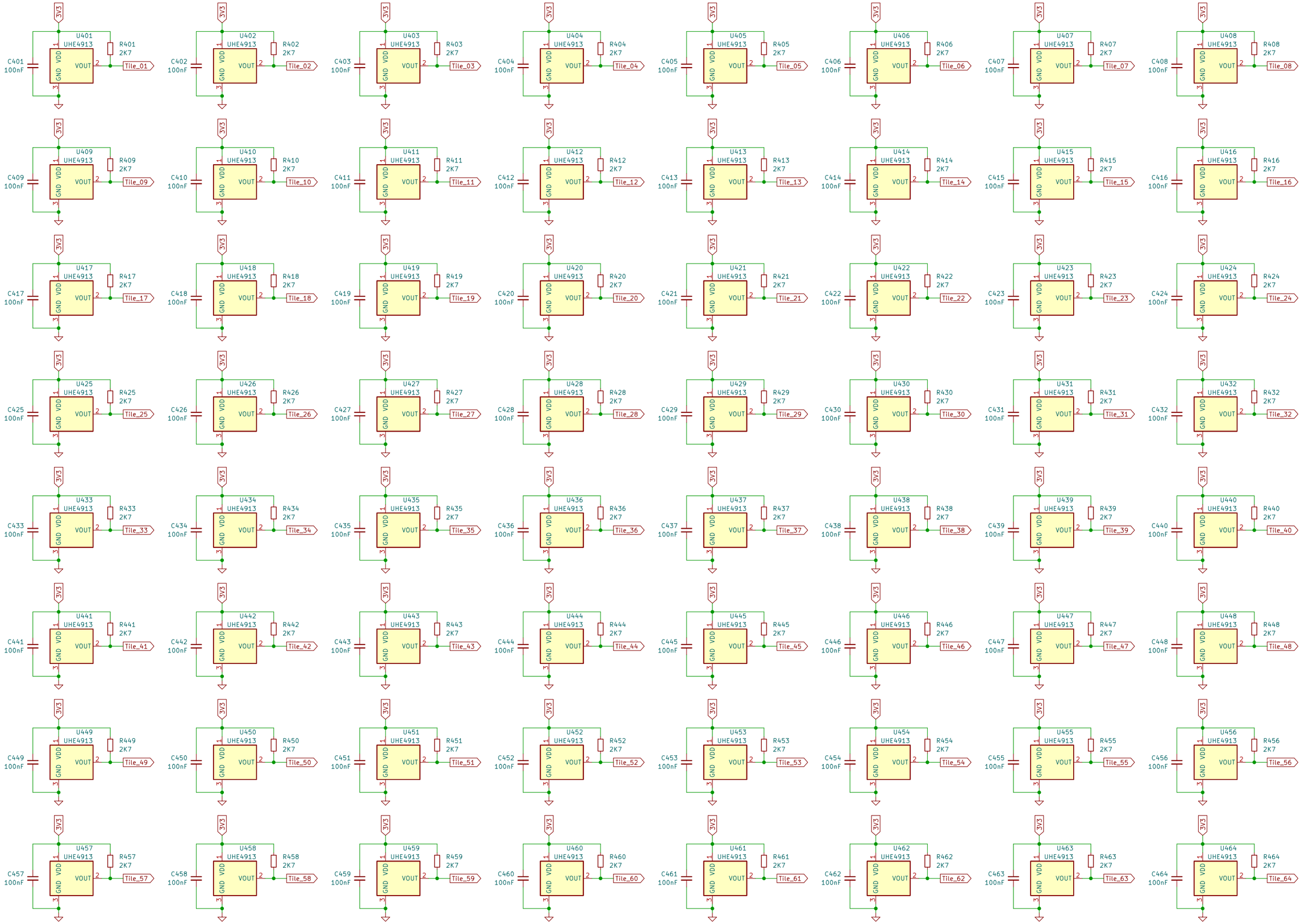

Sheet: /Hall Sensors/
File: hall_sensors.kicad_sch

Title:

Size: User	Date:	Rev:
KiCad E.D.A. kicad (6.0.4-0)		Id: 5/4