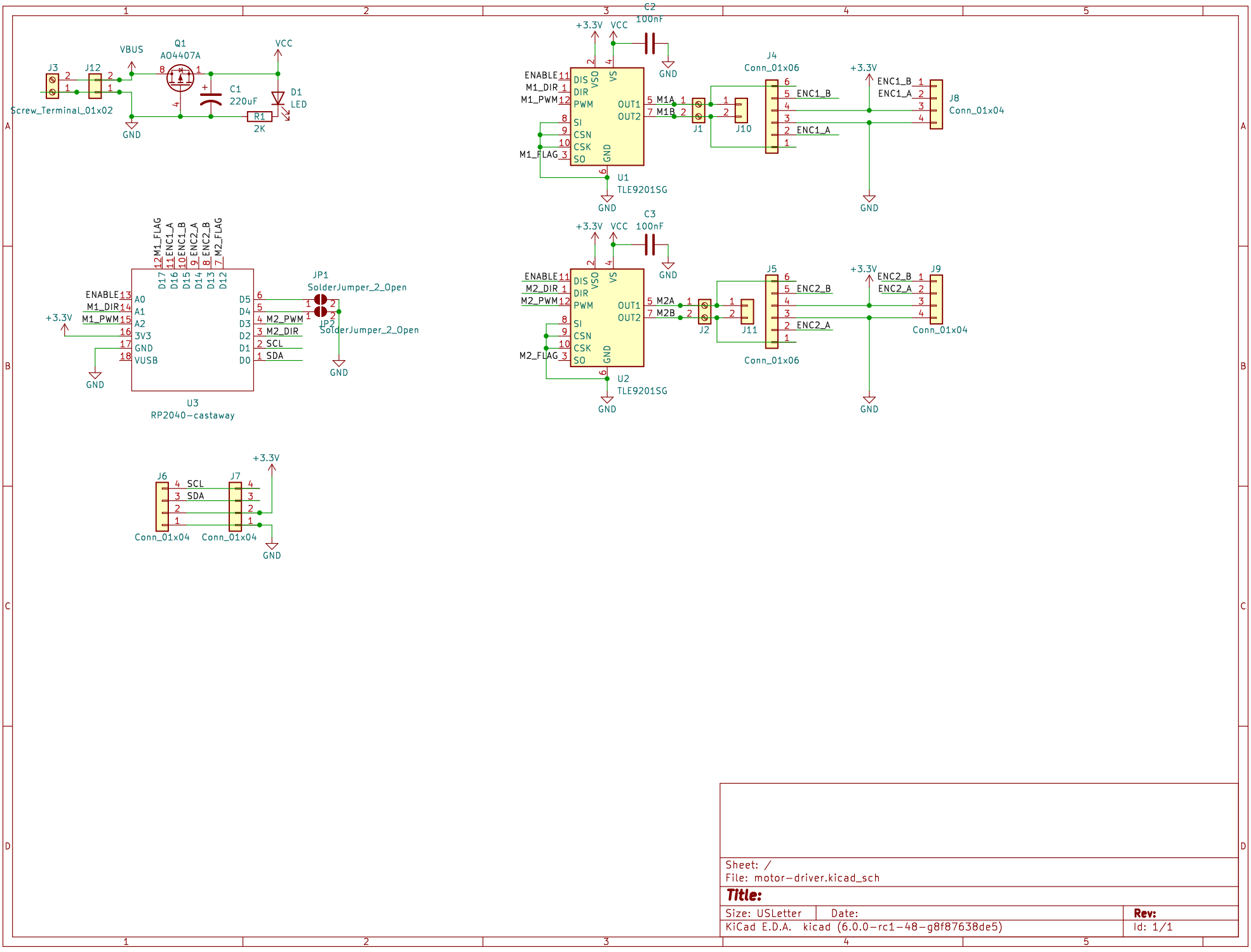

Sheet: /
File: motor-driver.kicad_sch

Title:

Size: USLetter	Date:	Rev:
KiCad E.D.A. kicad (6.0.0-rc1-48-g8f87638de5)		Id: 1/1