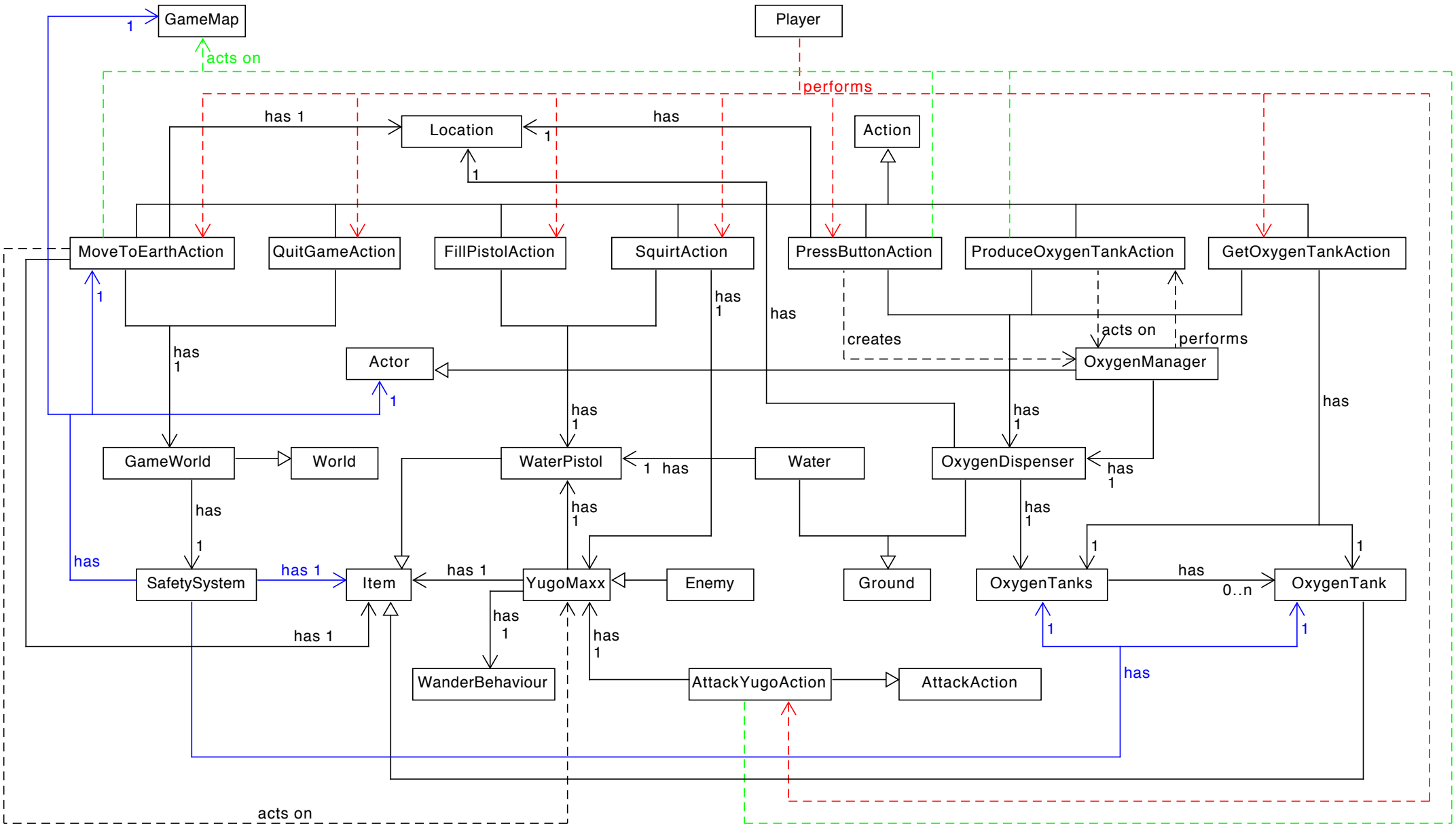

*Only new classes and related existing classes are shown