Introduction to Algorithms and Data Structures

week 5.2: Doubly Linked Lists

SAXION UNIVERSITY OF APPLIED SCIENCES

Deepdive into lists

- **Discuss work last lesson**
- Doubly linked list
- Exercises / Homework

- Where you able to do the exercises?
  1. Yes! All exercises are done!
  2. No.., Because I have these questions
  3. I haven't prioritized this subject enough at the moment to do the assignments

Deepdive into lists

- **Discuss work last lesson**
- **Doubly linked list**
- Exercises / Homework

Recap: (singly) Linked List

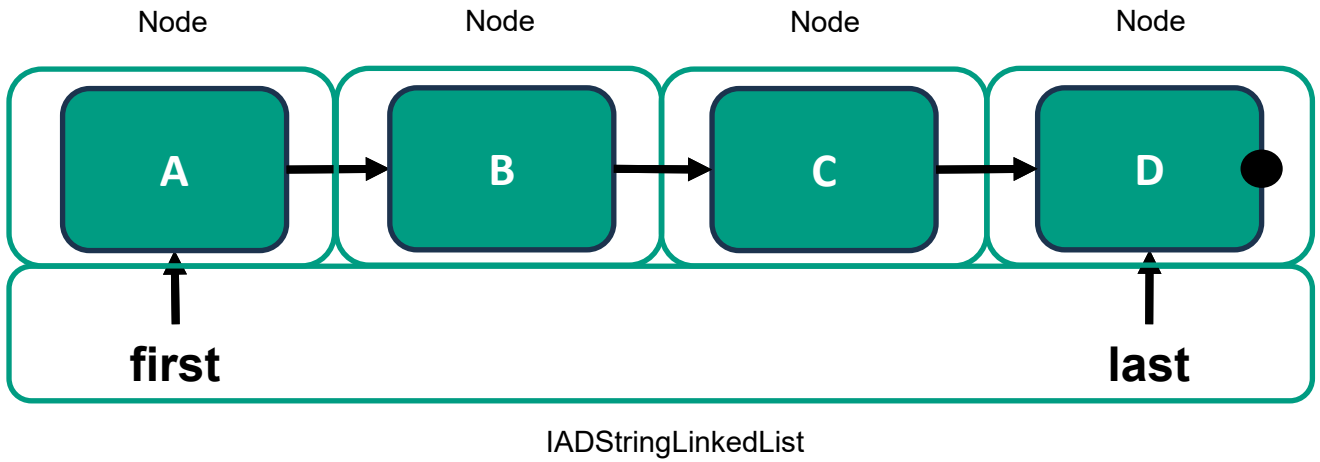

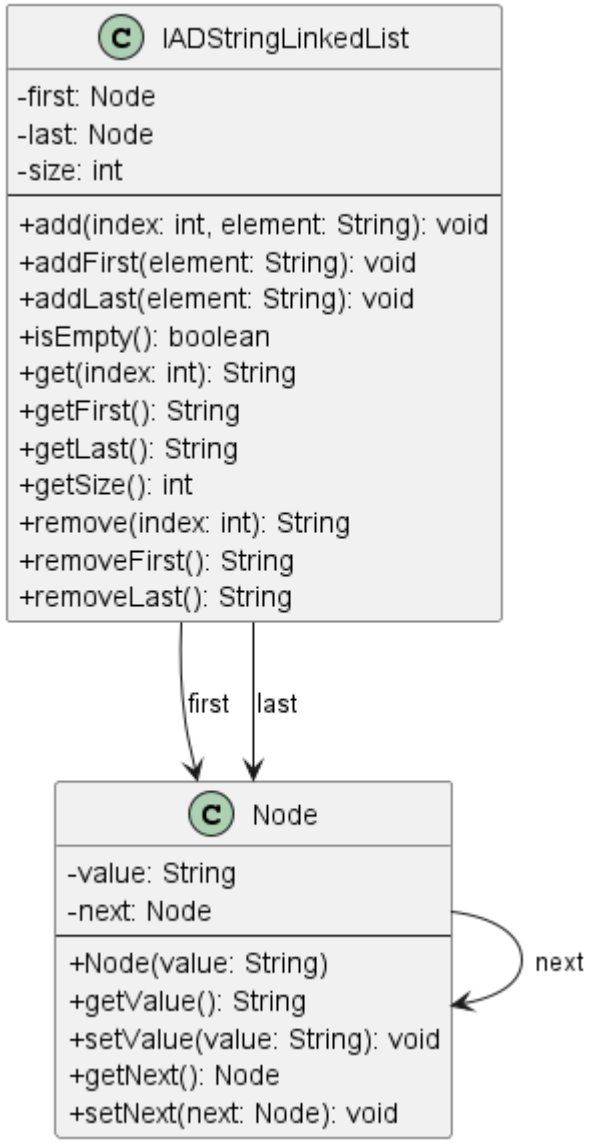

+ Easy front-to-back navigation
- Complex back-to-front navigation
- Removal requires looking up the previous element

Doubly Linked List

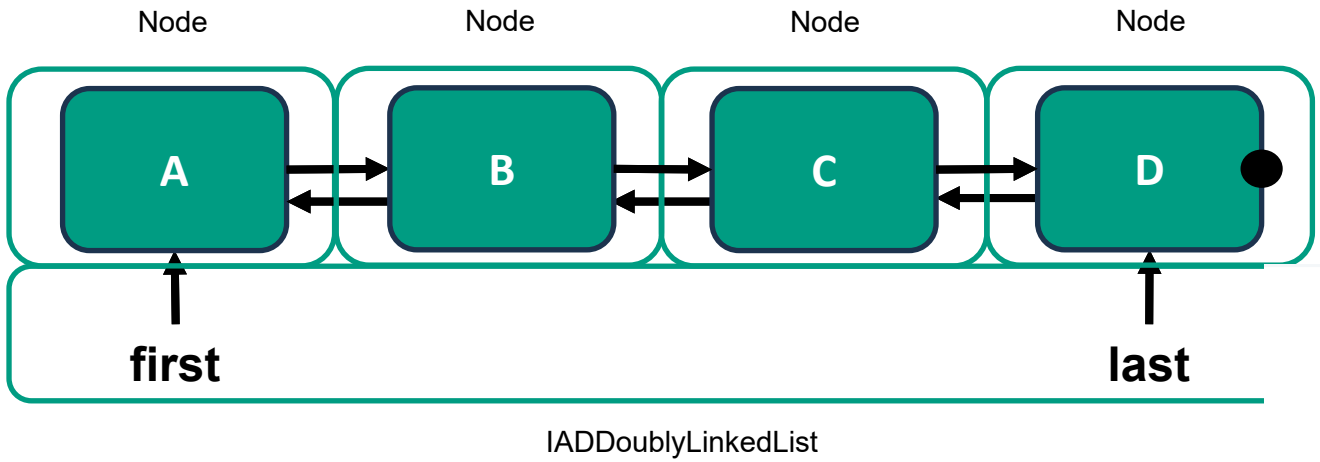

+ Effortless navigation both ways
+ No need to lookup previous element (e.g. when inserting)
- Adding / removing requires some additional effort

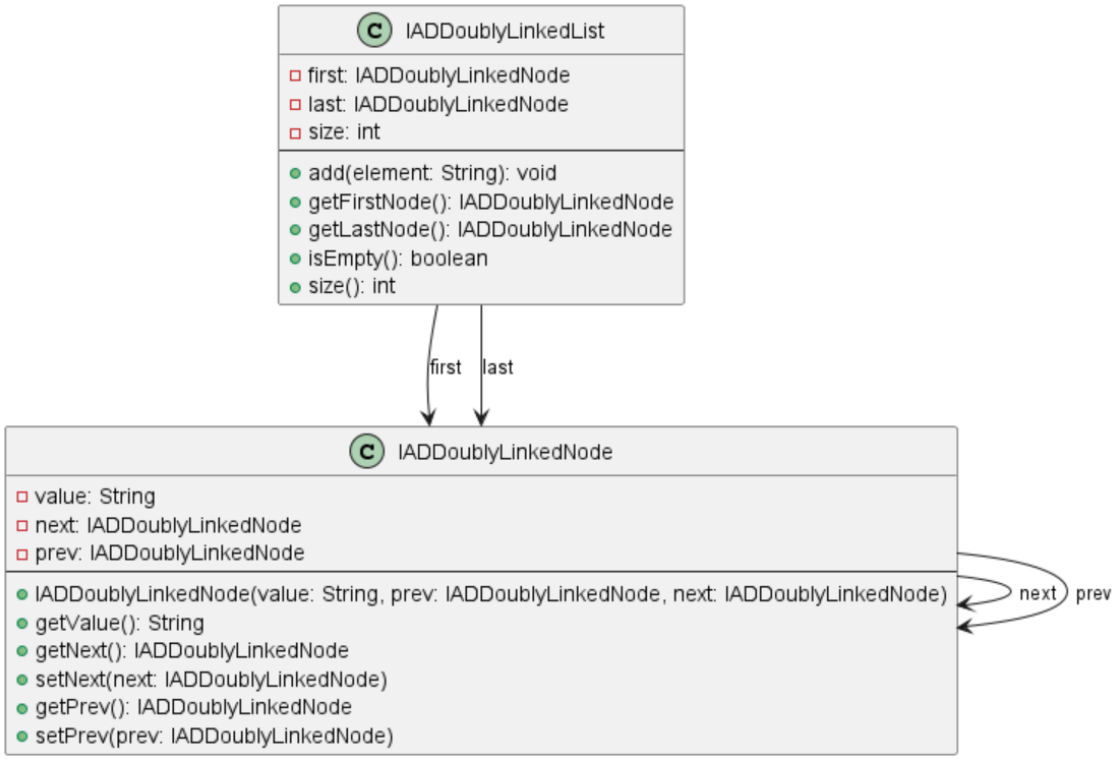

Examples

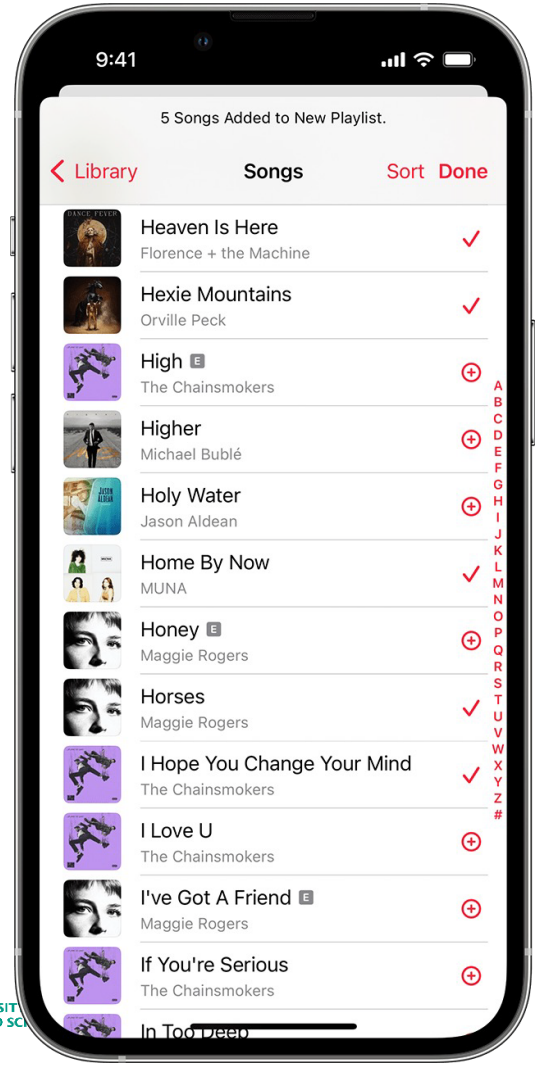
9:41
5 Songs Added to New Playlist.
Library
Songs
Sort
Done
Heaven Is Here
Florence + the Machine
Hexie Mountains
Orville Peck
High
The Chainsmokers
Higher
Michael Bublé
Holy Water
Jason Aldean
Home By Now
MUNA
Honey
Maggie Rogers
Horses
Maggie Rogers
I Hope You Change Your Mind
The Chainsmokers
I Love U
The Chainsmokers
I've Got A Friend
Maggie Rogers
If You're Serious
The Chainsmokers
In Too Deep
A B C D E F G H I J K L M N O P Q R S T U V W X Y Z #

Winter Wallpaper

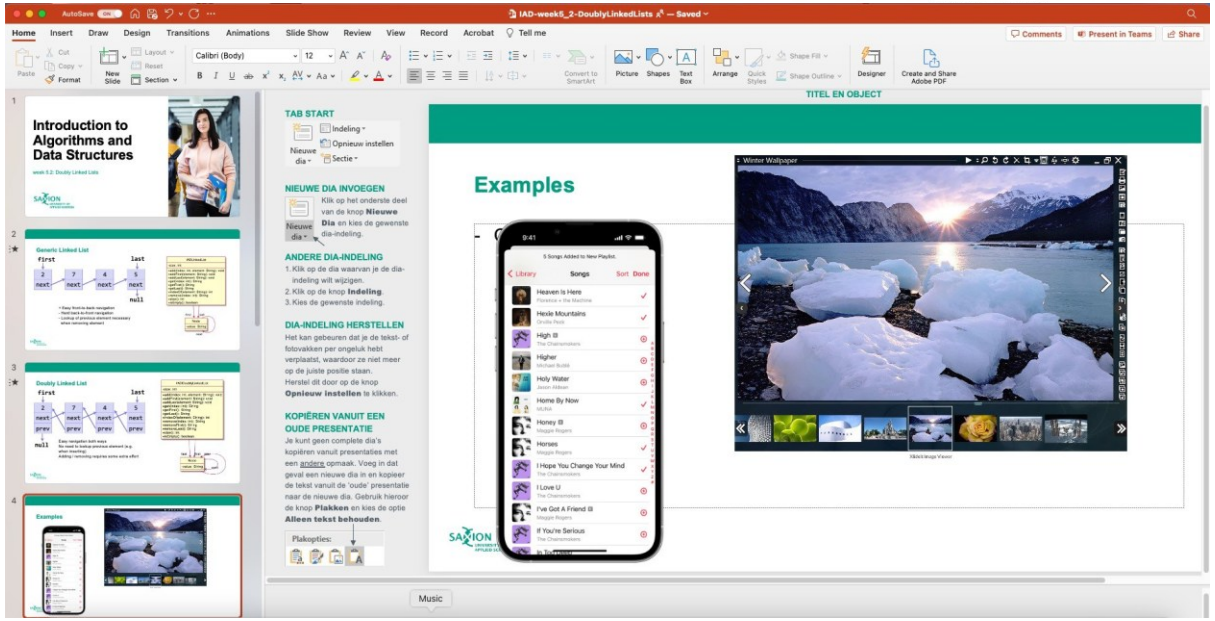
Introduction to Algorithms and Data Structures
TAB START
NIEUWE DIA INVOEGEN
ANDERE DIA-INDELING
DIA-INDELING HERSTELLEN
KOPIËREN VANUIT EEN OUDE PRESENTATIE
TITEL EN OBJECT
Examples
Music

Doubly Linked List: add (at end)

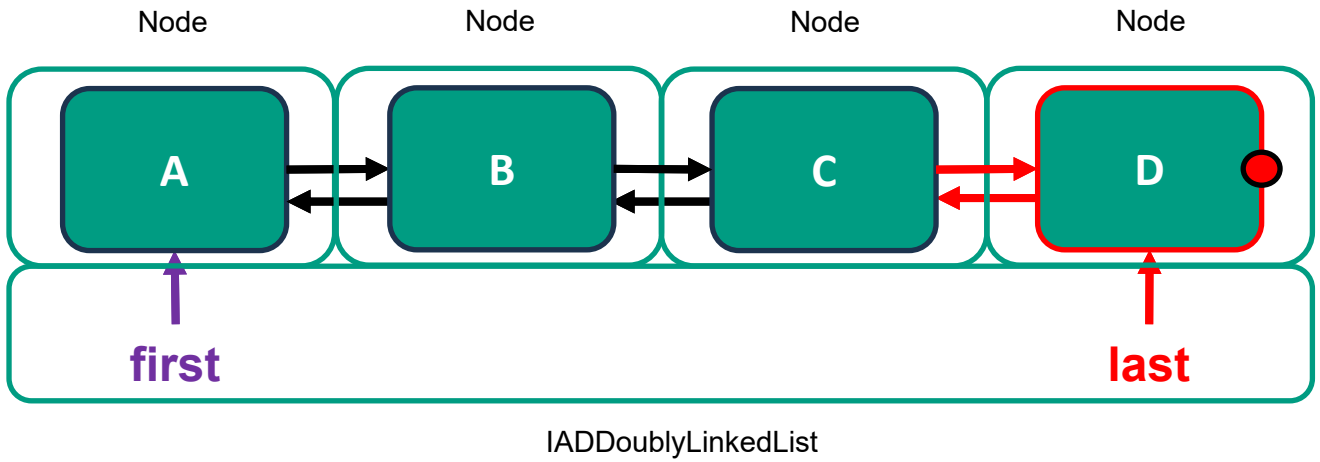

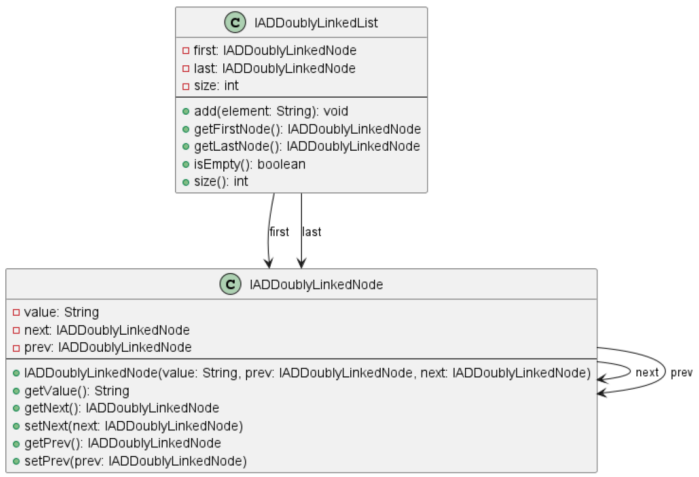

- New node D, previous is last (Node C)
- Node C.next is updated
- last is updated
- first may be updated (when?)

```java
public void add(String element) {
    IADDoublyLinkedNode newNode = new IADDoublyLinkedNode(element, last, next: null);
    if (isEmpty()) {
        first = newNode;
    } else {
        last.setNext(newNode);
    }
    last = newNode;
    ++size;
}
```

Doubly Linked List: remove

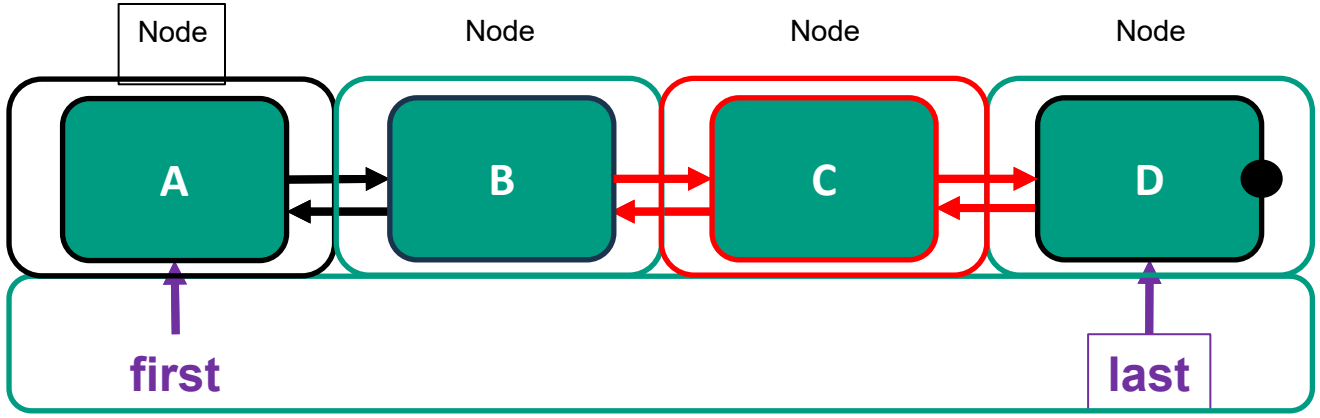

IADDoublyLinkedList

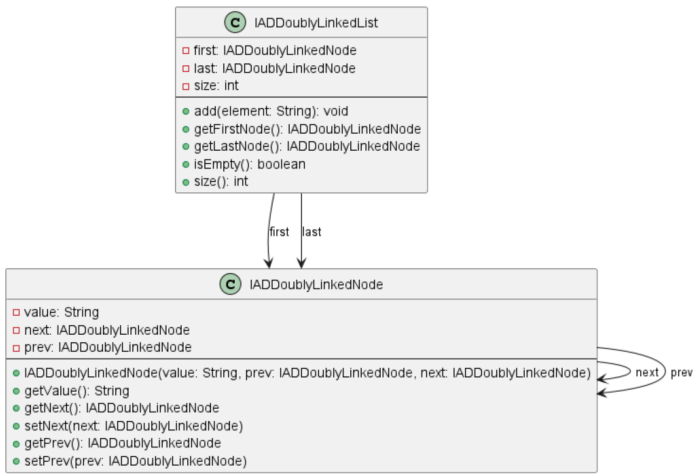

- Remove Node C
- Node B.next and node D.prev are updated (and when not)
- Edge cases (last & first may be updated):
  remove last, remove first, remove only node (first/last) of the list

Deepdive into lists

- **Discuss work last lesson**
- **Doubly linked list**
- Exercises / Homework

Now it’s your turn!