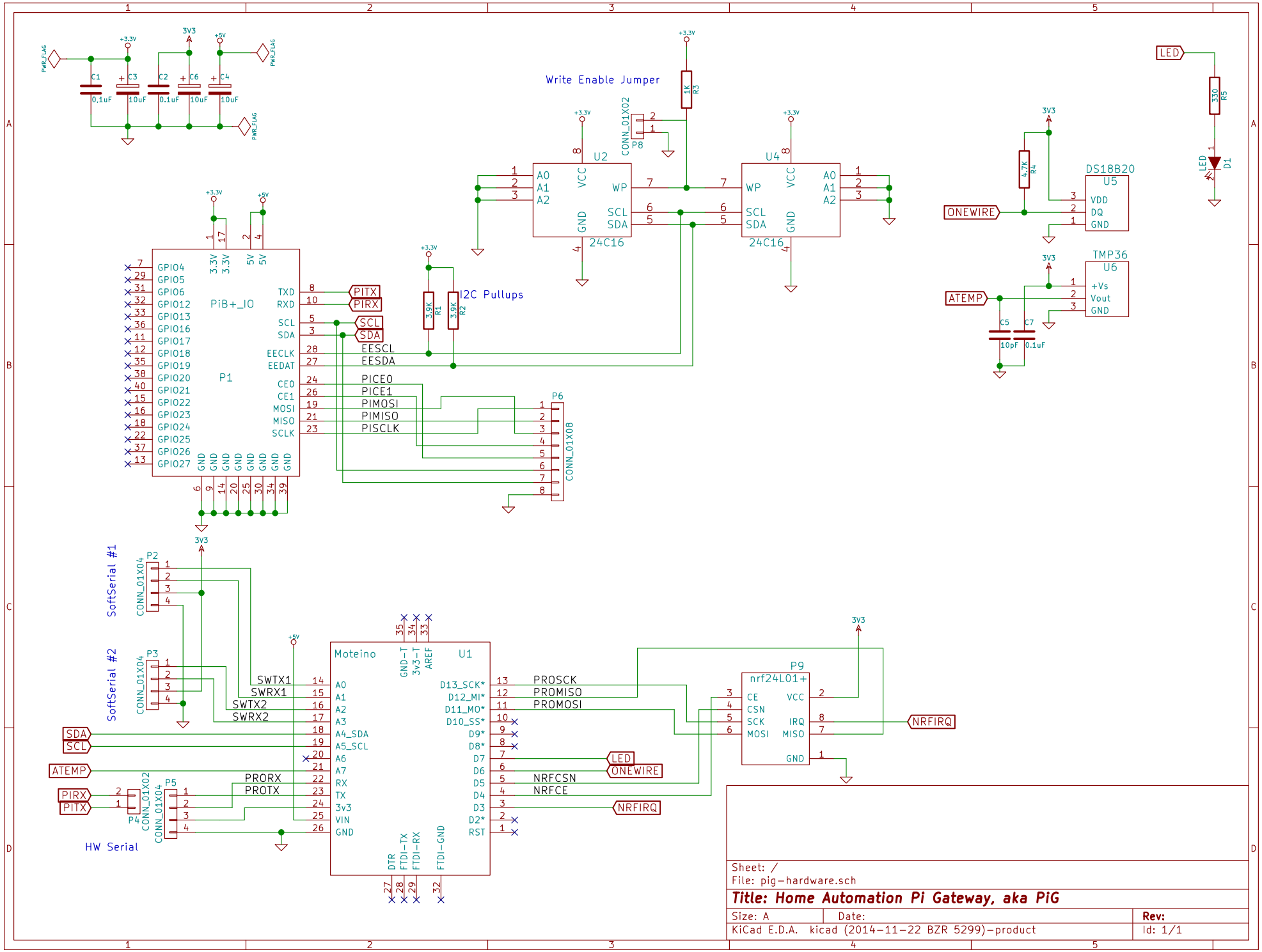

Sheet: /
File: pig-hardware.sch

Title: Home Automation Pi Gateway, aka PiG

Size: A	Date:	Rev:
KiCad E.D.A. kicad (2014-11-22 BZR 5299)-product		Id: 1/1