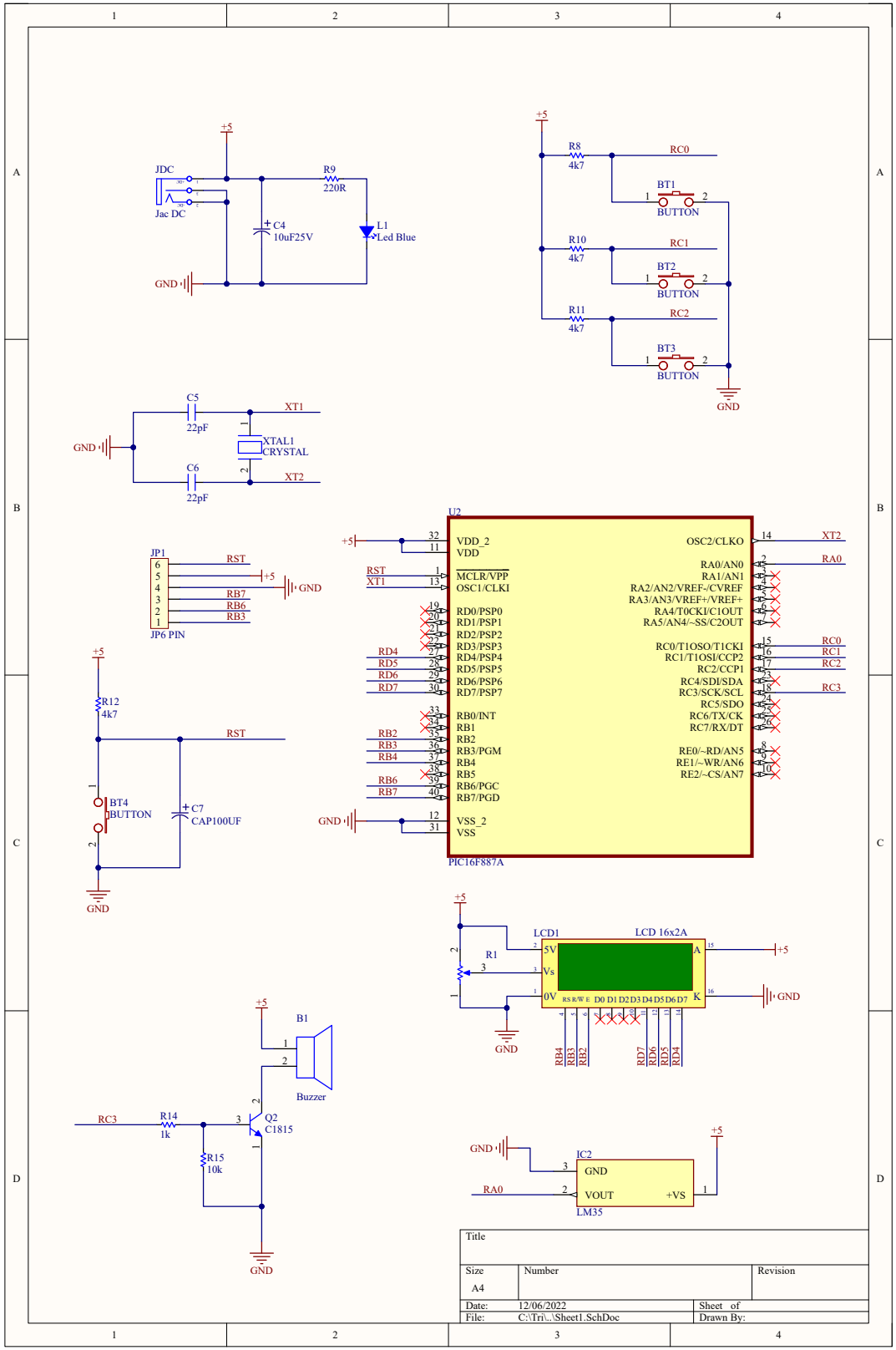
JDC
Jac DC
+5
R9
220R
C4
10uF25V
L1
Led Blue
GND
R8
4k7
RC0
BT1
BUTTON
R10
4k7
RC1
BT2
BUTTON
R11
4k7
RC2
BT3
BUTTON
C5
22pF
XT1
XTAL1
CRYSTAL
C6
22pF
XT2
JP1
JP6 PIN
RST
RB7
RB6
RB3
U2
VDD_2
VDD
MCLR/VPP
OSC1/CLKI
RD0/PSP0
RD1/PSP1
RD2/PSP2
RD3/PSP3
RD4/PSP4
RD5/PSP5
RD6/PSP6
RD7/PSP7
RB0/INT
RB1
RB2
RB3/PGM
RB4
RB5
RB6/PGC
RB7/PGD
VSS_2
VSS
OSC2/CLKO
RA0/AN0
RA1/AN1
RA2/AN2/VREF-/CVREF
RA3/AN3/VREF+/VREF+
RA4/T0CKI/C1OUT
RA5/AN4/~SS/C2OUT
RC0/T1OSO/T1CKI
RC1/T1OSI/CCP2
RC2/CCP1
RC4/SDI/SDA
RC3/SCK/SCL
RC5/SDO
RC6/TX/CK
RC7/RX/DT
RE0/~RD/AN5
RE1/~WR/AN6
RE2/~CS/AN7
PIC16F887A
R12
4k7
BT4
BUTTON
C7
CAP100UF
LCD1
LCD 16x2A
R1
B1
Buzzer
RC3
R14
1k
R15
10k
Q2
C1815
IC2
GND
VOUT
+VS
LM35
Title
Size
A4
Number
Revision
Date: 12/06/2022
Sheet of
File: C:\Tri\..\Sheet1.SchDoc
Drawn By: