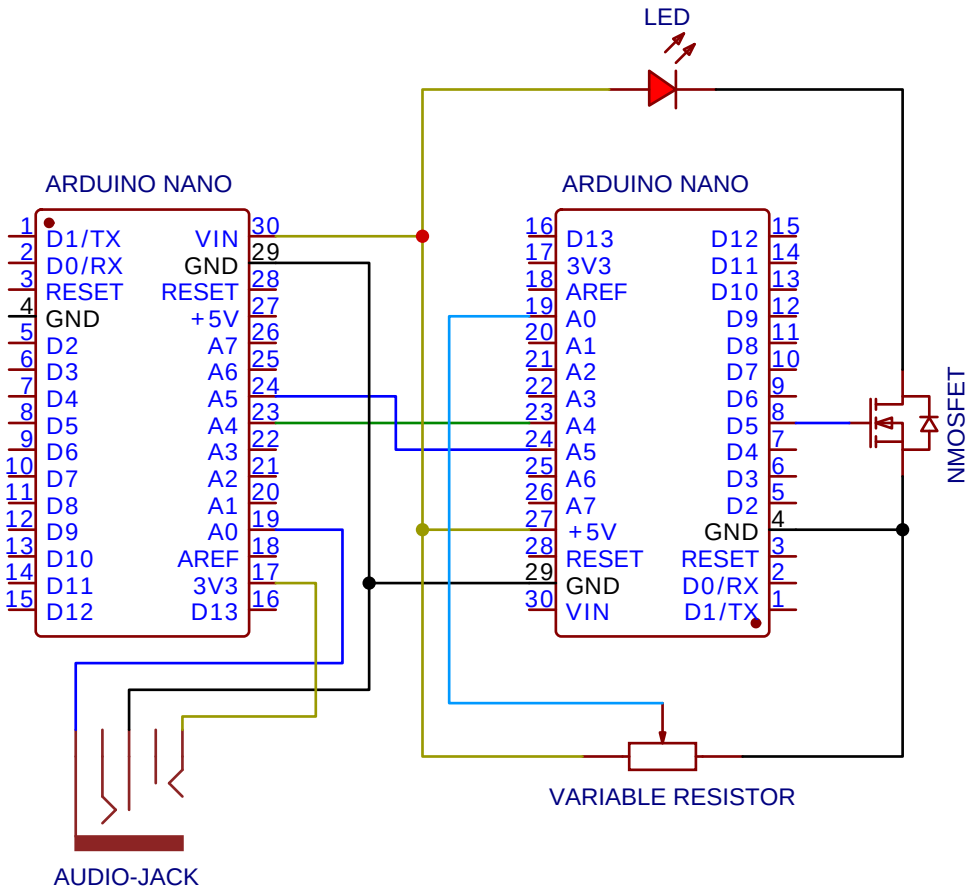

TITLE: NanoStrobe	REV: 1.0
Company: Nope	Sheet: 1/1
Date: 2022-10-08 Drawn By:	

嘉立创EDA