STRUCTURAL DETAILS – PIPE SUPPORTS (CS-2620-001)

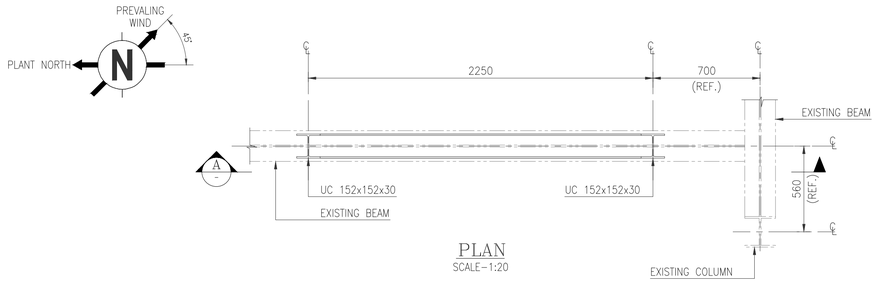

PLAN
SCALE-1:20

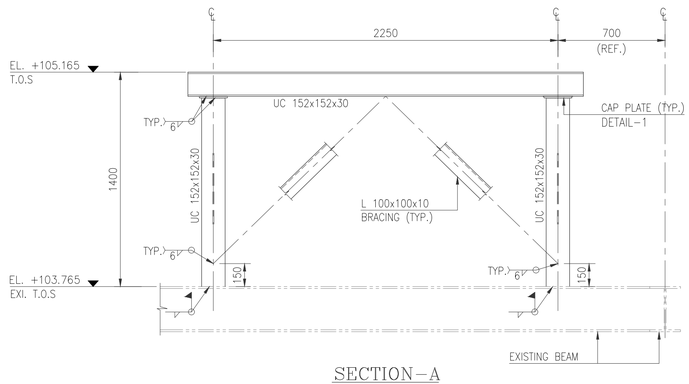

SECTION-A
SCALE-1:20

STRUCTURAL DETAILS – PIPE SUPPORTS (CS-2620-002 & CS-2620-003)

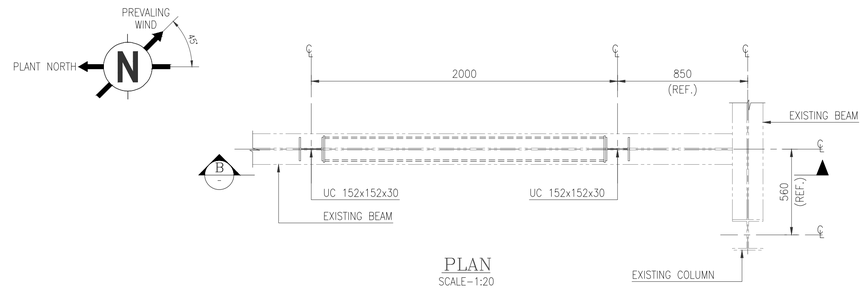

PLAN
SCALE-1:20

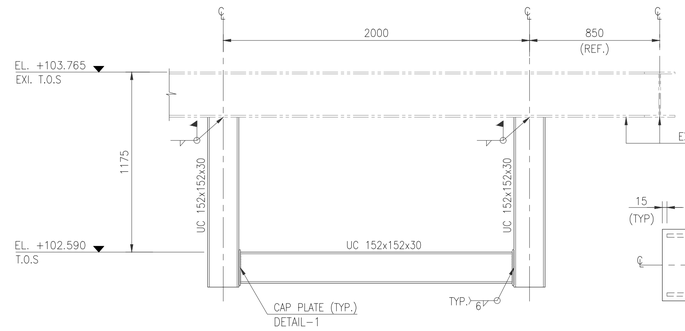

SECTION-B
SCALE-1:20

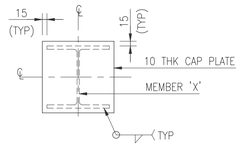

DETAIL-1
CAP PLATE
SCALE-1:10

NOTES

1. ALL DIMENSIONS ARE IN MILLIMETERS, CO-ORDINATES ARE IN METERS UNLESS OTHERWISE NOTED.
2. ALL STRUCTURAL STEEL SHALL BE CORROSION PROTECTED & PAINTED IN ACCORDANCE WITH COMPANY SPECIFICATION AGES-SP-01-002.
3. PC CONTRACTOR TO SUBMIT SHOP DRAWINGS FOR COMPANY APPROVAL BEFORE FABRICATION.
4. FOR STEEL WORKS GENERAL NOTES, REFER TO AGES-STD-01-201.
5. PC CONTRACTOR SHALL VERIFY PIPE SUPPORT LOCATION AND TAG NUMBER REFERENCE TO LATEST PIPING PLANS.
6. PC CONTRACTOR SHALL VERIFY THE LOCATION OF EXISTING FACILITIES SUCH AS PIPES, CABLES, TRAYS etc. BEFORE ERECTION AT SITE.

LEGENDS

T.O.S	–	TOP OF STEEL
THK.	–	THICK
EXI.	–	EXISTING
EL.	–	ELEVATION
TYP.	–	TYPICAL
REF.	–	REFERENCE
℄	–	CENTERLINE

STRUCTURAL DETAILS – PIPE SUPPORTS (CS-2620-004 & CS-2620-005)

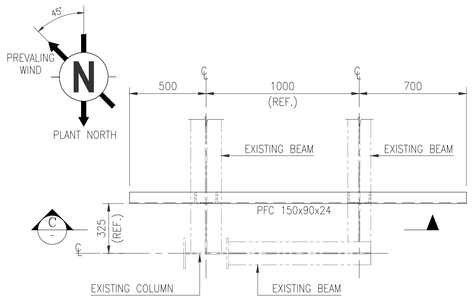

PLAN
SCALE-1:20

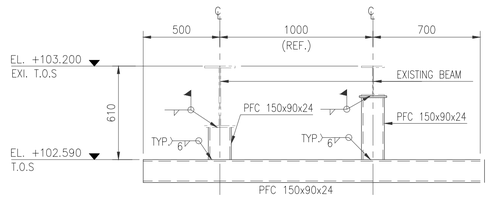

SECTION-C
SCALE-1:20

STRUCTURAL DETAILS – PIPE SUPPORTS (CS-2620-007)

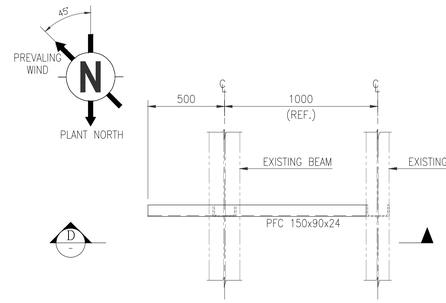

PLAN
SCALE-1:20

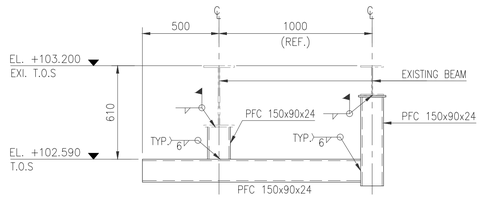

SECTION-D
SCALE-1:20

STRUCTURAL DETAILS – PIPE SUPPORTS (CS-2620-006)

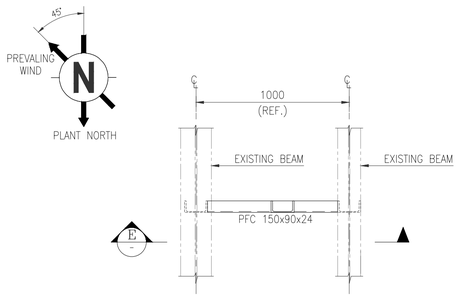

PLAN
SCALE-1:20

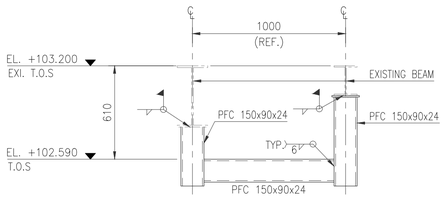

SECTION-E
SCALE-1:20

STRUCTURAL DETAILS – PIPE SUPPORTS (CS-2620-009 & CS-2620-010)

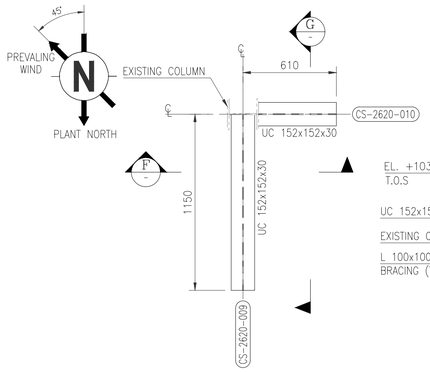

PLAN
SCALE-1:20

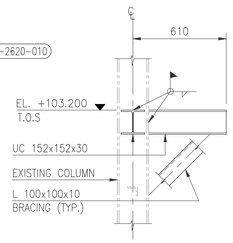

SECTION-F
SCALE-1:20

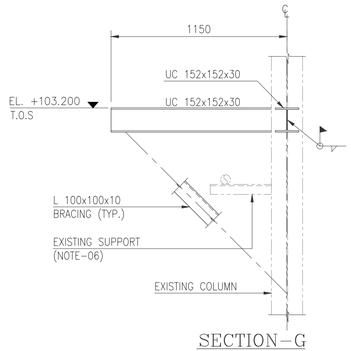

SECTION-G
SCALE-1:20

0 0.8m
SCALE-1:20

DRAWING REFERENCE

TITLE	DRG. No.
PIPING PLAN COKE CALCINATION – UNIT 2620	5636-2620-PU-E-1180
PIPING PLAN COKE CALCINATION – UNIT 2620	5636-2620-PU-E-1185
PIPING ISOMETRICS	5636-2620-PU-B-5116-114
PIPING PLAN COKE CALCINATION – UNIT 2620	5636-2620-PU-E-1306
PIPERACK- R621 FRAMING PLAN-1 COKE CALCINATION – UNIT 2620	1349001

THIS DRAWING IS NEWLY PREPARED UNDER THE PROJECT AET01347.00

REV.	DATE	DESCRIPTION	DRN.	CHK.	ENG.	APP.
B	02.09.2025	ISSUED FOR APPROVAL	MMK	KHA	SCH	RF
A	29.05.2025	ISSUED FOR CLIENT REVIEW	PRV	KHA	SCH	RF

DRAWN: MMK | CHECKED: KHA | SCALE: AS SHOWN | SHEET SIZE: A1

WORK ORDER NO.: 4500311665

CLIENT: ADNOC

ADNOC Refining

CONSULTANT: BILFINGER TERODIN

CONTRACTOR: DESCON

BTME PROJECT NUMBER	SUB NUMBER	BTME DRAWING NUMBER
AET01347	00	1349001

PROJECT:

INSTALLATION OF UPGRADED COKE COOLER INCLUDING AIR SWEEP SYSTEM MODIFICATION

DRAWING TITLE:

STRUCTURAL DETAILS
PIPE SUPPORTS
COKE CALCINATION – UNIT 2620

ADNOC REFINING DRAWING NUMBER	SHEET No.	REVISION
XXXX	01 OF 03	B

CAD FILE NAME: 1349001.DWG

\\10.161.144.32\TME_SHARE\CAD\AET01347.00\11.00 CIVIL & ARCHITECTURAL\11.72 CONCRETE STRUCT\COKE COOLER\PIPE SUPPORT\1349001.DWG, 02/09/2025, 09:43, DM267097.

STRUCTURAL DETAILS – PIPE SUPPORTS (CS-2620-008)

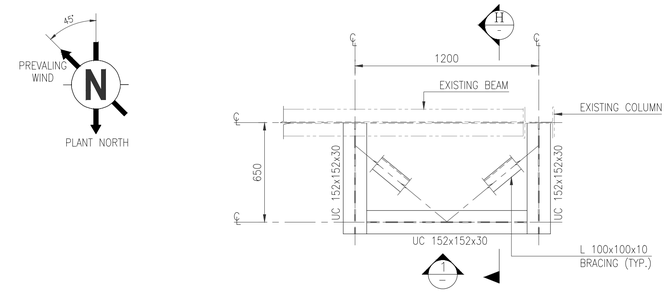

PLAN
SCALE-1:20

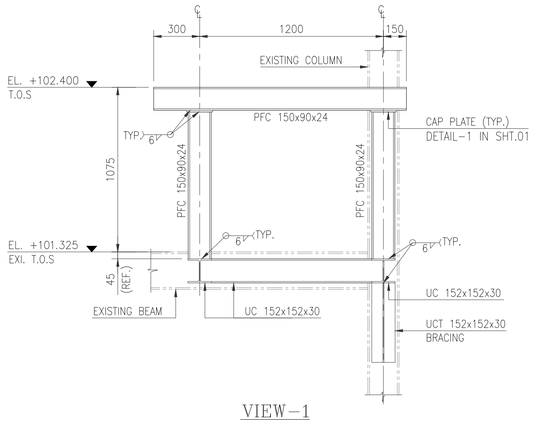

VIEW-1
SCALE-1:20

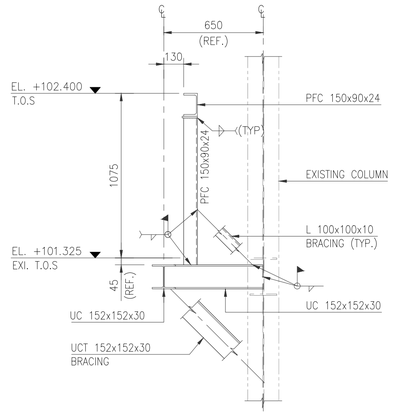

SECTION-H
SCALE-1:20

STRUCTURAL DETAILS – PIPE SUPPORTS (CS-2620-011 & CS-2620-011A)

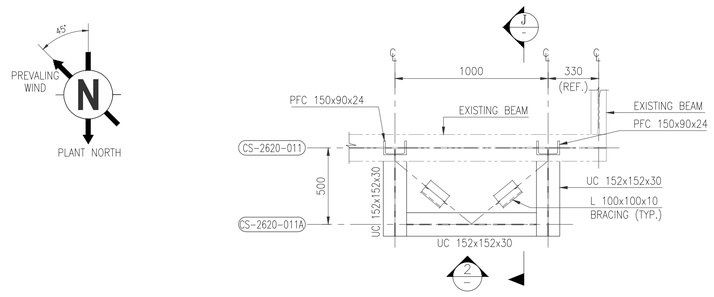

PLAN
SCALE-1:20

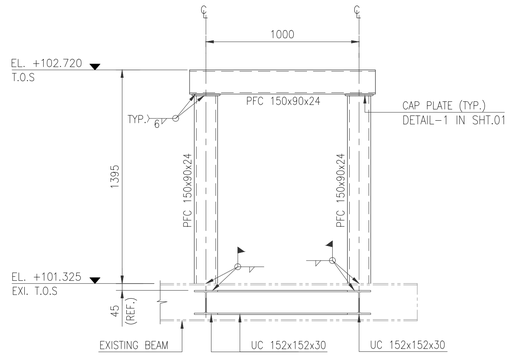

VIEW-2
SCALE-1:20

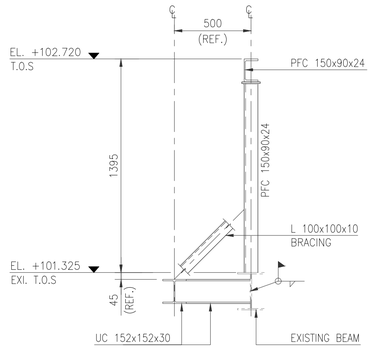

SECTION-J
SCALE-1:20

NOTES

1. ALL DIMENSIONS ARE IN MILLIMETERS, CO-ORDINATES ARE IN METERS UNLESS OTHERWISE NOTED.
2. FOR ALL OTHER NOTES REFER SHT-01.

LEGENDS

T.O.S	–	TOP OF STEEL
THK.	–	THICK
EXI.	–	EXISTING
EL.	–	ELEVATION
TYP.	–	TYPICAL
REF.	–	REFERENCE
℄	–	CENTERLINE

DRAWING REFERENCE

TITLE	DRG. No.
PIPING PLAN COKE CALCINATION – UNIT 2620	5636-2620-PU-E-1180
PIPING PLAN COKE CALCINATION – UNIT 2620	5636-2620-PU-E-1185
PIPING ISOMETRICS	5636-2620-PU-B-5116-114
PIPING PLAN COKE CALCINATION – UNIT 2620	5636-2620-PU-E-1306
PIPERACK- R621 FRAMING PLAN-1 COKE CALCINATION – UNIT 2620	1349001

THIS DRAWING IS NEWLY PREPARED UNDER THE PROJECT AET01347.00

STRUCTURAL DETAILS – PIPE SUPPORTS (CS-2620-1013 & CS-2620-1014)

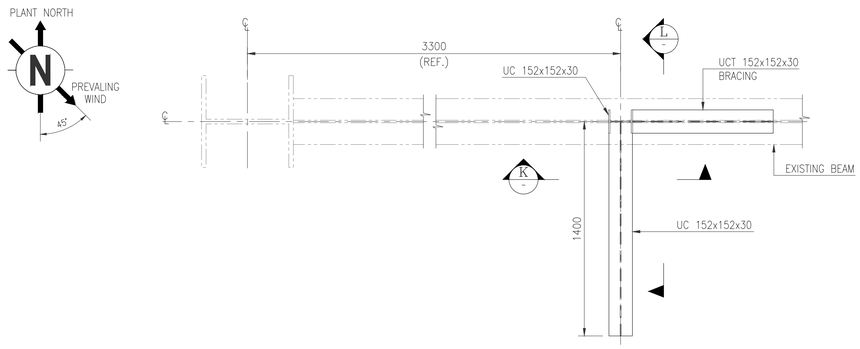

PLAN
SCALE-1:20

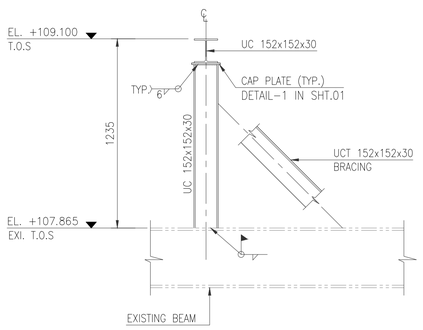

SECTION-K
SCALE-1:20

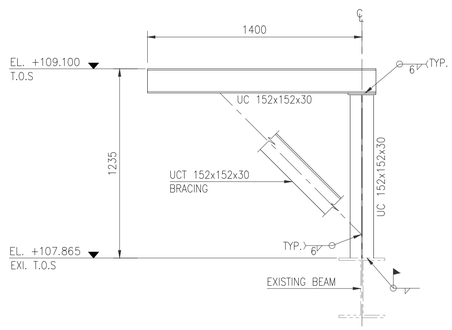

SECTION-L
SCALE-1:20

STRUCTURAL DETAILS – PIPE SUPPORTS (CS-2620-012)

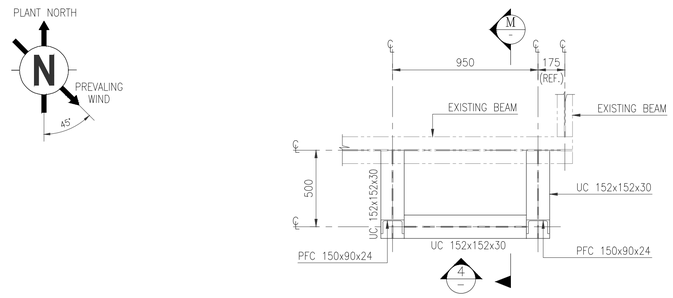

PLAN
SCALE-1:20

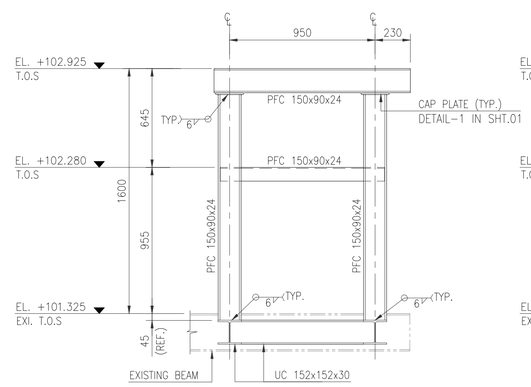

VIEW-4
SCALE-1:20

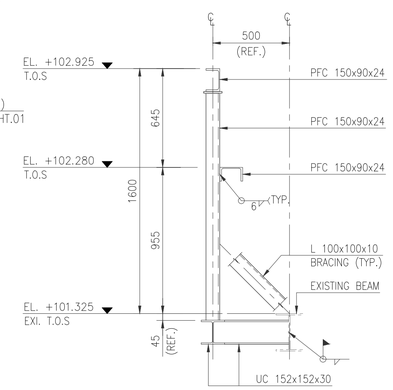

SECTION-M
SCALE-1:20

0 0.8m
SCALE-1:20

REV.	DATE	DESCRIPTION	DRN.	CHK.	ENG.	APP.
B	02.09.2025	ISSUED FOR APPROVAL	MMK	KHA	SCH	RF
A	29.05.2025	ISSUED FOR CLIENT REVIEW	PRV	KHA	SCH	RF

DRAWN: MMK | CHECKED: KHA | SCALE: 1:20 | SHEET SIZE: A1

WORK ORDER NO.: 4500311665

CLIENT: ADNOC

ADNOC Refining

CONSULTANT: BILFINGER TEBODIN

CONTRACTOR: DESCON

BTME PROJECT NUMBER	SUB NUMBER	BTME DRAWING NUMBER
AET01347	00	1349001

PROJECT:

INSTALLATION OF UPGRADED COKE COOLER INCLUDING AIR SWEEP SYSTEM MODIFICATION

DRAWING TITLE:

STRUCTURAL DETAILS
PIPE SUPPORTS
COKE CALCINATION – UNIT 2620

ADNOC REFINING DRAWING NUMBER	SHEET No.	REVISION
XXXX	02 OF 03	A

CAD FILE NAME: 1349001.DWG

\\10.161.144.32\TME_SHARE\CAD\AET01347.00\11.00 CIVIL & ARCHITECTURAL\11.72 CONCRETE STRUCT\COKE COOLER\PIPE SUPPORT\1349001.DWG, 02/09/2025, 09:43, ID267097.

STRUCTURAL DETAILS – PIPE SUPPORTS (CS-2620-1015) & (CS-2620-1016)

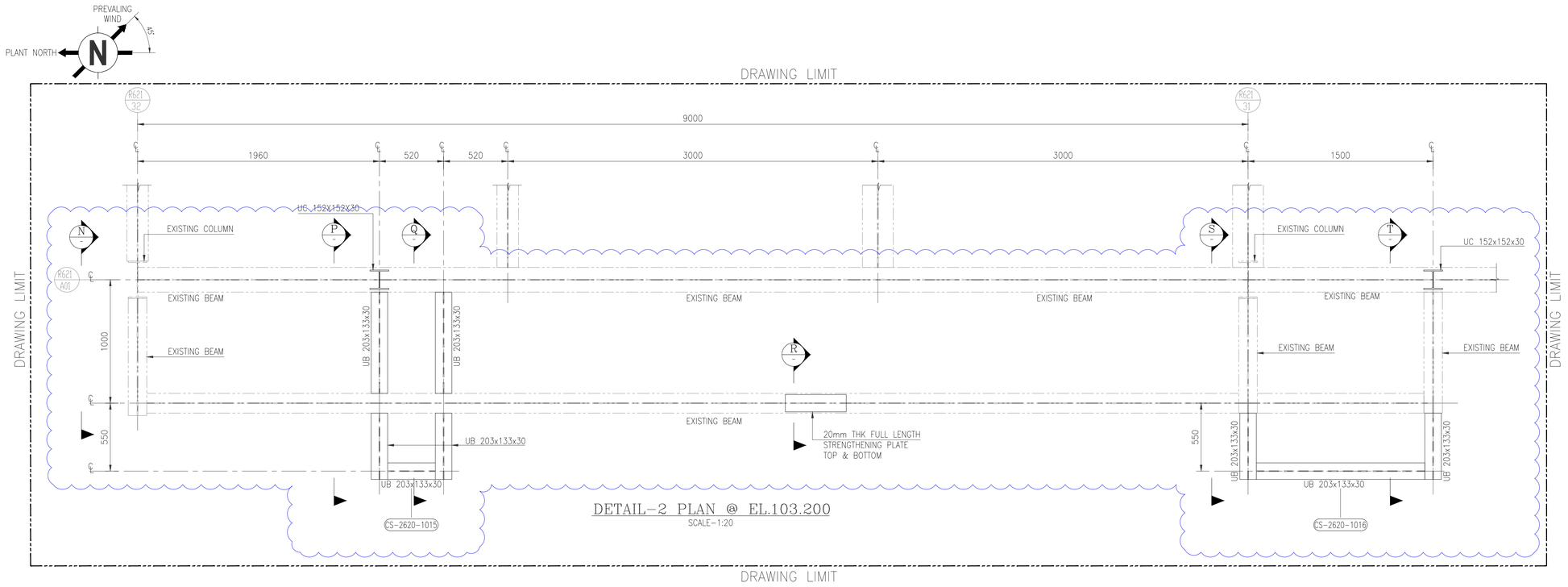

DETAIL-2 PLAN @ EL.103.200
SCALE-1:20

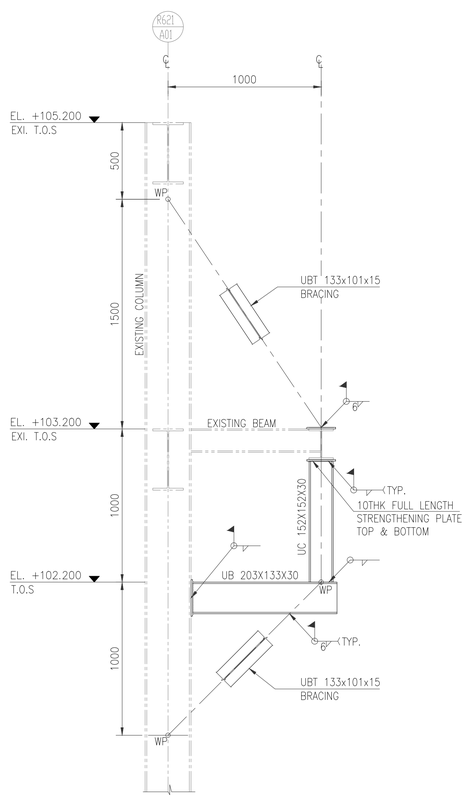

SECTION-N
SCALE-1:20

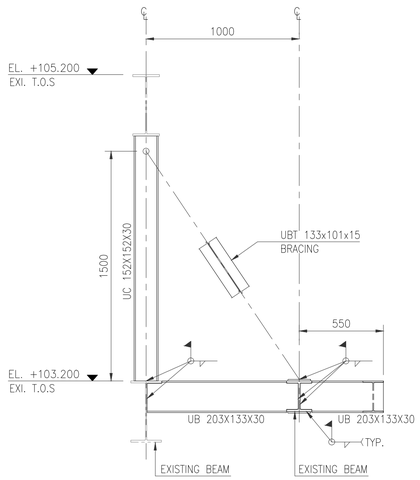

SECTION-P
SCALE-1:20

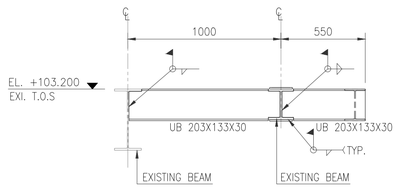

SECTION-Q
SCALE-1:20

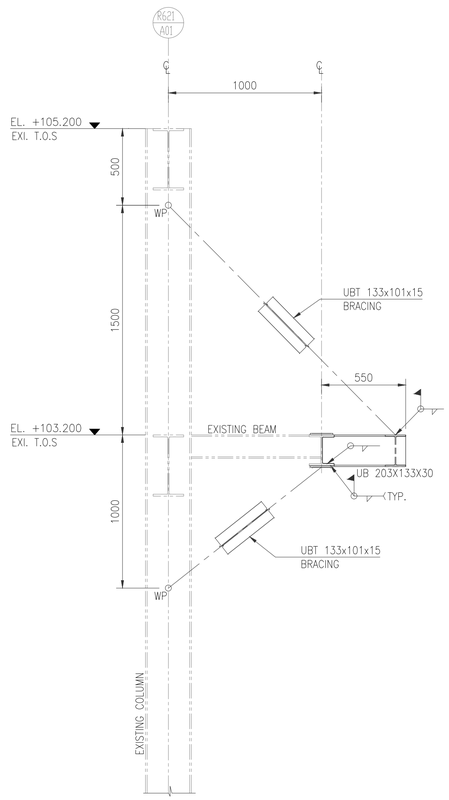

SECTION-S
SCALE-1:20

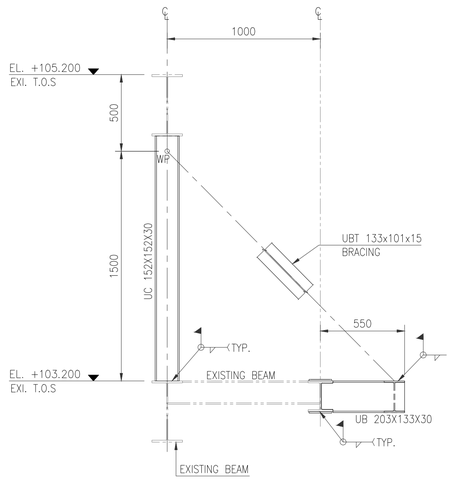

SECTION-T
SCALE-1:20

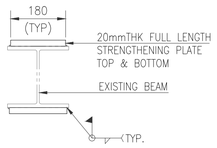

SECTION-R
SCALE-1:10

0 0.8m
SCALE-1:20

NOTES

1. ALL DIMENSIONS ARE IN MILLIMETERS, CO-ORDINATES ARE IN METERS UNLESS OTHERWISE NOTED.
2. FOR ALL OTHER NOTES REFER SHT-01.
3. PC CONTRACTOR SHALL VERIFY THE EXISTING BEAM/COLUMN SIZES BEFORE ERECTION.

LEGENDS

T.O.S	–	TOP OF STEEL
THK.	–	THICK
EXI.	–	EXISTING
EL.	–	ELEVATION
TYP.	–	TYPICAL
REF.	–	REFERENCE
℄	–	CENTERLINE
WP.	–	WORK POINT

– SCOPE CLOUD
– REVISION CLOUD

DRAWING REFERENCE

TITLE	DRG. No.
PIPING PLAN COKE CALCINATION – UNIT 2620	5636-2620-PU-E-1180
PIPING PLAN COKE CALCINATION – UNIT 2620	5636-2620-PU-E-1185
PIPING ISOMETRICS	5636-2620-PU-B-5116-114
PIPING PLAN COKE CALCINATION – UNIT 2620	5636-2620-PU-E-1306
PIPERACK- R621 FRAMING PLAN-1 COKE CALCINATION – UNIT 2620	1349001

THIS DRAWING IS NEWLY PREPARED UNDER THE PROJECT AET01347.00

B

REV.-B
THIS SHEET IS NEWLY ADDED, HENCE NOT CLOUDED

REV.	DATE	DESCRIPTION	DRN.	CHK.	ENG.	APP.
B	02.09.2025	ISSUED FOR APPROVAL	MMK	KHA	SCH	RF
A	–	NOT ISSUED	–	–	–	–

DRAWN: MMK | CHECKED: KHA | SCALE: 1:20 | SHEET SIZE: A1

WORK ORDER NO.: 4500311665

CLIENT: ADNOC — ADNOC Refining

CONSULTANT: BILFINGER, TEBODIN

CONTRACTOR: DESCON

BTME PROJECT NUMBER	SUB NUMBER	BTME DRAWING NUMBER
AET01347	00	1349001

PROJECT:

INSTALLATION OF UPGRADED COKE COOLER INCLUDING AIR SWEEP SYSTEM MODIFICATION

DRAWING TITLE:

STRUCTURAL DETAILS
PIPE SUPPORTS
COKE CALCINATION – UNIT 2620

ADNOC REFINING DRAWING NUMBER	SHEET No.	REVISION
XXXX	03 OF 03	B

CAD FILE NAME: 1349001.DWG

\\10.161.144.32\TME_SHARE\CAD\AET01347.00\11.00 CIVIL & ARCHITECTURAL\11.72 CONCRETE STRUCT\COKE COOLER\PIPE SUPPORT\1349001.DWG, 02/09/2025, 10:05, DM267097.