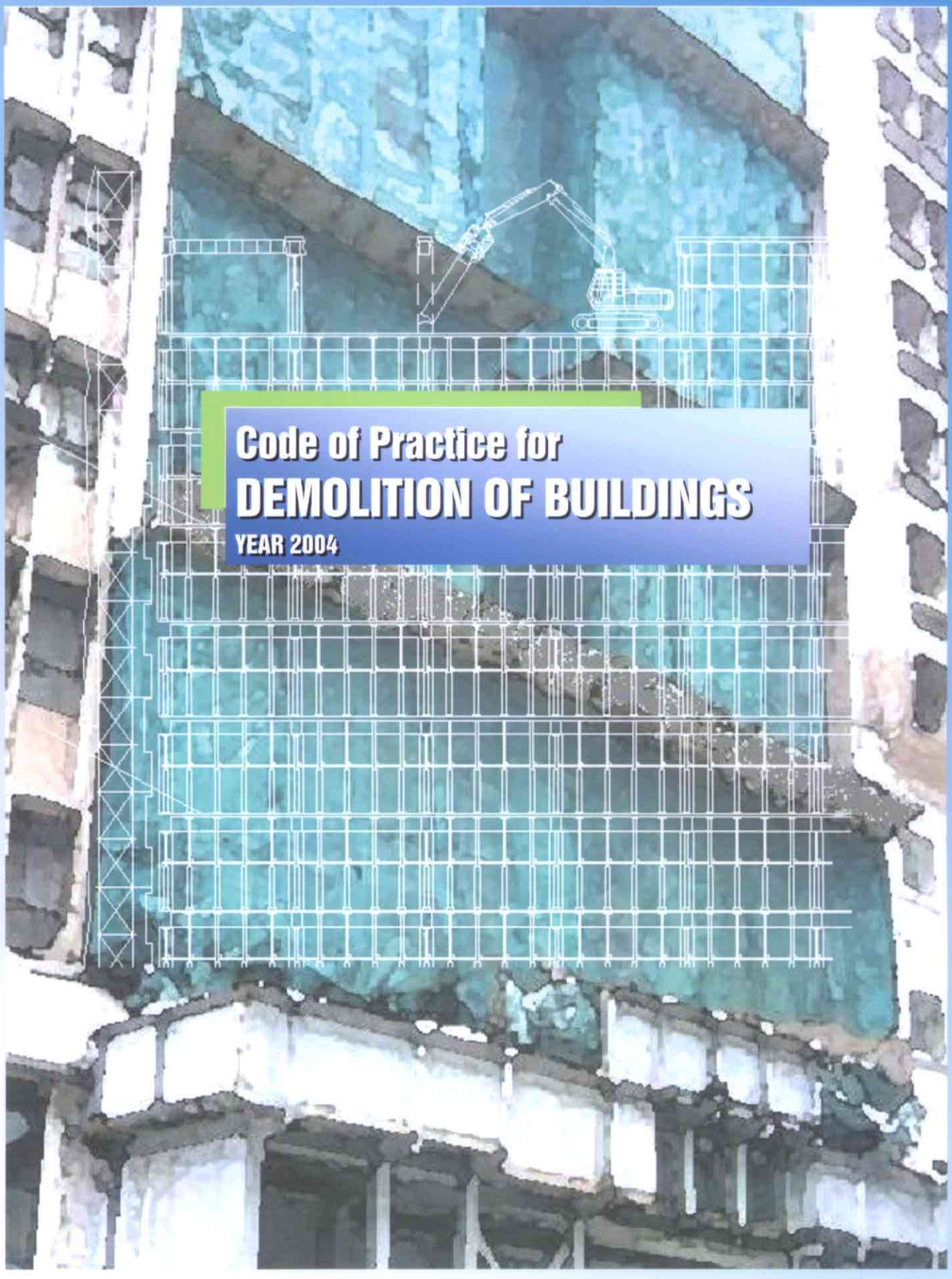

Code of Practice for DEMOLITION OF BUILDINGS

YEAR 2004

屋宇署
BUILDINGS DEPARTMENT

努力不懈 突破目標
We Go the Extra Mile

CODE OF PRACTICE

FOR

DEMOLITION OF BUILDINGS

2004

FOREWORD

The Draft Code of Practice for Demolition of Buildings was first issued in February 1998 to provide guidance on safe and good practices for demolition works and for compliance with the requirements of the relevant provisions of the Building (Administration) Regulations and Building (Demolition works) Regulations relating to demolition works.

Throughout the years since its adoption, the Draft Code has been well received by the practitioners. Besides, they have been offering valuable comments on the use of the Draft Code based on their experience gained from its application. The Buildings Department has considered and adopted their constructive views in the present review of the Draft Code which has thus been refined and adopted as this Code of Practice.

The Code contains basic information for the practitioners on better planning and control when carrying out demolition works. It also includes the latest development of the regulatory control on site supervision for demolishing complex structures. This Code should be read and used in conjunction with the Buildings Ordinance and the aforesaid Regulations when preparing demolition plans for approval by the Building Authority. Users of the Code should exercise their own professional judgement in the application of this Code in selecting the most suitable demolition method.

Buildings Department
2004

Table of Contents

		Page
1.	**GENERAL**	**1**
1.1	**Scope**	**1**
1.2	**Definitions**	**2**
2.	**PLANNING**	**4**
2.1	**Building Appraisal and Demolition Plan**	**4**
2.1.1	Building Survey	4
2.1.2	Structural Survey	6
2.1.3	Demolition Plan and Stability Report including Calculations	7
2.2	**Utilities**	**10**
2.2.1	Termination of Utilities	10
2.2.2	Effects of Demolition on Utilities	10
2.2.3	Common Utilities	10
2.2.4	Maintenance of Certain Utilities	11
2.3	**Hazardous Material**	**11**
2.3.1	Asbestos Containing Material	11
2.3.2	Soil Contamination Material	12
3.	**PRECAUTIONARY MEASURES**	**13**
3.1	**General**	**13**
3.2	**Hoarding and Covered Walkway**	**13**
3.2.1	Requirements for Hoarding, Covered Walkway and Catch Platform	13
3.2.2	Dimensions	15
3.2.3	Design Criteria	15
3.2.4	Proper Use of Covered walkway	18
3.2.5	Construction	18
3.2.6	Lighting	18
3.3	**Scaffoldings and Screen Covers**	**18**
3.3.1	Scaffoldings	18
3.3.2	Screen Covers	20
3.4	**Catchfan**	**21**
3.4.1	Requirements	21
3.4.2	Bamboo Catchfan	21
3.4.3	Steel Catchfan	22

3.5 Temporary Supports 24
3.5.1 General 24
3.5.2 Materials and Types 26
3.5.3 Loads 27
3.5.4 Structural Analysis and Design 28
3.5.5 Temporary Propping System 28
3.5.6 Erection and Dismantling 30

3.6 Protection of Properties 30
3.6.1 General 30
3.6.2 Party Walls and External Walls 30
3.6.3 Foundation Support 32

3.7 Protection of Traffic 32
3.7.1 Adjacent Traffic 32
3.7.2 Traffic Impact Assessment 32
3.7.3 Site Access 33

3.8 Special Safety Considerations 33
3.8.1 Training and Communication 33
3.8.2 Equipment Maintenance 34
3.8.3 Electrical Safety 34
3.8.4 Fire 34
3.8.5 Occupational Health 34
3.8.6 Emergency Exit Requirements in Demolition Sites 35
3.8.7 Vibration 35

3.9 Environmental Precautions 36
3.9.1 Air Pollution 36
3.9.2 Noise 36
3.9.3 Water 36
3.9.4 Hazardous Materials 36

3.10 Debris and Waste Handling 37
3.10.1 Chutes 37
3.10.2 Debris Recycling 38
3.10.3 Dust Minimization 39
3.10.4 Debris Accumulation 39
3.10.5 Debris Disposal and Management System 39
3.10.6 Debris Loading 40
3.10.7 Waste Management 40

3.11 Inspection and Maintenance 41

3.12 Post-Demolition Precautions 42

4. METHODS OF DEMOLITION 44

4.1 General 44

4.2 Top Down - Manual Method 44
4.2.1 General 44
4.2.2 Demolition Sequence 45
4.2.3 Cantilevered Structures and Balconies 45
4.2.4 Exterior Walls, Beams and Columns 48
4.2.5 Floor Slabs 57
4.2.6 Interior Beams 60
4.2.7 Interior Columns 60

4.3 Top Down – By Machines 60
4.3.1 General 60
4.3.2 Demolition Sequence 63
4.3.3 Cantilevered Canopies and Balconies 64
4.3.4 Exterior Walls, Beams and Columns 70
4.3.5 Floor Slabs 71
4.3.6 Interior Beams 71
4.3.7 Interior Columns 71

4.4 Mechanical Method by Hydraulic Crushers with Long Boom Arm 76
4.4.1 General 76
4.4.2 Application Criteria 76

4.5 Wrecking Ball 78
4.5.1 General 78
4.5.2 Application Criteria 80

4.6 Implosion 82
4.6.1 Pre-blast Considerations 82
4.6.2 General Concerns 82

4.7 Other Methods 84
4.7.1 Non Explosive Demolition Agent 84
4.7.2 Saw Cutting 84
4.7.3 Cutting and Lifting 85
4.7.4 Mechanical Demolition 87
4.7.5 Thermal Lance 91
4.7.6 Water Jet 92

5. SPECIAL STRUCTURES 93

5.1 Precast Concrete Structures 93
5.1.1 General 93
5.1.2 Simple Precast Construction 93
5.1.3 Continuous Precast Construction 95

5.2 Prestressed Concrete Structures 95
5.2.1 General 95
5.2.2 Classification of Prestressed Concrete Structures 95
5.2.3 Precautionary Site Measures 96
5.2.4 Demolition Procedures 97

5.3 Statically Determinate Structures 101
5.3.1 General 101
5.3.2 Cantilevered Structures 102
5.3.3 Hinged or Pin-Jointed Trusses 102

5.4 Composite Structures and Steel Structures 103
5.4.1 General 103
5.4.2 Demolition Method 103
5.4.3 Shoring of Slender Member 103

5.5 Cladding Walls 105
5.5.1 Demolition Method 105
5.5.2 Guidelines 105

5.6 Hanging Structures 106
5.6.1 General 106
5.6.2 Demolition Method 106
5.6.3 Guidelines 106

5.7 Oil Storage Facilities 106
5.7.1 General 106
5.7.2 Demolition Method 107
5.7.3 Guidelines 107

5.8 Marine Structures 108
5.8.1 General 108
5.8.2 Demolition Method 108
5.8.3 Guidelines 108

5.9 Underground Structures 109
5.9.1 General 109
5.9.2 Demolition Method 109
5.9.3 Guidelines 109

5.10 Structures Supporting Ground or Sitting on Slopes 110
5.10.1 General 110
5.10.2 Demolition Method 111
5.10.3 Guidelines 111

6. SITE SUPERVISION AND INSPECTION 113

6.1 General 113

6.2 Resident Supervision for Demolition of Complex Structures 113

Appendix	**A**	**DEMOLITION CHECKLIST**	**A1**
	B	**DEMOLITION PLAN CHECKLIST**	**B1**
	C	**PRESTRESSED CONCRETE AND GUIDELINES FOR IDENTIFICATION**	**C1**
	D	**REGULATIONS RELATING TO DEMOLITION PROJECTS**	**D1**
	E	**NOTIFICATIONS AND PROCEDURES**	**E1**
	F	**EXAMPLE OF DEMOLITION PLAN AND STABILITY REPORT FOR TOP DOWN MANUAL METHOD**	**F1**
	G	**EXAMPLE OF DEMOLITION PLAN AND STABILITY REPORT FOR TOP DOWN METHOD BY MACHINES**	**G1**
	H	**FLOW CHART FOR CURRENT DEMOLITION PROCEDURE**	**H1**

List of Tables

		Page
Table 3.1	**Width of Covered Walkway**	**15**
Table 3.2	**Design Criteria for Covered Walkway and Catch Platform**	**15**
Table 3.3	**Minimum specification for Polythylene Net**	**20**
Table 3.4	**Propping Requirements on the Operation of Mechanical Plant on Suspended Floor**	**29**
Table 4.1	**Summary of General Characteristics of Demolition Methods**	**46-47**
Table C-1	**Normal Span Depth Ratio of Reinforced Concrete Floor System, Exceeding which could be an Indication of the Existence of a Prestressed System**	**C3**

List of Figures

		Page
Figure 3.1	**Criteria for Hoarding & Covered Walkway**	**14**
Figure 3.2	**Typical Steel Catch Platforms and Covered Walkways**	**16-17**
Figure 3.3	**Typical Detail for Bamboo Catchfan and Screen Cover**	**23**
Figure 4.1	**Demolition of Cantilevered Reinforced Concrete Slab (Manual Method)**	**49**
Figure 4.2	**Demolition of Cantilevered Reinforced Concrete Slab and Beam(Manual Method)**	**50**
Figure 4.3	**Demolition of External Beam (Manual Method)**	**52**
Figure 4.4	**Details for Securing External Beams before Dismantling (Manual Method)**	**53**
Figure 4.5	**Pre-weakening and Dismantling of Column (Manual Method)**	**54**
Figure 4.6	**Felling of Reinforced Concrete Wall (Manual Method)**	**56**
Figure 4.7	**Felling of Reinforced Concrete Wall Separately from the Cross Beam (Manual Method)**	**58**
Figure 4.8	**Demolition of Two Way Slab (Manual Method)**	**59**
Figure 4.9	**Demolition of Secondary Beam (Manual Method)**	**61**
Figure 4.10	**Details for Securing Secondary Beams Before Dismantling (Manual Method)**	**62**
Figure 4.11	**Typical Sequence of Top Down Method with Mechanical Equipment**	**65-67**
Figure 4.12	**Demolition of Cantilevered Slab by Mobile Machine**	**68-69**
Figure 4.13	**Demolition of Reinforced Concrete Frame by Excavator With Cable**	**72**
Figure 4.14	**Demolition of Reinforced Concrete Wall by Excavator**	**73-75**
Figure 4.15	**Demolition by Hydraulic Crusher with Long Arm Boom**	**77**

List of Figures (Cont'd)

Figure 4.16	**Operation of Wrecking Ball**	**79**
Figure 4.17	**Application of Wire Saw Techniques**	**86**
Figure 4.18	**Mechanical Methods**	**88**
Figure 5.1	**Lifting of Precast Structural Element**	**94**
Figure 5.2	**Protection for Detensioning of Prestressed Concrete Tendons**	**98**
Figure 5.3	**Common Problems Occur in Cantilevered Structures**	**104**
Figure F.1	**Site Plan and Adjoining Site Conditions**	**F3**
Figure F.2	**Typical Floor Plan and Existing Building Information**	**F5**
Figure F.3	**Elevation A**	**F7**
Figure F.4	**Demolition Procedure and Sequence**	**F8**
Figure F.5	**Precautionary Measures**	**F12**
Figure F.6	**Typical Support at Cantilever**	**F16**
Figure F.7	**Typical detail for Party Wall Strengthening**	**F17**
Figure G.1	**Site Plan and adjoining Site Conditions**	**G2**
Figure G.2	**Typical Floor Plan and Existing Building Information**	**G4**
Figure G.3	**Elevation A**	**G6**
Figure G.4	**Demolition Procedure and Sequence**	**G7**
Figure G.5	**Precautionary Measures**	**G12**
Figure H.1	**Flow Chart for Current Demolition Procedure**	**H1**

1. GENERAL

1.1 Scope

This Code of Practice outlines good practices for the planning and implementation of demolition works for different types of buildings in Hong Kong aiming at minimising the risks of :

(A) causing damage to persons and properties of the public;

(B) endangering the health and safety of site personnel; and

(C) damaging the neighbourhood environment.

The Code is intended to give guidelines for engineering practice and safe procedures for various demolition methods and to provide guidance on the compliance with relevant requirements of the Buildings Ordinance and its subsidiary regulations. Aspects related to environmental, occupational safety and health should be referenced to other relevant ordinances and regulations.

This Code sets out the guidelines for demolition of buildings and is applicable to individual structures, partial demolition of buildings, basements, underground tanks, and common civil engineering structures, e.g., silos, industrial plants, piers, etc. However, this Code is not intended to cover unauthorized building works and major civil engineering works, such as underpinning, excavation, highway or railway bridges and dams. As for removal of unauthorized building works, reference should be made to the 'Guidelines for the Removal of Typical Unauthorized Building Works and General Maintenance of External Walls' issued by the Buildings Department.

This Code covers methods commonly used in building demolition. Any other demolition methods may also be used subject to careful consideration and recommendations made by the Authorized Person, Registered Structural Engineer and Registered Specialist Contractor in the Demolition Category (hereinafter referred to "Registered Specialist Contractor (Demolition)"), or their consultants based on well supported scientific research and engineering assessment.

1.2 Definitions

For the purpose of this Code, the following definitions shall apply:

"Authorized Person" means a person whose name is on the Authorized Persons' register kept by the Building Authority under section 3(1) of the Buildings Ordinance :

(a) as an architect; or
(b) as an engineer; or
(c) as a surveyor;

"Blasting Expert" means a person who is the holder of a valid mine blasting certificate or a special authorization issued by the Commissioner of Mines pursuant to Dangerous Goods (General) Regulations 47.

"Building Height" means the vertical distance measured from the top most part of the building to be demolished to the lowest ground level;

"Building Survey" means an inspection on the building and its surroundings aiming at spotting any potential problems that may arise during demolition and developing a method statement for demolition;

"Catch Platform" is a temporary structure erected on top of the covered walkway or underneath the structures that are being demolished including, but not limited to, balconies and cantilevered structures for the purpose of catching and retaining debris and to protect the area beneath such structures being demolished;

"Catchfan" is a temporary structure erected around and attached to or abutting the exterior wall of the building being demolished for the purpose of catching and retaining debris that fall outside the building;

"Covered Walkway" means a temporary structure with protective roof erected along the site boundary and on or adjacent to the existing footpath to protect pedestrians from the falling debris during demolition;

"Demolition" means dismantling, razing, destroying or wrecking any building or structure or any part thereof by pre-planned and controlled methods;

"Demolition Plan" is a plan prescribed by Building (Administration) Regulation 8(3) in respect of demolition works.

"Hanging Structure" is an unconventional structure that is supported from above by tension members such as suspended cables, tie rods or other means;

"Hanging Tie" means the tension members providing supports to a hanging structure.

"Hoarding" means a temporary fence enclosure erected along the site boundary to separate the demolition site from the adjacent properties;

"Implosion" means demolition with the use of explosives, in which, the building debris falls inwards or in a controlled manner;

"Implosion Expert" means a person who has acquired adequate knowledge and experience in building implosion through training and practical experience and is competent in taking up the full responsibility to design, organise and control building implosion, subject to approval by the Building Authority and the Commissioner of Mines.

"Non-Ventilated Light Well" means a light well which does not provide either natural ventilation through openings at both top and bottom, or mechanical ventilation that allow circulation of air;

"Party Wall" means a common wall that separates two adjoining buildings;

"Public Filling Area" means dumping site operated by the Government of the Hong Kong Special Administrative Region for receiving suitable construction and/or demolition waste for reclamation and land formation projects;

"Registered Specialist Contractor in the Demolition Category" means a person whose name is for the time being on the sub-register for the demolition category in the register of specialist contractors maintained under section 8A of the Buildings Ordinance;

"**Registered Structural Engineer"** means a person whose name is for the time being on the structural engineers' register kept under section 3(3) of the Buildings Ordinance;

"Standards of Scaffold" means vertical members of scaffolding;

"Stability Report accompanying Demolition Plan" is a stability report which includes stability checking calculations for the building to be demolished, its supports, if any, the adjoining properties and the loading due to powered mechanical plants, or equipment, and its contents are stated in Building (Administration) Regulation 8(4).

"Structural Survey" means a survey on the existing structural element prior to demolition in order to check the layout arrangement of structural elements, the state of maintenance and deterioration, and any structural implication that may affect the demolition;

"Thermal Lance" means an intense heat process used to cut or sever structural elements, including reinforced concrete elements, by means of a high temperature torch with heat source generated from fusion of oxygen and metal.

2. PLANNING

2.1 Building Appraisal and Demolition Plan

Prior to carrying out any building demolition, detailed building appraisal by means of surveys and appropriate assessments shall be required. In general, the surveys shall include a Building Survey and a Structural Survey with photographs or videos taken for future reference. Based on the findings of these surveys, a demolition plan shall then be prepared and submitted to the Buildings Department for approval. The demolition plan must also be accompanied by a report together with structural calculations assessing the stability of the building to be demolished and all affected buildings, structures, streets, land and services.

2.1.1 Building Survey

(A) Record Drawings

Prior to the Building Survey, the existing record plan, including layout plan showing adjoining properties, pedestrian walkway, roads and street, etc. shall be retrieved.

(B) Survey Items

The Building Survey shall cover the following:

(1) The construction materials;

(2) The existing use and, if possible, the past uses of the building prior to demolition;

(3) The presence of wastewater, hazardous materials, matters arising from toxic chemicals, flammable or explosive and radioactive materials, etc. and possible presence of materials which can contribute to air pollution and soil contamination;

(4) Potential dangerous areas, e.g., abnormal layouts, presence of enclosed voids, and non-ventilated light wells which may trap obnoxious gas at the bottom;

(5) Adjoining properties and site conditions, such as the existence of slope and retaining wall, wall supporting ground, illegal structures, bridges, underground railway and its above ground structures, including entrances, vent shafts, distribution substations, traction substations, plantrooms, overhead railway structures, surface track sections, overhead cables or guy wires, and other utility service connections;

(6) Drainage conditions and possible problems on water pollution, flooding and erosion, especially on sloping sites and water receiving bodies;

(7) Shared facilities with adjoining building, including common staircases, party walls, and possible effect on it, such as self-enclosed walls to the adjoining buildings, during demolition;

(8) Hoarding and covered walkway requirements;

(9) Adjoining pedestrian and vehicular traffic conditions;

(10) Available headroom, clear spaces and distance of building from lot boundary which may affect the loading operation and transportation of building debris during demolition;

(11) The sensitivity of neighbourhood with respect to noise, dust, vibration and traffic impact. For building/structures to be demolished, confirming whether it is within the scope of the designated projects specified in schedule 2 of the Environmental Impact Assessment Ordinance;

(12) Available site area to allow on-site sorting of building debris; and

(13) Street furniture such as fire hydrant, parking space/metres, street light, street sign and hawkers' stalls which could be affected by the demolition project.

(C) Hazardous Materials

(1) Unless the Building Survey reviews that no obvious hazardous material is present in the building, the Authorized Person shall cause proper sampling and testing for the hazardous materials;

(2) In the case when hazardous materials e.g., asbestos containing materials, or petroleum, are present, they shall be removed and cleaned/disposed of according to the statutory requirements administered by the Environmental Protection Department, Fire Services Department, Labour Department and any other Government Departments, referred to in Appendix D;

(3) In the case when the site has previously been used to store chemicals, and other dangerous goods, soil contamination assessment shall be required at pre-demolition stage and/or post-demolition stage; and

(4) In the case when the site has previously been used to store explosives, special procedures to ensure no explosives remain on site will be required.

2.1.2 Structural Survey

(A) Record Drawings

Prior to the Structural Survey, the existing record layout, structural framing plans and structural details shall be studied. The Registered Structural Engineer shall check the presence of unusual detailing that may cause abnormal structural behaviour during demolition, e.g., upward anchor of tensile reinforcement in cantilevered structures. If existing record plans are available, these plans shall be used as reference and preferably be brought along with the Structural Survey.

(B) Survey Items

The Structural Survey shall cover the following:

(1) The structural materials used;

(2) The original structural system employed in the design;

(3) The method of construction;

(4) Any dilapidation and degree of deterioration on any structural elements;

(5) The structural conditions of adjoining structures and its shoring which may be affected by the proposed demolition work;

(6) The presence of continuous structures that may be truncated by the demolition;

(7) The structural system and structural conditions of basements, underground tanks or underground vaults;

(8) The presence of exposed bracing or possible presence of covered bracing;

(9) The nature of walls, whether it is blockwall, reinforced concrete walls, load bearing walls or partition walls;

(10) Cantilevered structures such as canopies, balconies, or other forms of architectural features; and

(11) Any fixtures to the building such as signboard, sun-shading devices.

(C) Special Structures

The Structural Survey shall review the following :

(1) the correctness of structural information available;

(2) the presence of any unconventional structural elements referred to in 2.1.3(A)(3) which may require special attention and well-defined modification procedures;

(3) the possibilities of structural modification to enable efficient demolition traffic during demolition; and

(4) any limitation on shoring and other temporary supports.

(D) Investigation and Testing

In the case when no structural details are available, the Structural Survey shall include on site measurement and retrieve any structural framing as much as practicable, performing tests and exposing some key structural elements to facilitate checking on existing structure. This will allow the development of procedures that ensure the stability of the building at all stages during demolition.

2.1.3 Demolition Plan and Stability Report including Calculations

(A) Demolition Plan

A Demolition Plan shall include the following :

(1) A plan showing :

(a) the location of the building to be demolished;

(b) a detailed topography of the site and its surrounds together with ground level contours and sections of the slopes and ground supported by the building where appropriate;

(c) details of ground removal and/or backfilling; and

(d) the distances from the building to be demolished to its adjacent buildings, streets, structures and significant street furniture.

(2) A layout plan of all floors of the building to be demolished, with adequate sections, showing :

(a) the occupancy usage of the floors;

(b) the structural support systems;

(c) principal materials of construction;

(d) the condition of the building e.g. the degree of deterioration; and

(e) the relationship of the building to be demolished with neighbouring properties affected by the demolition, which include all adjoining buildings and unauthorized structures, shared staircases, party walls, truncating continuous frames, slopes, retaining wall, overhead cables, guy wires and underground utility services.

(3) A plan showing the structural arrangement and construction of all unconventional structural elements, such as prestressed concrete structures, precast concrete members, stressed skin structures, steel framed structures, hangers, hanging ties, trusses or Vierendeel girders, deep beams, long span beams (greater than 10m), arches, transfer plates, transfer girders, earth retaining or basement structures, buildings which also act as earth-retaining structures supporting adjacent ground, flat slabs, hollow block ribbed slabs and large cantilevered structures;

(4) A plan showing the procedure for the demolition of the building; detailed sequence of demolishing particular structural members; and the method of demolition to be adopted including the restrictions on the use of any particular type of equipment;

(5) In the case when powered mechanical plants and equipment are used, a plan showing the route of movement of powered mechanical plants and equipment including the method of lifting mechanical plant, where necessary, onto the top floors of the structure; any structural alterations required to suit the demolition, e.g. temporary strengthening to suit early removal of any ground floor/or cockloft structure to facilitate vehicular movement at ground floor, or strengthening of deteriorated key structural members; and any shoring, temporary supports and/or floor propping required;

(6) A plan showing all precautionary measures for the protection of the public including hoardings, covered walkways, catch platforms, catchfans, scaffolding, protective screens and safety nets;

(7) A plan showing the proposed shoring and precautionary measures for all affected adjacent buildings, slopes, retaining structures and services at each stage of the demolition works;

(8) A plan showing the proposed shoring and temporary support to be provided to the building to be demolished;

(9) A plan or descriptive notes on the proposed methods for handling and disposal of debris including :

(a) the permissible temporary accumulation of building debris at upper floors and at ground floor;

(b) method of handling demolished building debris;

(c) the routing and movement of debris from each floor to on grade holding area prior to leaving the site;

(d) means of transportation of debris off the site;

(e) time and frequency of debris disposal off site;

(f) record scheme on the tonnage of each truck load, truck licence plate, driver's name, trip tickets and location of dump site;

(g) the site supervisory personnel responsible for the debris management system; and

(h) a temporary parking layout for mobile machines and trucks, if necessary;

(B) Stability Report including Calculations

According to Building (Administration) Regulation 8(4), the Demolition Plan must be accompanied by a Stability Report with supporting calculations. The Stability Report shall include the following parts :

(1) a report on the stability of the building to be demolished during all stages of demolition;

(2) in the case when powered mechanical plants or equipment are used, a report on the stability of the building with supporting calculations to demonstrate that the use of the plants and equipment will not render inadequate the margin

of safety of, or cause damage to any building, structure, street, land and services;

(3) in the case when powered mechanical plants or equipment are used, structural calculations for all temporary supports and bracings;

(4) a report on the stability of neighbouring buildings, adjoining properties as stated in 2.1.1.(B)(5), party walls, streets, land and services which may be affected by the demolition work;

(5) in the case when temporary or permanent supports are required to these neighbouring buildings, adjoining properties, and party walls, structural calculations for these temporary and permanent supports; and

(6) a report with calculations demonstrating that the demolition work will not render inadequate the margin of safety of, or cause damage to any building, structure, street, land and services.

A checklist for preparing a Demolition Plan and Stability Report with Calculations is depicted in Appendix B.

2.2 Utilities

2.2.1 Termination of Utilities

Prior to actual demolition, the Authorized Person shall liaise with all available utility companies so as:

(A) to keep records of available utilities leading into the premises; and

(B) to cause all utilities to be terminated.

2.2.2 Effects of Demolition on Utilities

The demolition plan shall ensure that during the course of demolition, no existing utilities in the vicinity of the demolition sites are affected by the demolition operation.

2.2.3 Common Utilities

The common utilities encountered in building demolition generally include the following:

(A) Electricity;

(B) Water;

(C) Gas;

(D) Telecommunication;

(E) Drainage;

(F) Overhead and Underground Cables;

(G) Railway Tunnel and its accessories, such as vent shafts;

(H) Sewage Tunnel and its accessories; and

(I) Disused Tunnel.

All utility companies and relevant agencies shall be consulted prior to demolition of the structure.

2.2.4 Maintenance of Certain Utilities

(A) During demolition, the following basic utilities shall be required to provide a safe and healthy working environment:

(1) Temporary water supply shall be required to provide water spraying during demolition as dust pollution abatement measures;

(2) Temporary telecommunication link between the demolition site and outside organisation shall be maintained for both security and communication reasons; and

(3) Temporary electricity supply for lighting and other construction use.

(B) In the case when temporary utilities are available, all such temporary utilities, including electrical fittings shall be weather-proofed.

2.3 Hazardous Material

If hazardous materials, such as asbestos containing materials, petroleum contamination and radioactive contamination, exist in the building, further investigation and removal of such hazardous material or contamination by specialist shall be referenced.

2.3.1 Asbestos Containing Material

Specialists shall be employed to take samples and cause such samples to be tested for asbestos containing material. In the case when asbestos containing material are discovered, specialist contractor shall be employed to remove such asbestos containing material. The asbestos

waste should be handled, stored and disposed of as chemical waste in accordance with the Waste Disposal Ordinance and Waste Disposal (Chemical Waste) (General) Regulation.

2.3.2 Soil Contamination Material

In the case when possible soil contamination material is present, specialist shall be employed to prepare soil contamination test proposal and submit such proposal to the Environmental Protection Department for comment. Upon agreement by the Environmental Protection Department, and completion of the tests, a Soil Contamination Assessment shall be submitted to the Environmental Protection Department for acceptance. In the case when remedial works are required, the remedial proposal shall be submitted to the Environmental Protection Department for approval prior to implementation of such remedial works.

3. PRECAUTIONARY MEASURES

3.1 General

Site safety features shall emphasise protection of the public, particularly, the pedestrian and vehicular traffic and the adjacent properties. Proper safety features shall be designed by the Authorized Person / Registered Structural Engineer to make sure that the demolition can be carried out safely and the site personnel is protected. The Registered Specialist Contractor (Demolition) shall carry out the demolition works including precautionary measures in accordance with the approved plans and other related documents, and provide continuous supervision to the works.

3.2 Hoarding and Covered Walkway

The primary purpose of hoarding and covered walkway is to provide protection of the public during the construction or demolition of buildings. Generally, hoarding isolates the demolition site from the public, thus preventing unauthorized access and trespassing. The covered walkway, in conjunction with catch platform, provides additional protection to the pedestrian traffic against falling debris. The Authorized Person / Registered Structural Engineer shall design them to suit individual site circumstances. Suggested designs for hoarding, covered walkway and catch platform are listed in the following:

3.2.1 Requirements for Hoarding, Covered Walkway and Catch Platform

The criteria for use of covered walkway for a site depend on the height of the building being demolished and its proximity to the vehicular and/or pedestrian traffic. The requirements for hoarding, covered walkway and catch platform are described in the following:

(A) For buildings that have a clear space between the building line and the lot boundary equal to or more than the building height (hereinafter referred to as clear space), only hoarding shall be required;

(B) Covered walkway shall be provided for building with clear space less than the building height;

(C) Covered walkway with catch platform shall be provided for buildings with clear space less than half the building height. No catch platform is required for building less than 4 m high;

(D) The hoarding and/or covered walkway shall be provided along the full length of the site boundary adjacent to public access.

(E) The requirements for hoarding, covered walkway and catch platform are illustrated in Figure 3.1.

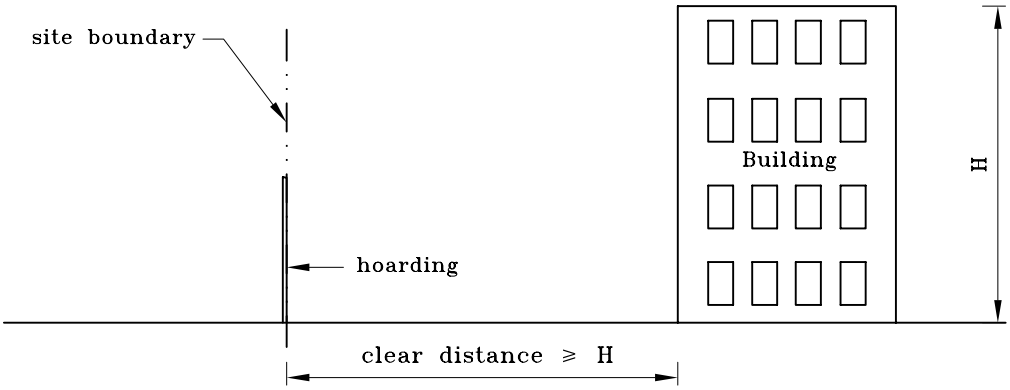

CASE 1. Only hoarding is required, if clear distance ≥ H

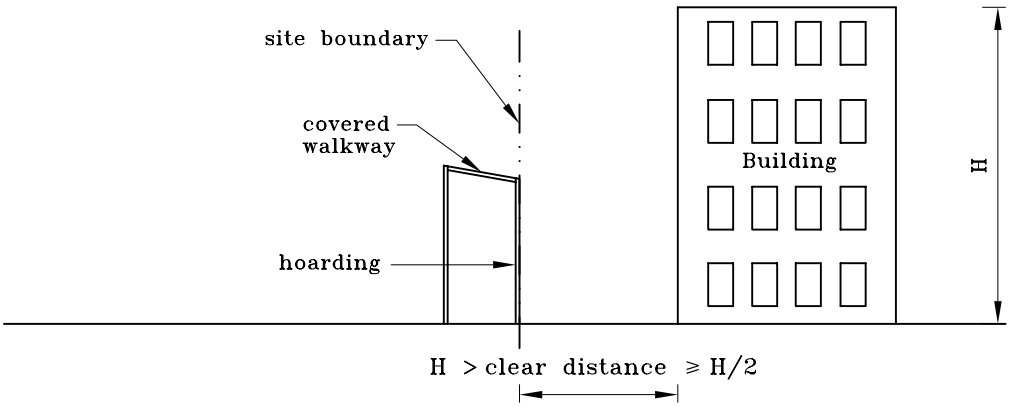

CASE 2. Hoarding and covered walkway are required if
H > clear distance ≥ H/2

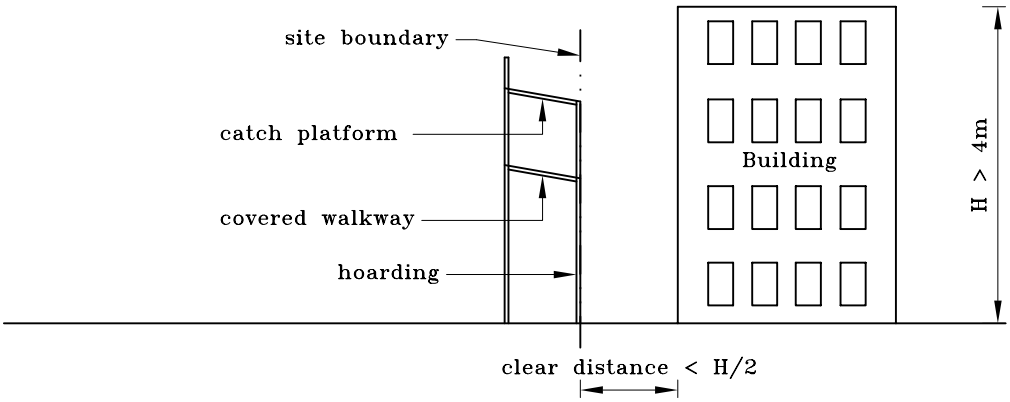

CASE 3. Hoarding, covered walkway and catch platform are required if clear distance < H/2.
Catch platform is not required for building less than 4m high.

FIGURE 3.1 CRITERIA FOR HOARDING & COVERED WALKWAY

3.2.2 Dimensions

A minimum vertical clearance of 2.3 m shall be provided for the covered walkway. A minimum clear width of 1.1m is required for hoarding/covered walkways sited on a carriageway. As regards hoarding/covered walkways on a footpath, the clear width should be related to the existing pavement as set out in Table 3.1. The required clear width must not be obstructed in any manner e.g. by traffic sign, temporary supports, scaffoldings or the like. The width of the catch platform shall not be less than 2 m when it abuts a street and may be reduced by the amount of set back of the building. Separation distance between the walkway cover and the catch platform shall be individually determined according to the design need, e.g. maintenance. A minimum clearance of 5.5 m shall be maintained for the catch platform within a minimum distance of 500mm from edge of a carriageway unless otherwise agreed by the Highways Department. 5.5m clear headroom over gantry shall be maintained as far as practicable.

Table 3.1 Width of Covered Walkway

Existing Pavement Width	Minimum Clear Width in Walkway
2.5 m or less	Normally 1.5m minimum. Exemption may be considered if the pavement is of insufficient width
over 2.5 m to 3 m	Width of the pavement minus 0.8m subject to a maximum of 2 m
Over 3 m	2 m

3.2.3 Design Criteria

The roof of the covered walkway shall be designed to support a uniformly distributed load of 5 kPa. The catch platform shall be designed to sustain a uniformly distributed load of 5 kPa or a point load of 20 kN acting on an effective area of 300 mm × 300 mm, whichever shall produce the most adverse effect. Design criteria for covered walkway and catch platform are summarised in Table 3.2. The hoarding, covered walkway and catch platform shall be designed to sustain the wind load according to the current Code of Practice on Wind Effects in Hong Kong or its latest equivalent publication. The location of the proposed covered walkway shall be compatible to the existing traffic environment.

Typical details for the catch platform and covered walkway are illustrated in Figure 3.2

Table 3.2 Design Criteria for Covered Walkway and Catch Platform

	Uniform Distributed Load	Point Load
Covered Walkway	5 kPa	-
Catch Platform	5 kPa	20 kN acting on an effective area of 300 mm × 300 mm.

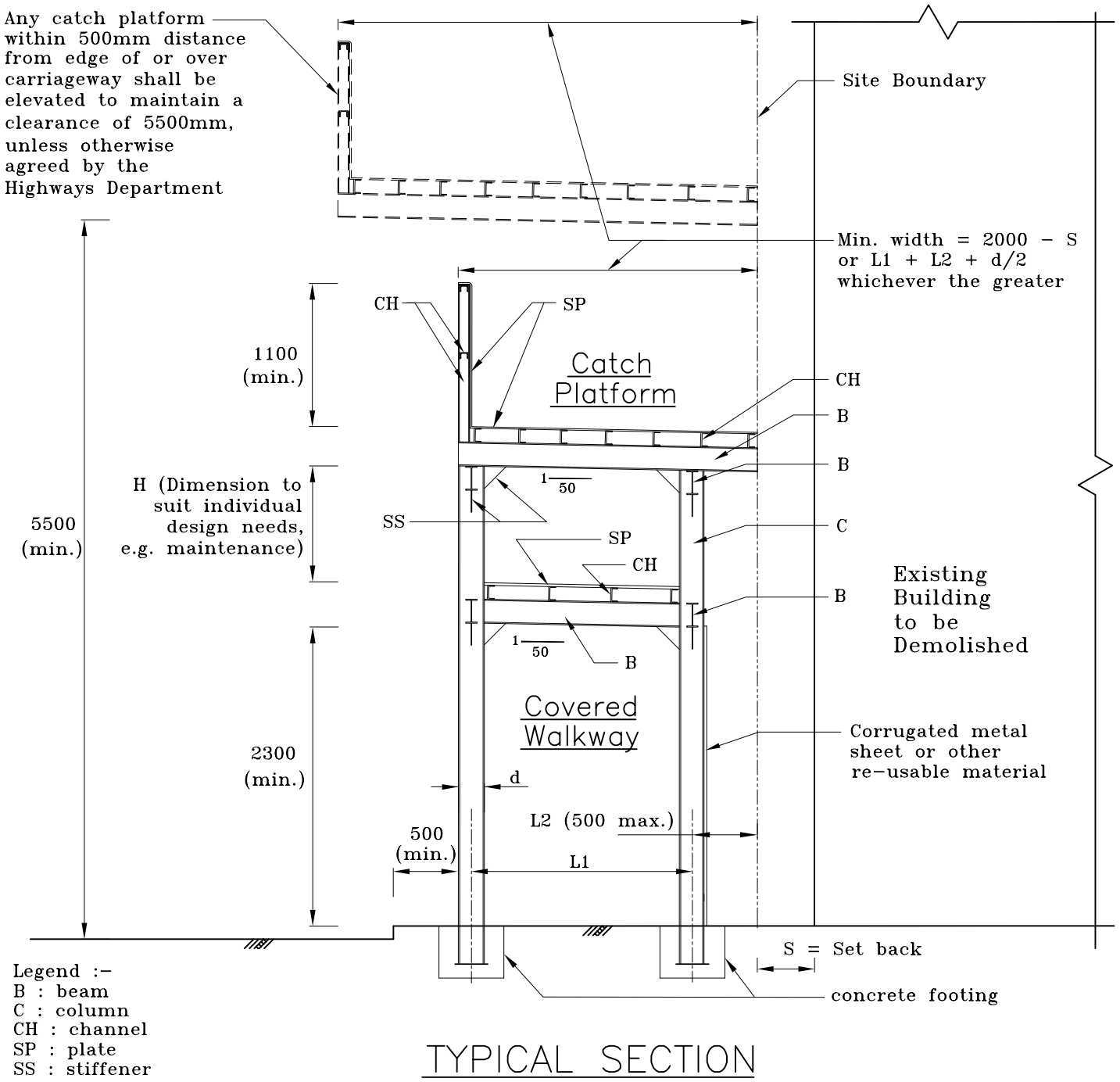

TYPICAL SECTION

NOTES :

(1) Design reference shall also be made to other documents and guidelines in Appendix D of this Code of Practice.

(2) AP/RSE shall provide precise details to suit specific circumstances of individual site.

(3) Total width of footings at any cross section should not be more than half the width of the footpath in order not to impede access to underground public services.

(4) The footings shall not rest on or enclose any underground utilities. In any case, the utility undertakings should be consulted regarding locations of underground utilities.

FIGURE 3.2 TYPICAL STEEL CATCH PLATFORMS AND COVERED WALKWAYS (SHEET 1 OF 2)

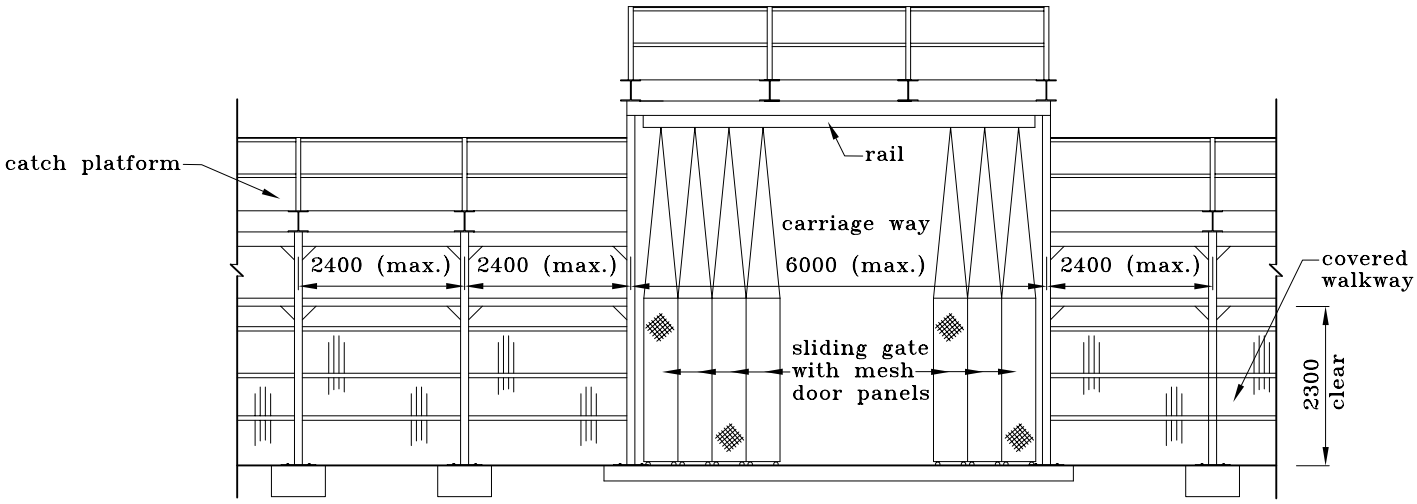

TYPICAL ELEVATION

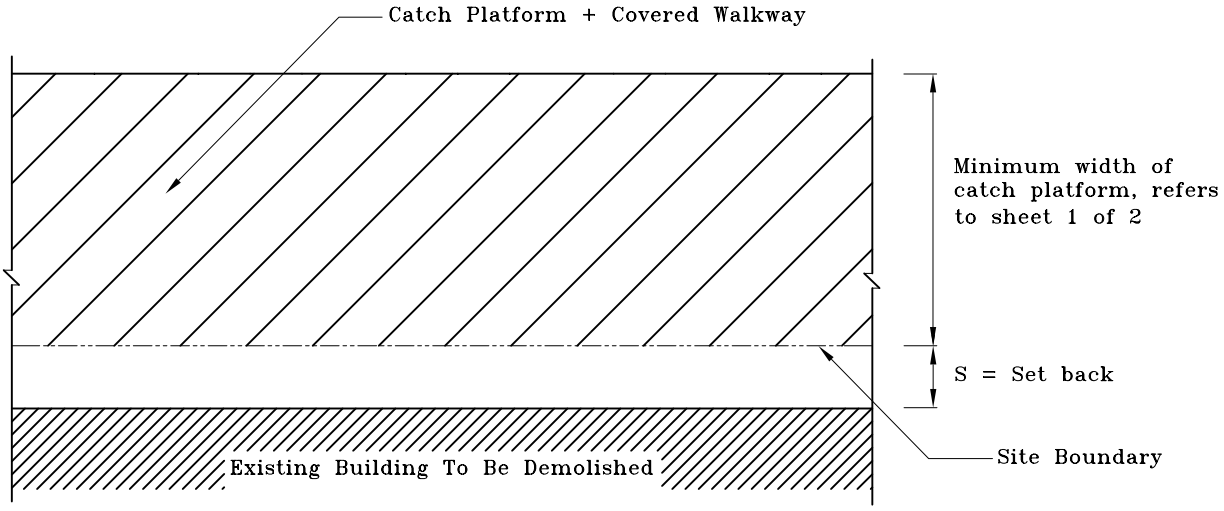

PLAN AT CATCH PLATFORM LEVEL

FIGURE 3.2 TYPICAL STEEL CATCH PLATFORMS AND COVERED WALKWAYS (SHEET 2 OF 2)

3.2.4 Proper Use of Covered Walkway

Debris shall not be accumulated on the roof of the covered walkway. It shall not be used for any other purposes such as storage of building materials and equipment inside or above the covered walkway.

If it is intended to build a temporary contractor's shed over the covered walkway, it must be structurally independent of the covered walkway. The roof of the contractor's shed shall sustain the design load criteria for the catch platform or covered walkway whichever is applicable.

The roof of the covered walkway shall be pitched inwards to better contain the debris and for roof drainage. Upstand edge board of 1.1 m or higher measured from the toe of roof line of the catch platform's outer edge shall be provided to retain the fallen debris.

3.2.5 Construction

As far as practicable, the structural components of the covered walkway and catch platform shall be prefabricated and fastened together on site by bolts so that they can be reused. Site welding shall be minimised in order to reduce the erecting time and potential hazard to pedestrians or vehicular traffic. Prefabricated shoring systems, glass fibre reinforced panels and other ready to use systems shall be used for the hoarding, cover walkway or catch platform installation as much as possible.

3.2.6 Lighting

A system of temporary lighting shall be provided for the covered walkway and shall be maintained in good order. The average illuminance on the floor level of the covered walkway shall be within the range of 35 lux to 50 lux. The lighting shall be weather-proofed. A recommended lighting layout for typical covered walkway is the installation of luminaries complete with 18 W or 20 W 600 mm long tubular florescent lamps at 3 m spacing.

3.3 Scaffoldings and Screen Covers

3.3.1 Scaffoldings

Bamboo scaffolds or metal scaffolds shall be used for top down demolition projects. Both bamboo scaffolds and metal scaffolds are considered acceptable provided that they are erected according to the Construction Sites (Safety) Regulations and the codes of practices on scaffolding safety.

(A) Scaffolding Construction and Work Platform Requirements

The erection, dismantling and safety requirements of the work platforms and scaffold shall be in accordance with the Construction Sites (Safety) Regulations and the relevant codes of practice on scaffolding safety issued by the Labour Department. The works shall be carried out by trained workmen under the immediate supervision of a competent person.

Supports for the scaffolds should be of adequate strength to hold the vertical and lateral loads imposed on the scaffolds including the catchfans, work platforms, etc. In case when elevated supports are required to receive the weights of the scaffolds, be they the steel brackets and anchors fixed to the existing building or other kinds of supporting system, they shall be designed by a Registered Structural Engineer. Where working platforms are required to facilitate working at height, they shall be properly constructed and provided on the three consecutive lifts directly below the floor being demolished with toe boards provided at the outer edge. Periodic maintenance shall be performed to remove any debris accidentally falling out of the building and accumulated on the platforms.

(B) Bamboo Scaffold

The requirements of the Code of Practice for Bamboo Scaffolding Safety have to be complied with.

In addition, structural ties to the building structure shall be provided in accordance with manufacturer's recommendations. Bamboo scaffold shall be tied to sound anchors at intervals of not more than 4m in both horizontal and vertical directions.

If the scaffold is higher than 15m, steel brackets anchored to the existing building structure or other support system shall be provided at interval of not more than 15m to support the scaffold.

(C) Metal Scaffold

The requirements of the Code of Practice for Metal Scaffolding Safety and the recommendations from manufacturer shall be followed.

Furthermore, as a minimum, the scaffold shall be able to support the live load imposed on three consecutive layers of work platform plus its own weight. Additional loading conditions, if any, shall be included in determining the allowable height for the scaffoldings. Tie to existing structure shall be in accordance with manufacturer's recommendations.

(D) Dismantling

Dismantling of the scaffolds shall coincide with the demolition progress. When the wall ties are disconnected due to the demolition of the building structure, the unsecured section of the scaffolds shall be removed accordingly. The unbraced sections shall not be higher than 2m from the nearest anchor.

3.3.2 Screen Covers

(A) Requirements

Two layers of protective screen shall be placed over the scaffolds to completely enclose the building structure for retaining dust and small debris. Tarpaulin and heavy duty nets shall be used to cover the exterior face of the scaffold. Tarpaulin shall be placed over the net. The screen system shall satisfy the requirements under the Air Pollution Control (Construction Dust) Regulation administered by the Environmental Protection Department, where applicable.

(B) Ties

The protective screens shall be secured to the scaffoldings at not more than 2 m intervals at both horizontal and vertical directions or the width of the net, whichever is less. The screens shall have a minimum overlapping width of 300 mm.

(C) Nets

(1) Materials and Installation

Heavy duty nets shall be relatively light weight and have good retaining capability for small debris. The material shall resist ultra-violet light deterioration. The nets shall be secured to the scaffold and at the catchfan so that debris can be retained and not deflected onto the ground.

The net shall meet the minimum requirements as listed in Table 3.3 or approved equivalent.

Table 3.3 Minimum Specification for Polyethylene Net

Criteria	Minimum Requirement
material	polyethylene
string diameter	1 mm
plys	16
mesh grid opening	20 mm
weight	130 g/m^2

(D) Tarpaulin

Tarpaulin shall be light weight and constructed of fire retardant materials.

The fire retardant characteristic of the tarpaulin shall meet either one of the following requirements:

(1) Class B material as specified in British Standard 5867;

(2) Flame retardant test for certain items, light weight cloths methods, provided by the Fire Retardant Regulations for Protective Canvas for Construction, Japan Ministerial Ordinance of the Ministry of Home Affair; or

(3) Any equivalent standard criteria or testing.

3.4 Catchfan

3.4.1 Requirements

The design intention of the catchfans is to catch small pieces of building debris that passes through the protective screen and net, and the catchfans are not designed to collect large pieces of building debris which should have been collected by the protective screen or net. A small piece of debris could be disastrous after gaining enough kinetic energy through falling great heights. Thus, a catchfan shall be installed at a vertical distance of not more than 10 m below the working floor. A catchfan shall have a horizontal extension of 1.5 m from the exterior face of the scaffolding. The typical angle of inclination shall be 20° to 45° from the horizontal plane. Catchfans shall be used only as precautionary measures and shall not be used as temporary support for any anticipated loads.

Both bamboo catchfans and metal catchfans are acceptable provided that they are properly installed. Under the present craftsman's techniques, bamboo catchfans can be applied to either bamboo scaffolds or metal scaffolds, but metal catchfans are allowed to be mounted on metal scaffolds only.

3.4.2 Bamboo Catchfan

Typical Detail of Bamboo Catchfan is illustrated in Figure 3.3.

(A) Framing

A bamboo catchfan shall be constructed with bamboo framing tied to the building and the scaffold. The supporting bamboo member shall be tied to the standards of both the outer and inner scaffolding layers at the desirable inclined angle extended into the building. The catchfan supports shall be anchored to the

building wall or other structural elements. The spacing between the supporting bamboo members shall be not less than the distance between the standards of the scaffold or not more than 1.3 m whichever is less. The supporting bamboo framing shall be anchored to the building wall or other structural elements with anchor bolts and steel wire ties of adequate strength. The spacing between the anchor shall be not more than 3 m. The supporting bamboo shall have an effective diameter of not less than 40 mm.

(B) Decking

The Bamboo members which are tied to the supporting members to form the deck of the fan shall have diameter of not less than 40 mm. Bamboo shall be placed across the supporting members at not more than 200 mm centres. Tarpaulin, net and metal sheet or corrugated metal sheet shall be placed on the top of the fan to retain debris. The thickness of the metal sheet shall be 0.5 mm. The tarpaulin, net, and metal sheets shall be securely fastened to the bamboo.

3.4.3 Steel Catchfan

The steel catchfans are considered as temporary cantilevered structures with steel framing extended from the building. The use of expansive anchor bolts in erecting the catchfan shall be avoided as far as practicable since the anchor bolt may be loosened by vibration generated during the demolition process. In the case when anchors are used, they shall be applied cautiously with extreme care; and not as a primary support. Extreme care shall be exercised in erecting and dismantling the catchfan to avoid the structural components from accidentally falling off. All the components of the steel catchfan shall be supported, and securely fastened to the lifting appliances or supporting structural element until the installation is completed. Catchfan may be constructed with components of prefabricated steel/metal scaffold. Such use is particularly compatible with metal scaffolds. The design and installation of catchfan using prefabricated metal scaffold components shall be in accordance with the manufacturer's recommended criteria. As far as practicable, the components of the catchfan shall be prefabricated and fastened by bolt to minimise welding.

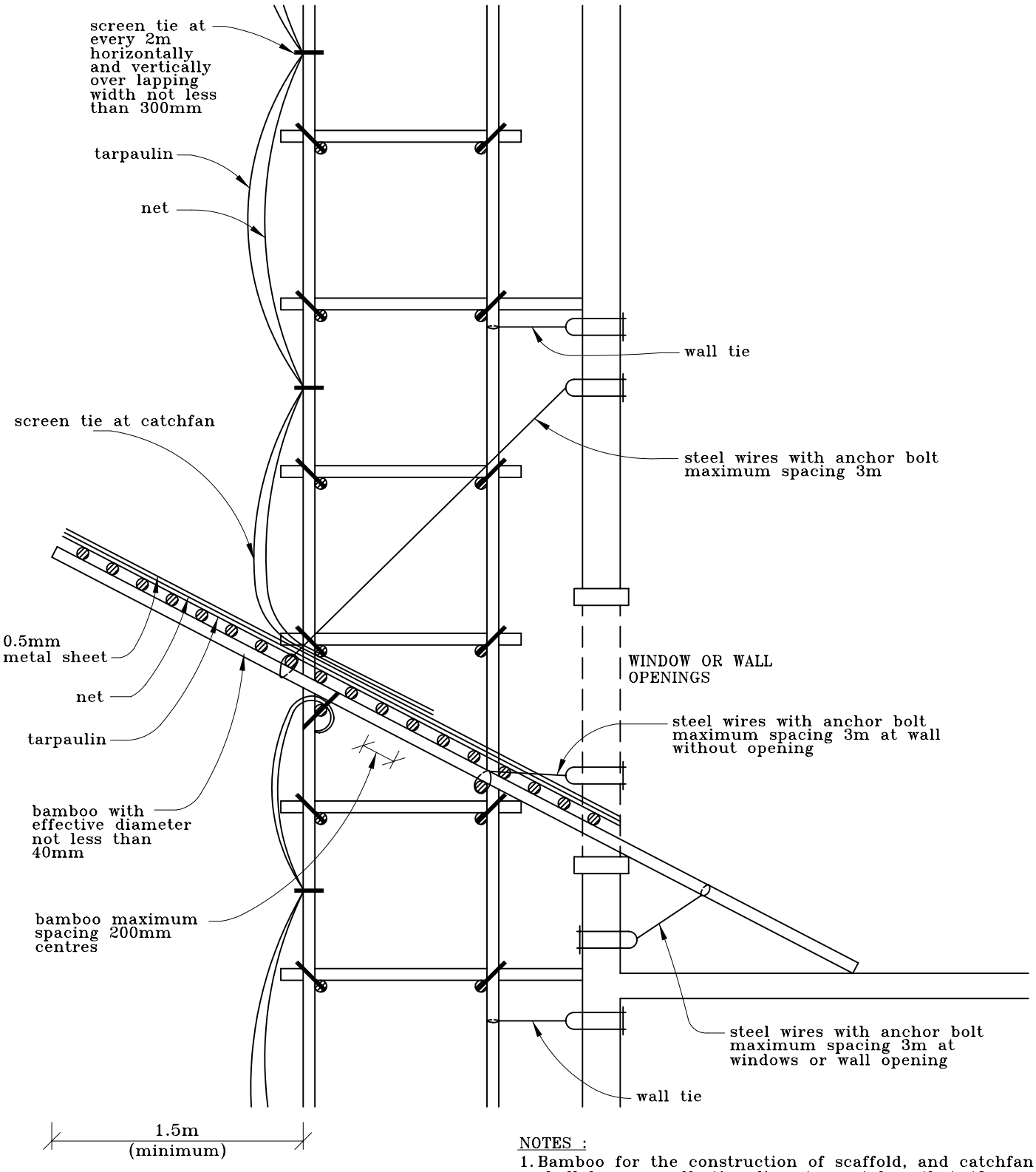

NOTES :

1. Bamboo for the construction of scaffold, and catchfan shall have an effective diameter not less that 40mm.
2. Metal sheet, net and tarpaulin shall be fastened to the bamboo deck at 4 corners of the sheet or at spacing no more than 1.5m apart whichever is less.

FIGURE 3.3 TYPICAL DETAIL FOR BAMBOO CATCHFAN AND SCREEN COVER

3.5 Temporary Supports

3.5.1 General

(A) Requirements

Temporary supports to the structure or the elements of the structure being demolished shall be provided for any or combination of the following conditions:

(1) when the whole or any part of the structure is subjected to excess loading derived from the demolition activities, movement of powered mechanical plants or debris accumulation;

(2) when any part of the structure or any element being demolished is not self-supporting; or

(3) when the temporary stability of the structure or its elements could be impaired as a result of the demolition activities.

Temporary supports shall not be removed until its supporting loads are completely removed.

On the other hand, temporary supports shall be removed as much as possible and practicable after demolition. In the case when temporary supports have to remain, the Owner, his Authorized Person, Registered Structural Engineer and Registered Specialist Contractor (Demolition) shall be responsible for routine inspection and maintenance of such temporary works until they are completely removed.

(B) Cantilevered Structures

Temporary supports shall be required during the demolition of cantilevered structures.

Anchorage or holding down load of the cantilevered structure must not be removed prior to the demolition of the cantilever itself unless the cantilever has been temporarily supported.

Demolition of external cantilevered structures facing public streets and which are higher than 4m above ground and offset from the site boundary at a distance less than one half of the height of the building to be demolished may affect the safety of the public. In demolishing these external cantilevered structures, the areas underneath them shall be protected by temporary platforms which are designed to resist both the anticipated demolition loading and construction loading, unless the cantilevered structures are demolished by cut and lift, or other similar techniques.

(C) Catch Platform

Catch platform shall be provided on top of the covered walkway in accordance with the requirements and design criteria as described in 3.2.

Catch platform shall also be provided underneath structural elements when the area adjacent to or directly underneath the said structural element requires protection from falling debris or other potential hazard caused by the demolition. These structural elements generally include, but are not limited to, projected canopies and balconies. Depending on the demolition process, catch platforms may be required underneath special structures such as external architectural features and prestressed concrete elements. Catch platform shall be installed prior to commencement of demolition. Catch platform shall be designed to support the anticipated loading condition during the demolition process.

(D) Adjacent Building

Temporary supports shall be provided to adjacent properties including, but not limited to, buildings, public or private utilities, slopes, retaining walls or land when the removal of the building or any part of the building being demolished could affect the stability of such properties. Common features, such as truncated continuous beams, exposed party walls and common staircases, shall be protected and stabilised.

Safe ingress and egress for adjoining properties shall be maintained. Adequate supports shall be provided to maintain the stability of common staircases for maintaining continuous access for the adjoining properties. Demolition project, such as the tenement house, may involve the removal of structural members that are part of the integral structure for supporting the remaining building. Appropriate supports to brace the structure shall be installed.

(E) Incomplete Demolition Projects

When a demolition project is shut down for a prolonged period before its completion, the remaining structure, if any, shall be stabilised by temporary support and/or bracing systems.

3.5.2 Materials and Types

(A) Materials

The temporary supports used for demolition shall be built with structural steel, heavy timber, fill embankment/buttress, or other material which is considered to be appropriate for the purpose.

(B) Pre-manufactured System

Pre-manufactured components such as tubular shores, telescope steel props, framed towers, etc., may be used as temporary supports provided their design capacity and their erection and maintenance requirements are followed in strict accordance with manufacturer's recommendations. Where the design capacity of a pre-manufactured component cannot be established by standard structural design and analysis, tests shall be performed to establish the design capacity.

(C) Existing Structure

Existing non-structural concrete or partition walls shall not be considered as part of the temporary support system unless it is shown by structural analysis that they are adequate for the purpose.

(D) Used Timber

Timber which has been damaged or has deteriorated due to repeated use, insect, decay or chemical attack shall not be used.

(E) Used Structural Steel

Used structural steel shall not be employed unless pre-approved by the Registered Structural Engineer. Where used structural steel is employed, the actual dimensions of the steel section shall be measured and its section properties shall be calculated on the basis of the least cross-sectional area including appropriate allowances for any existing bolt holes, etc. Where the material sources are not known, material properties shall be checked.

All used structural steel with excessive pre-existing bolt holes shall be repaired. Steelworks that has been repaired by welding may be used provided that the remedial work has been carried out according to the Code of Practice on Structural Use of Steel.

3.5.3 Loads

(A) Gravity Loads

The temporary support systems shall be designed to simultaneously withstand, all of the following loads:

(1) construction loads such as the construction operatives, hand tools and small equipment;

(2) debris accumulation and impact from fallen debris; and

(3) heavy machinery used.

Subject to a detailed evaluation for special circumstances, in no case shall the construction loads due to item (1) be assumed to be less than 1.5 kPa.

Loading due to items (2) and (3) shall be established by the actual weight of the debris likely to be accumulated and the weight of machinery to be used. In the case where no working load is available, minimum impact factor of 1.25 shall be applied to the static weight of the machinery for the purpose of design for the temporary works to account for the vibration from moving equipment on a suspended floor.

(B) Lateral Loads

To ensure the lateral stability of the temporary supports, they shall be designed to withstand the greater lateral loads of either:

(1) The combination of any calculated or reasonably anticipated lateral forces which shall be applied to the temporary support due to adjacent slope/retaining wall or building, moving machinery or impact from dumping of demolition debris and wind force, (The wind force shall be determined in accordance with the Code of Practice on Wind Effects in Hong Kong and may be excluded if the temporary support is not exposed to wind loading and its supported structure is provided with its own lateral stability system against wind loading); or

(2) A minimum of 3% of total vertical loads at the centre of gravity of these applied loads, or a minimum of 1.5 kN per metre length of the supported structure, whichever is greater;

(C) Design Consideration for Temporary Support

(1) All temporary support systems shall be supported on adequate foundations or floors. In the case when the immediate floor below the floor under demolition is not adequate to carry the imposed loading from the demolition activities, shoring shall be carried down to the lower floors until adequate support is achieved. Relative stiffness of the supporting props to the supported members shall be considered in determining the proportion of loadings shared by each propped floor;

(2) The lower floors may be allowed to carry the balance of the excess loading provided that their support capacities are not exceeded. The shores on the lower floors shall be aligned in the same position on each floor to provide continuous support without causing punching shear or reverse bending in the lower floors;

(3) Attention shall be paid to avoid placing the temporary supports on foundations which may exhibit intolerable differential settlements; and

(4) The load capacity of the floor slabs shall be checked to ensure that they can adequately resist the concentrated loads from the temporary supports. Distributing the loads through the use of sleepers and base plates may increase the capacity of the floor slab.

3.5.4 Structural Analysis and Design

The analysis and design of the support system and its components shall comply with the appropriate codes as listed in Appendix D or other well established international codes or provisions whenever applicable.

3.5.5 Temporary Propping System

Prefabricated propping system may be used to support the operation of the mechanical plant, or other loading during the demolition process on a suspended floor. A guideline for propping requirements under typical loading conditions is depicted in Table 3.4. Alternative propping arrangement with steel props of different bearing capacities to suit particular sites may also be used based on engineering approach.

Table 3.4 Propping Requirements on the Operation of Mechanical Plant on Suspended Floor

Design imposed load of floor to be demolished	3 kPa	5 kPa	7.5 kPa	12.5 kPa
Maximum weight of mechanical plant allowed	11,600 kg	11,600 kg	11,600 kg	11,600 kg
Minimum no. of consecutive floors required to distribute mechanical plant loading, through propping	5	3	2	2
Minimum no. of consecutive floors required to distribute localised loading from temporary ramp, through propping	5	4	3	2
Maximum spacing of steel props in each direction	1.2m	1.2m	1.2m	1.2m

The application of the propping requirements in Table 3.4 shall follow the limitations and design requirements as listed below:

(A) The propping requirements are not applicable to special structures and unconventional layout as described in 2.1.3(A)(3);

(B) In general, debris accumulation shall not be permitted unless the debris accumulation is justified by engineering calculation;

(C) The propping design is based on the use of structural steel access ramp. The gradient of the ramp shall not be steeper than 30°;

(D) Minimum bearing capacity for the steel prop shall not be less than 25 kN for supporting the mechanical plant and 45 kN for area under the access ramp;

(E) The props shall be braced to provide lateral restraints in at least 2 directions;

(F) The top and bottom supports of props shall be adequately secured and wedged tight; and

(G) Adequate spreader shall be provided for props bearing on ground, if necessary, to avoid undue settlement.

3.5.6 Erection and Dismantling

(A) All temporary supports shall be erected strictly in accordance with the approved plans and/or in accordance with the manufacturer's recommendations which shall comply with the appropriate codes listed in Appendix D or other equivalent international codes or provisions whenever applicable. All pre-manufactured systems and their accessories shall be examined for structural defects. Any damaged components and their accessories shall be discarded;

(B) All vertical supports shall be erected and maintained plumb as much as possible. Other arrangements may be acceptable as long as the supporting structural members are not stressed beyond the acceptable limits;

(C) All bracing shall be installed in accordance with the approved plans and the manufacturer's recommendations. Its connections to the main members shall be checked to ensure tight fit and adequacy; and

(D) All temporary supports shall not be dismantled or modified until their use is no longer required. The design of the temporary supports shall ensure that they can be dismantled safely without imposing danger to the workers or the public.

3.6 Protection of Properties

3.6.1 General

Stability treatment shall be provided to protect building elements that may be affected by the demolition project. The design of the bracing system shall be based on a structural assessment and engineering evaluation to provide necessary and sufficient protection for the affected properties.

3.6.2 Party Walls and External Walls

Party walls that separate the adjoining building and the demolition project shall remain and be protected during and after the demolition project. Redundant party wall shall be removed as far as possible. Demolition of structural elements adjacent to the party wall or the external wall of adjoining building (hereinafter in section 3.6.2 referred to as external wall) shall be performed by manual method with extreme care to prevent any damage to the party wall or the external wall.

The party wall or external wall stabilisation and treatment shall be applied on each floor immediately after the said floor is demolished.

(A) Waterproofing

The party wall or external wall shall be protected against infiltration and water seepage when it is exposed to the weather. Roof lines and wall joints are more susceptible to water leakage problems and shall be checked for waterproofing treatment. All loose bricks or fill materials shall be removed. All openings and voids shall be filled with concrete.

(1) Waterproofing may be achieved by cement mortar treatments. The application of the cement-mortar finish shall follow the procedures below:

(a) The surface of the party wall or external wall shall be thoroughly cleaned;

(b) Application of bonding agent in accordance with manufacturer's recommendation;

(c) Cement exterior finishing shall be applied in two coats:

(i) The first coat shall have a minimum thickness of 10 mm with a cement-lime-sand mix ratio of 1:2:6;

(ii) The second coat shall have a minimum thickness of 10 mm with a cement-lime-sand mix ratio of 1:3:6.

(2) Waterproofing paper may be used as temporary treatment to protect the party wall or external wall. The waterproofing paper on the upper row shall always overlap the row of paper immediately below. The waterproofing paper shall be securely fastened to the building wall.

(3) Waterproofing to party wall or external wall shall be carried out as soon as practicable. In general, such water proofing work shall be performed as building demolition progresses.

(B) Structural Supports

The exposed party walls or unprotected external wall may be temporarily supported by timber raking shores or installation of stiffeners consisting of structural steel members with concrete cover or other corrosion protective system as designed by the Registered Structural Engineer. If structural conditions allow, the stability of the party wall or the external wall may be improved by leaving a portion of the common beams and slabs which are connected to the party wall.

The layout of the temporary supports to the party wall or the external wall shall be considered in the new construction. Permanent support is required to ensure continuity of the party wall support and minimise any possible interference. The temporary wall treatment shall be maintained until the application of the permanent treatment which may be incorporated in the construction of the new building.

3.6.3 Foundation Support

A thorough evaluation shall be conducted for demolition involving basement, below ground structures or any structure that may affect the foundation of the adjoining properties. Appropriate shoring, underpinning or other protective measures shall be installed if necessary. Details of the demolition of the underground structure shall be referred to in 5.9.

3.7 Protection of Traffic

3.7.1 Adjacent Traffic

Any closure of roads and walkways may seriously impact the traffic/pedestrian circulation and cause disruption to the public. Therefore, as far as practicable, the installation of the precautionary measures and the demolition operation which causes any closure of traffic lanes shall be avoided. If unavoidable, prior permission/ arrangement of the Transport Department and the Hong Kong Police Force shall be obtained. Temporary closure of a traffic lane may be considered for night work. Temporary closure of a traffic lane may also be considered for exceptional cases where there are no other practical alternatives to safely demolish the building elements such as projected canopies, balconies or verandah.

3.7.2 Traffic Impact Assessment

If traffic closure is necessary, a proper Traffic Impact Assessment shall be submitted to the Transport Department and the Hong Kong Police Force for their review and approval. The Traffic Impact Assessment shall conform to the requirements of the Transport Department.

3.7.3 Site Access

Safety measures for construction access to and from the site shall be considered in a demolition project. Proper headroom, sightline, segregation, loading/unloading location, illumination etc. shall be provided for the protection of vehicular and pedestrian traffic from the ingress and egress of construction vehicles.

3.8 Special Safety Considerations

3.8.1 Training and Communication

Demolition workers, including plant or equipment operators, shall go through proper job safety training and be informed of the potential hazards by attending training sessions as well as on-the-job training. At present, the Construction Industry Training Authority has organised relevant training courses for site supervisors/foremen and plant or equipment operators.

They are also required by the Labour Department to attend other safety training courses for construction works. Site safety and project understanding shall be promoted through an induction meeting at the beginning of the project, where information related to the project such as the proposed method and procedures, potential danger during the operation, safety measures and project specifics can be disseminated to all on site personnel.

The safety concept can be maintained by regular safety meetings throughout the project period. Site safety attitude may be cultivated by strict enforcement of the safety regulations by the site supervisor.

Apart from instilling the importance of safe attitudes to workers and plant or equipment operators, they shall be trained by competent instructors on the following to observe safety precautions in accordance with regulations as listed in Appendix D where appropriate:

(A) Working at Heights;

(B) Working in Confined Spaces;

(C) Working with Lifting Appliances and Lifting Gears;

(D) Use of Personal Protective Equipment;

(E) Hot Works;

(F) Handling of Chemicals;

(G) Health Hazards in Demolition Works; and

(H) Safe plant operating zones and safe plant manipulation zones.

3.8.2 Equipment Maintenance

All equipment shall be tested and examined before use. They shall be properly stored and maintained. The equipment shall be inspected daily and results of the inspection shall be recorded accordingly. A detailed safety instruction shall be provided to cater for specific situations of the project, if necessary.

3.8.3 Electrical Safety

A properly connected power source from a local electric utility supplier or a mobile electricity generator shall be utilised in demolition sites. The safety requirements given in the Factories and Industrial Undertakings (Electricity) Regulations shall be adhered to.

3.8.4 Fire

All flammable goods shall be removed from site unless they are necessary for the works involved. Any remaining flammable goods shall be stored in proper storage facilities. All furniture, timber, doors, etc. shall be removed before any welding work is performed. Fire fighting appliances shall be provided and maintained in working conditions.

The Construction Site (Safety) Regulations require the contractor to maintain in good condition and free from defects all fire fighting appliances provided in such construction site.

Details of emergency access are further discussed in 3.8.6.

3.8.5 Occupational Health

The health of workers on site shall be properly protected in accordance with the relevant subsidiary regulations of the Factories and Industrial Undertakings Ordinance and the Occupational Safety and Health Ordinance with particular attention to the following areas:

(A) Exposure to Dust;

(B) Chemical Exposure;

(C) Heat Stress and Ventilation;

(D) Noise Exposure;

(E) Medical and First Aid Facilities;

(F) Sanitation; and

(G) Occupational Diseases.

3.8.6 Emergency Exit Requirements in Demolition Sites

Emergency exits shall be provided during building demolition. In case of any emergency evacuations, the emergency exit will serve as a lifeline for transportation of injured workers. A minimum of one exit route shall be maintained and designated as the emergency exit at all times during the demolition. Adequate lighting and fire extinguishing equipment shall be provided. Emergency exit shall be properly protected, free of obstruction, and properly marked with exit signs or other indications to clearly show the route. All workers shall be informed about the exit route.

3.8.7 Vibration

Demolition work will cause vibration to neighbouring buildings or structures to various extent, depending on the method of demolition. The most serious vibration is caused by implosion. The effect of vibration caused by implosion are categorised as follows :-

1. permanent ground distortion produced by blast-induced gas pressures;
2. vibratory settlement of foundation materials;
3. projectile impact (i.e. blast fly rock); and
4. vibratory cracking from ground vibration or air blast.

These effects will have to be dealt with specifically in the method statement for implosion. For other mechanical demolition methods, the vibration effect is usually less than some other construction processes, such as percussive piling and blasting. In some cases, the traffic vibration caused by heavy duty tractors are more significant than that caused by mechanical demolition. In order to identify the actual cause and effect of vibration, Registered Specialist Contractors (Demolition) are advised to carry out vibration monitoring during demolition. As a general guideline, the peak particle velocities at any adjoining structure shall not exceed 15mm/sec for prolonged vibration caused by mechanical demolition.

3.9 Environmental Precautions

The general requirements to minimise environmental impacts from construction sites can also be applied to demolition processes. The following sections contain some of the procedures to be adopted:

3.9.1 Air Pollution

Concrete breaking, handling of debris and hauling process are main sources of dust from building demolition. Dust mitigation measures complying with the Air Pollution Control (Construction Dust) Regulations shall be adopted to minimise dust emissions. Burning of waste shall not be allowed. Diesel fumes generated by mechanical plant or equipment shall be subject to the control of the Air Pollution Control (Smoke) Regulations.

3.9.2 Noise

Noise pollution arising from the demolition works including, but not limited to, the use of specified powered mechanical equipment (SPME), powered mechanical equipment (PME), such as pneumatic breakers, excavators and generators, etc., scaffolding, erection of temporary works, loading and transportation of debris, etc. affects the workers, and the sensitive receivers in the vicinity of the demolition site. Silent type PME shall be used to reduce noise impact as much as practicable. Demolition activity shall not be performed within the restricted hours as established by EPD. Currently under the Noise Control Ordinance, noise from the use of SPME and PME within restricted hours is governed by a Construction Noise Permit (CNP) system which is further discussed in Appendix E.

3.9.3 Water

The discharge of wastewater from demolition sites requires a valid discharge licence from the EPD and the application of such a licence shall be made under the Water Pollution Control Ordinance (WPCO). Effluent shall be treated to the standards as stipulated in the licence before discharge.

As stated in 3.10.3, the Registered Specialist Contractor (Demolition) shall maintain proper control of temporary water supply and an effective temporary drainage system.

3.9.4 Hazardous Materials

If removal of asbestos containing material is needed, an Asbestos Investigation Report (AIR) shall be submitted to EPD. An Asbestos Abatement Plan (AAP) shall be submitted at least 28 days before the asbestos abatement work commences. The asbestos abatement works

shall be carried out in accordance with the Air Pollution Control Ordinance (APCO) and the Factories and Industrial Undertakings (Asbestos) Regulations before demolition. The procedure for notification is discussed in Appendix E.

Other materials such as LPG cylinders in domestic flats, toxic and corrosive chemicals for industrial undertakings, and any other hazardous materials have to be identified and properly handled and removed prior to the commencement of the demolition of the building.

The management of waste must fully comply with the Waste Disposal Ordinance. Additionally, management of waste which is classifiable as a chemical waste must also comply with the Waste Disposal (Chemical Waste) (General) Regulation. The Environmental Protection Department should be consulted if in case of doubt about the waste classification.

3.10 Debris and Waste Handling

3.10.1 Chutes

Debris waste and other materials shall not be thrown, tipped or shot down from a height where they are liable to cause injury to any person on or near the site.

Existing lift shaft, light well and openings on floor may be used to convey debris down the building floors. Areas adjacent to the openings of these features used as a chute shall be barricaded when they are not in use. Warning signs shall be posted to prevent workers from entering the area. As an option, plastic chutes may be used inside the floor openings and lift wells to minimise noise and confine the falling debris.

(A) Lift Shaft

Lift shaft may be used to convey debris inside the building. The openings to the elevator shall be adequately enclosed to prevent spilling out of debris.

(B) Light Well

All the glass windows in the light well shall be taken out or protected before using the light well for conveyance of debris in order to minimise any dangerous situation.

(C) Opening on Floor

Openings on the floor may be used to convey debris. If openings are created on the floor, the total openings shall be less than 25% of the total aggregate floor area. Each opening shall not be larger than 900 mm × 900 mm unless otherwise substantiated with

structural justifications with regard to the safety of the remaining structure and minimizing the possible risks arising from the impact force induced. Openings shall not cut through structural support elements that may affect the stability of any structural components.

(D) Exterior Chutes

No demolition materials shall be allowed to fall freely outside the building unless it is confined within a chute. If exterior chutes are used, adequate clear spaces shall be provided for their operation. Temporary refuse chutes, assembled from old metal barrels shall not be used. The chutes shall not cause any obstruction to the public. A dust barrier shall be provided if the chute outlet is near public access. The chute shall be designed and constructed with adequate strength and support to allow safe conveyance of debris.

3.10.2 Debris Recycling

Better site management and practice would not only prevent the mixing of the inert portion together with the non-inert portion of construction and demolition waste, but could also facilitate and allow on site sorting, and separation at source of construction and demolition waste.

The method of 'selective demolition' should be adopted as far as practicable. It involves demolition and removal of wastes of the same category one at a time. The goal is to facilitate recycling of wastes for beneficial reuse, thus minimizing the burden on municipal landfills and public filling areas. In general, domestic wastes such as furniture, household appliances, etc., metal components such as window frames, pipes, etc., timber components such as doors, wooden floors, etc., other wastes such as tiles, asphaltic materials, ceramic products should be removed first. Most of these materials may be recycled. The building demolition shall begin after all the above non-structural materials have been stripped and removed.

The sequence of demolition shall be planned to allow the separation and sorting of building materials.

Concrete and/or brick debris shall be broken down into smaller sizes and separated from reinforced steel for disposal.

Concrete debris may be pulverised into aggregate size and used for road base, temporary haul roads, fill materials or aggregates for concrete. Old bricks may be salvaged for reuse as architectural features or other uses.

Broken concrete may be disposed of at construction and demolition (C&D) materials recycling facilities for processing into recycled

products and aggregates for beneficial reuse. In the event that broken concrete is mixed with some other wastes, broken concrete should be sorted out on site from the mixture of wastes, before disposal at a C&D materials recycling facilities. As regards the way for facilitating the recycling of broken concrete, Authorized Persons / Registered Structural Engineers may seek advice from Civil Engineering and Development Department during the planning stage for demolition. (Web site : http://www.info.gov.hk/cedd/).

3.10.3 Dust Minimization

To prevent dust generation during the debris hauling, water spraying shall be applied during the hauling process. However, the Registered Specialist Contractor (Demolition) shall ensure proper control of water supply and floor drainage system in order to avoid flooding which is a nuisance and may cause overloading of floors.

3.10.4 Debris Accumulation

In general, the debris accumulation on the floors is not allowed unless the debris accumulation is justified by engineering calculations. Debris shall not accumulate against the hoarding or external wall. Excessive accumulation of debris may cause overloading condition and may induce lateral loading on the walls and shall be avoided. The propping design shall include the debris loading.

3.10.5 Debris Disposal and Management System

To avoid accumulation of debris and to make sure that they are disposed of promptly, the Authorized Person / Registered Structural Engineer should ensure that a debris disposal and management system is prepared and implemented by the Registered Specialist Contractor (Demolition).

The debris disposal and management system should clearly lay down the following details :

(A) method of handling demolished building debris;

(B) the routing and movement of debris from each floor to on grade holding area prior to leaving the site;

(C) means of transportation of debris off site;

(D) time and frequency of debris disposal off site;

(E) record scheme on the tonnage of each truck load, truck licence plate, driver's name, trip tickets and location of dump site; and

(F) the site supervisory personnel responsible for the debris management system.

3.10.6 Debris Loading

In the case when loaders and trucks have to work at ground floor level, the following conditions shall be considered:

(A) The route of loaders and trucks shall be checked to avoid conflict with temporary propping supports;

(B) The working headroom at ground floor shall be checked, any local strengthening to suit removal of mezzanine floor or first floor beams shall be properly designed; and

(C) Loading of the debris shall conform to the Code of Practice for the Loading of Vehicles by the Transport Department.

3.10.7 Waste Management

On-site sorting of surplus construction and demolition (C&D) material is strongly recommended so that inert material can be disposed of at public filling areas as far as practicable, and the remaining C&D waste disposed of at landfills. Dumping Licences issued to lorry owners by the Civil Engineering and Development Department for delivering public fill to public filling areas require that material to be disposed of at public filling areas must comprise only earth, building debris, broken rock and concrete. Such materials shall be free from marine mud, household refuse, plastic, metal, industrial and chemical waste, animal and vegetable matter and other matter considered unsuitable by the Filling Supervisor. Small quantities of timber mixed with otherwise suitable material may be permitted.

All construction and demolition materials arising from or in connection with demolition work shall be sorted on-site and be separated into different groups for disposal at landfills, public filling areas, in filling areas provided by the Registered Specialist Contractor (Demolition), or recycling as appropriate. All public fills to be disposed of at public filling areas shall be sorted and broken down according to the Dumping Licence conditions.

The Registered Specialist Contractor (Demolition) is advised to submit a waste management plan for the sorting, processing and disposal of C&D materials arising from or in connection with the demolition work to the Authorized Person / Registered Structural Engineer for his approval before the commencement of the works.

List of disposal facilities are included in the Appendix E.

3.11 Inspection and Maintenance

(A) Frequency

Site inspection shall be performed by the Authorized Person or his experienced and competent representative, the Registered Structural Engineer or his experienced and competent representative and the Registered Specialist Contractor (Demolition) at the corresponding frequencies not less than those specified in the Technical Memorandum for Supervision Plans and the Code of Practice for Site Safety Supervision to ensure that the temporary structures, catchfan, catch platform and other precautionary safety measures are in good condition. Any movement, damage or distortion to the temporary structures shall be identified and repaired, if necessary.

The Registered Specialist Contractor (Demolition) shall perform a daily inspection to remove any debris accumulated on catchfans and catch platforms. The contractor's representative shall provide full time continuous site supervision and check the condition of the demolition work including the unstable and/or partially demolished structures and ensure that they are stable and safe each day before leaving the site.

Regular inspection shall also include preventive and protective measures adopted to protect the workers' health such as dust suppression measures and personal protective measures.

In the case when discrepancies from the Method Statement are discovered during inspection, the inspector shall report to his senior, if applicable, and keep the Authorized Person and the Registered Structural Engineer informed of the discrepancies. No further demolition shall be carried out until rectification work has been completed and written instruction to commence site work is issued by the Authorized Person or the Registered Structural Engineer.

(B) Unsafe Condition

If any unsafe conditions are present, all demolition activities shall be immediately halted until the unsafe conditions are rectified. All unsafe condition shall be reported to Authorized Person/Registered Structural Engineer for further instruction.

(C) Scaffolding

Inspection and maintenance of scaffolding shall be performed in accordance with the Factories and Industrial Undertakings Ordinance and its subsidiary regulations including the Construction Sites (Safety) Regulations and codes of practice on scaffolding safety. The scaffold shall not be used unless:

(i) It has been inspected by a competent person before being taken into use for the first time;

(ii) It has been inspected by a competent person after any substantial addition, partial dismantling or other alteration;

(iii) It has been inspected by a competent person after any exposure to weather conditions likely to have affected its strength or stability or to have displaced any part;

(iv) It has been inspected by a competent person at regular intervals not exceeding 14 days immediately preceding each use of it; and

(v) A report has been made and signed by the person carrying out the inspection in an approved form containing the prescribed particulars which include a statement to the effect that the scaffold is in safe working order;

3.12 Post-Demolition Precautions

Once the demolition is completed, the site shall be reinstated to eliminate any potential hazard to the public. The following precautionary measures shall be considered:

(A) The site shall be levelled and cleared of any debris. Adequate drainage shall be provided;

(B) If the new development is not immediately commenced, the site shall be completely enclosed to prevent public trespassing;

(C) Supports to adjacent building structures, weather-proofing and stabilisation of exposed party walls shall be completed. A final inspection by the Authorized Person and the Registered Structural Engineer on the supports of adjacent structures shall be conducted to ensure satisfactory and safe conditions before leaving the site. If temporary shoring remains on site, inspection and maintenance as described in 3.11 shall be continued until the temporary shoring is removed or replaced by permanent supports;

(D) Any excavation shall be braced and stabilised; and

(E) For sloping sites, and/or sites with retaining wall supporting ground, the following additional precautionary measures shall be included:

(1) The ground surface shall be sealed up to prevent water infiltration;

(2) Any unstable structures and ground shall be stabilised; and

(3) The demolition plans shall be provided to the subsequent foundation or site formation contractor so that any temporary support works constructed during demolition are maintained during the new development phase.

4. METHODS OF DEMOLITION

4.1 General

The choice of demolition method depends on the project conditions, site constraints, sensitivity of the neighbourhood and availability of equipment.

Top down methods are applicable for most sites, particularly for those situated in busy urban areas. Other mechanical methods applied from the outside of the building may be suitable for projects that have sufficient clear spaces. For structural projections, such as balconies, canopies and verandahs extending beyond the building lines, demolition by hand held tools or the cut and lift process may be a safe solution. Methods using wrecking ball and explosive should be adopted with extreme care when well planned adequate precautionary measures are provided. The applications of demolition methods are summarised in Table 4.1.

The suggested procedures described in this Code of Practice are recommended good practices for demolition of common structural elements only. Each site has its specific features and conditions. The method, including detail procedures, shall be designed to accommodate the specific project requirements. In general, demolition should be carried out in the reverse order of construction, as far as appropriate.

4.2 Top Down — Manual Method

4.2.1 General

Top down method discussed below is the method that proceeds from the roof to ground in a general trend, there are particular sequences of demolition which may vary, depending on site conditions and structural elements to be demolished.

For reinforced concrete buildings, jack hammers are commonly used to break down the concrete. Oxy-acetylene torch could be used to cut the reinforcements. The structural elements shall be broken down gradually or by alternate methods as described in the following sub-section. The reinforcements shall remain until all the concrete connecting to or supported by the reinforcement is broken away or when its support is no longer required. Cantilevered canopies, balconies and exterior walls are critical elements in building demolition. In congested areas, these features could critically impact on the safety of the public. Demolition of these features shall be performed with extreme caution. If rope or tie wires are used to pull down the structural elements, the pulling wire must be at least 4 time stronger than the anticipated pulling force. In addition, workers shall be shielded from the rope or tie wires. The rope or tie wire shall be checked at least twice per day.

4.2.2 Demolition Sequence

Demolition sequence shall be determined according to actual site conditions, restraints, the building layout, the structural layout and its construction. In general, the following sequence shall apply:

(A) All cantilevered structures, canopies, verandahs and features attached to the external walls shall first be demolished prior to demolition of main building and its internal structures on each floor;

(B) When demolishing the roof structure, all lift machine rooms and water tanks at high level shall be demolished in "top down" sequence to the main roof level. In demolishing the external wall or parapet wall, the procedure as stated in 4.2.4 shall apply;

(C) Demolition of the floor slabs shall begin at mid span and work towards the supporting beams;

(D) Floor beams shall be demolished in the order as follows:

(1) cantilevered beams;

(2) secondary beams; then

(3) main beams.

In the case when structural stability of beams are affected, e.g., due to loss of restraints, the affected beams shall be propped prior to loss of support or restraint;

(E) Non-load bearing walls shall be removed prior to demolition of load bearing walls;

(F) Columns and load bearing walls shall be demolished after removal of beams on top; and

(G) If site conditions permit, the first floor slab directly above the ground floor may be demolished by machine sitting on ground level and mounted with demolition accessories.

4.2.3 Cantilevered Structures and Balconies

Cantilevered structures, balconies and canopies may project out of the building over the pedestrian footpath or in some cases over a portion of the traffic lane. Temporary supporting structures, catch platform and/or temporary platform shall be placed directly underneath them as precautionary measures. Details of the criteria for temporary design are referred to in 3.5. Common problems related to cantilevered structures are also discussed in 5.3. The general sequence of dismantling cantilevered slabs and beams is described in the following:

Table 4.1 Summary of General Characteristics of Demolition Methods

Method	Principle	Applicability					Operation Characteristics			Pollution Characteristics				Remarks
		Column	Beam	Slab	Wall	Foundation	Wrecking efficiency	Secondary effort	General Conditions	Noise	Vibration	Dust	Others	
Top down manual w/ jack hammer or pneumatic hammer	Breaking away the concrete by hand held jack hammer or pneumatic hammer	○	○	○	○	○	◎	None	- On a floor by floor downward sequence - Need precautionary measures for restricted site	●	◉	●		- Broad scope of application - Effective in narrow and localized place
Top down/ machine Percussive breaker	Breaking away the structure by machine mounted percussive breaker	○	○	○	○	○	○	None	- On a floor by floor downward sequence - Adequate floor support for machine - Need precautionary measures for restricted site	●	●	●		- Wide range of application - Good mobility
Top down/ machine hydraulic crusher	Breaking away the structure by machine mounted hydraulic crusher	○	○	○	○	◎	○	None	- On a floor by floor downward sequence - Adequate floor support for machine - Need precautionary measures for restricted site	◎	●	●		- Wide range of application - Good mobility - Ability to separate steel bars and frames
Hydraulic crusher w/ long boom	Breaking away the structure by machine mounted hydraulic crusher with long arm extension	○	○	○	○	◎	○	None	- Restrictive entry to work area - Flat and firm working ground - Adequate clear space	◉	●	●		- Wide range of application - Good mobility - Ability to separate steel bars and frames
Wrecking ball	Distruction by impact of steel ball suspended from a crane	○	◎	◎	○	●	○	None	- Restrictive entry to work area - Flat and firm working ground - Adequate clear space	◉	●	●	Protection from debris required	- Good efficiency - Poor application for underground columns and foundations
Implosion	Use of explosives	○	○	●	●	○	○	Yes	- Protection from noise, debris and vibration - Qualified blaster - Notification and evacuation of neighbourhood - Check and cautiously handle of misfiring	●	●	●	Protection from debris required	- Excellent demolition strength - Could shorten the work period and reduce labour - risk assessment required to be continued
Mechanical method w/ machinery	Toppling or breaking away structure by large machinery from outside the building	○	○	◎	○	●	○	Yes	- Prevent toppling in the wrong direction and uncontrolled collapse - Firm working ground	●	●	●	Protection from vibration required	- Good efficiency - Poor application for underground structures

Table 4.1 Summary of General Characteristics of Demolition Methods (Continue)

Saw cutting w/ circular saw or chain saw	Cutting with circular saw or chain saw	○	○	○	○	●	◎	Yes	- Solid working platform - Arrangement for hoisting out cut section	⭘	○	◎	Drainage required	- Allows precise separation
Wire saw cutting	Cutting with wire saw	○	○	○	○	●	◎	Yes	- Solid working platform - Arrangement for hoisting out cut section - Counter measure to prevent danger of wire breaks	⭘	○	◎	Drainage required	- Allows precise separation - Good for cutting massive structures
Drilling	Coring, drilling and cutting by stitch drilling	◎	◎	○	○	○	●	Yes	- Solid working platform	⭘	○	◎		- Allows precise separation - Good for cutting massive structures
Non explosive demolition agent	Expansion pressure from absorption of CaO or other chemical reactions	◎	◎	●	●	○	●	Yes		⭘	○	◎		- Good for foundation
Thermal lance	Use of intense heat by fusion of metal	◎	◎	◎	◎	●	●	Yes	- Protection of person and properties from intensive heat	⭘	○	◎	Fire damage protection required	
Water Jet	Jetting of water at high pressure	◎	◎	◎	◎	●	●	Yes	- Protection of person and properties from high pressure water	⭘	○	◎	Drainage required; water recyling preferred	

Explanation of Symbols for Table 4.1

Applicability:

- ○ Very effective
- ◎ Moderately to slightly effective
- ● Not efficient

Wrecking Efficiency:

- ○ Excellent
- ◎ Good
- ● Poor

Dust Particles:

- ○ Very little dust
- ◎ Moderate amount of dust
- ● Significant amount of dust

Vibration (regardless of whether it is continuous or discontinuous):

- ○ Not felt by the human body
- ◎ Very little effect on human
- ⭘ Moderate effect on human
- ● Significant effect

Noise :

- ○ 70 dB(A) or below (30m locality)
- ◎ 70 - 74 dB (A) (30 m locality)
- ⭘ 75 - 79 dB (A) (30 m locality)
- ● 80 dB (A) or above (30 m locality)

Noise level indicated above are for reference only. Actual noise level will depend on the machine used and site conditions.

(A) The exterior wall shall be demolished first, and detail is referred to in 4.2.4, Exterior Walls, Beams and Columns;

(B) Any structure or dead load supported by the cantilevered system shall be removed prior to demolishing the cantilevered slabs and beams;

(C) The concrete shall be broken down gradually starting from the exterior edge of the cantilevered floor, working inwards and toward its supporting beams. Figure 4.1 illustrates the demolition of cantilevered slab;

(D) The cantilevered beam shall be demolished after the demolition of the connecting floor slab. Demolition of the cantilevered beam shall not advance further than the floor slab so that the support for the slab is always maintained. Figure 4.2 illustrates the demolition of cantilevered beam with the slab; and

(E) Saw cut and lift may be used to dismantle the cantilevered features. The slab shall be cut into a manageable size and lifted away. The cantilevered beams shall be cut and removed after the removal of the slab load and any load supported by them. The cut and lift applications are discussed in 4.7.3.

4.2.4 Exterior Walls, Beams and Columns

(A) Brick in-fill Wall

(1) To avoid any potential hazard of bricks falling out of the building, all the brick in-fill shall be removed by pushing inward, before dismantling the reinforced concrete framing. Working platforms outside the building shall be used for removal of the brick in-fill walls. Brick removal shall begin from the top layer downwards. The works shall be carried out layer by layer with each layer not larger than 300mm;

(2) The reinforced concrete framing can be dismantled by taking down the individual beams and columns separately and/or by taking down the frame of a bay between two columns as described in 4.2.4(B), 4.2.4(C) and 4.2.4(D).

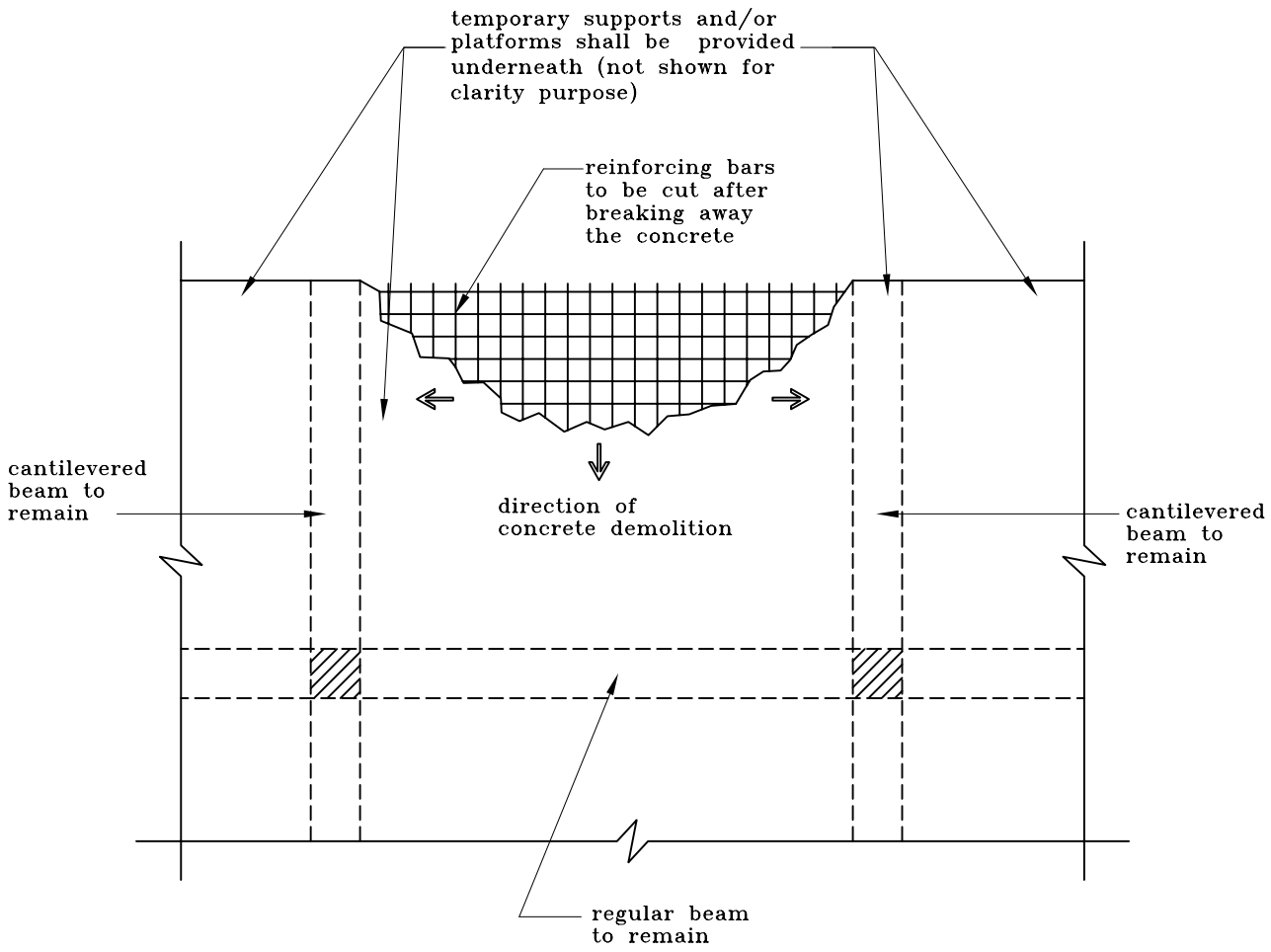

PLAN

FIGURE 4.1 DEMOLITION OF CANTILEVERED REINFORCED CONCRETE SLAB (MANUAL METHOD)

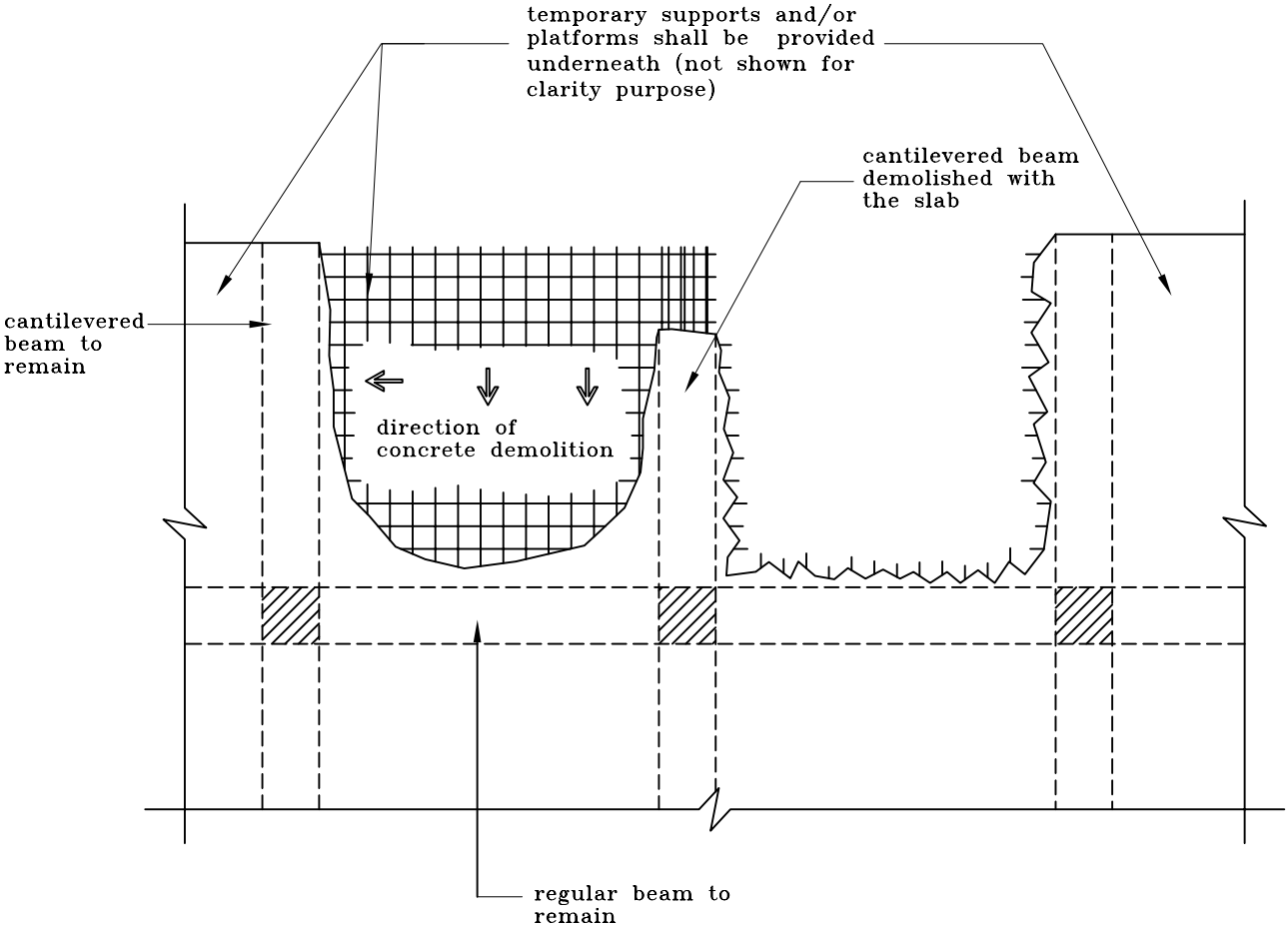

PLAN

FIGURE 4.2 DEMOLITION OF CANTILEVERED REINFORCED CONCRETE SLAB AND BEAM (MANUAL METHOD)

(B) Exterior Beam

The exterior beam may be demolished by gradually breaking away the concrete or by dismantling the entire beam section. Demolition of the exterior beams is illustrated in Figure 4.3 & 4.4 and described in the following:

(1) Wire and winch or other systems shall be used to secure the cross beam to other structural members;

(2) The concrete is first broken away at both ends near its column supports to expose the reinforcement;

(3) Reinforcement shall be cut at one end to allow the beam to partially drop. The wire shall safely winch the beam down to the building floor in a controlled manner; and

(4) The dismantling would be completed by cutting the reinforcement at the remaining end, and the beam will then be lowered completely in a controlled manner.

(C) Exterior Column

Exterior column may be demolished by the following procedures and as illustrated in Figure 4.5.

(1) The top of the column shall first be secured to a structural member by wire and winch;

(2) Pre-weakening shall be performed at the bottom of the column to reduce the pulling force and to ensure that the break occurs at the desired location. The concrete cover of the reinforcement shall first be removed. Reinforcement at the interior face shall remain. Reinforcement at the exterior face shall be cut immediately before the pulling of the column; and

(3) After pre-weakening, the column shall be pulled down by the wire and winch towards the interior in a controlled manner.

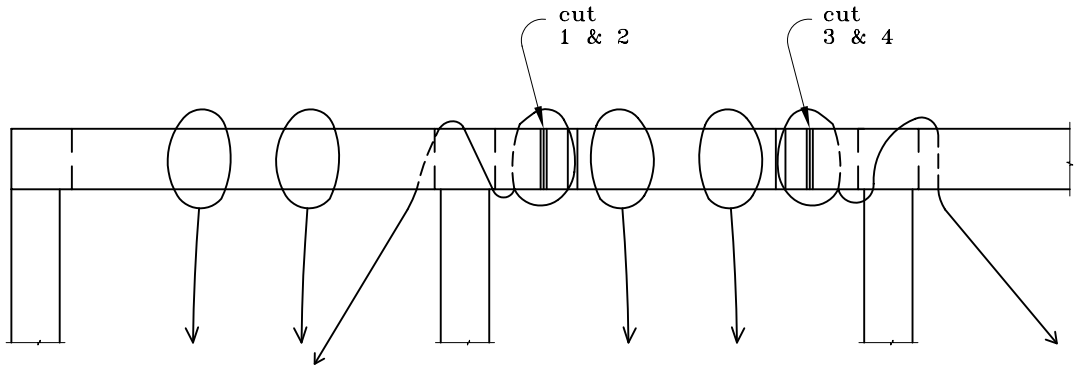

PLAN

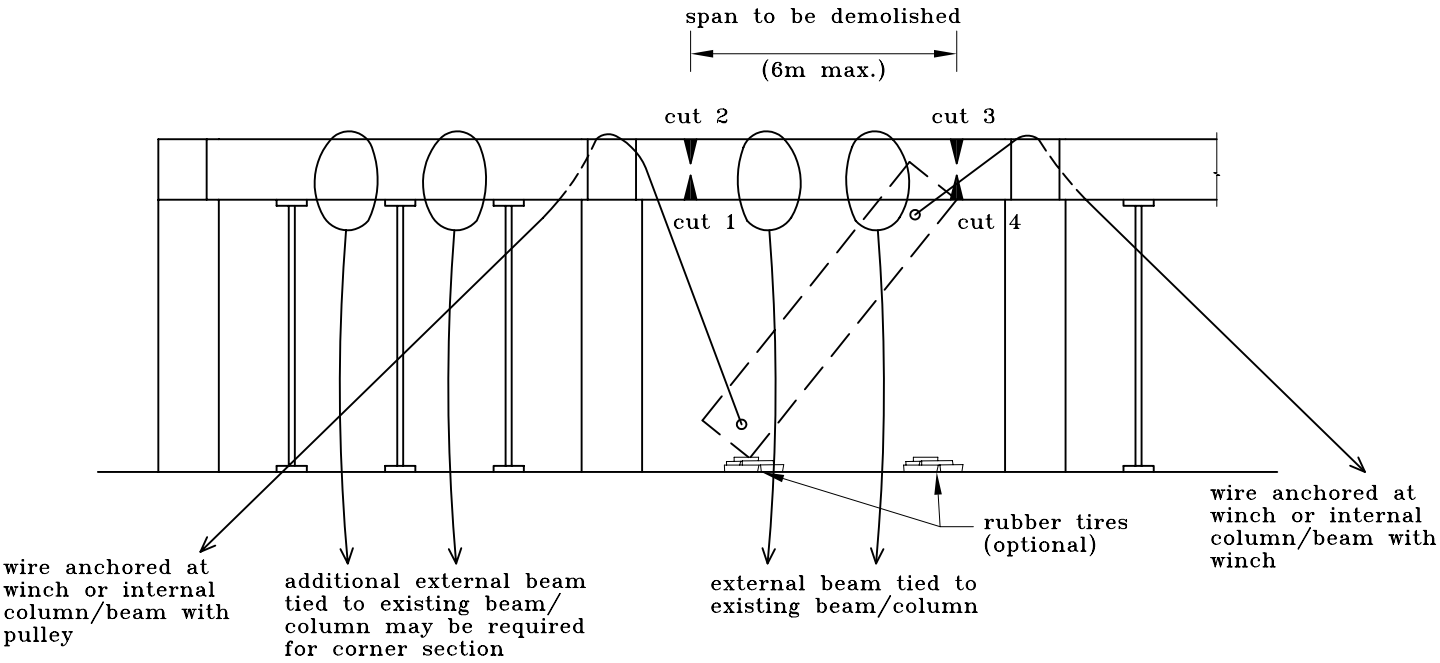

ELEVATION

1. Prop all span of external beam.
2. Tie the span of beam to be demolished.
   (details of the connection may refer to figure 4.4)
3. Remove props at span to be demolished.
4. Expose all reinforcement.
5. Cut reinforcement at cut 1, cut 2, and cut 3.
6. Lower the end at cut 1 & cut 2.
7. Cut reinforcement at cut 4.
8. Lower the beam.

Note : The tie wire are indicative. If there are permanent anchors or lifting machines available tie wire arrangements may be simplified to suit.

FIGURE 4.3 DEMOLITION OF EXTERNAL BEAM (MANUAL METHOD)

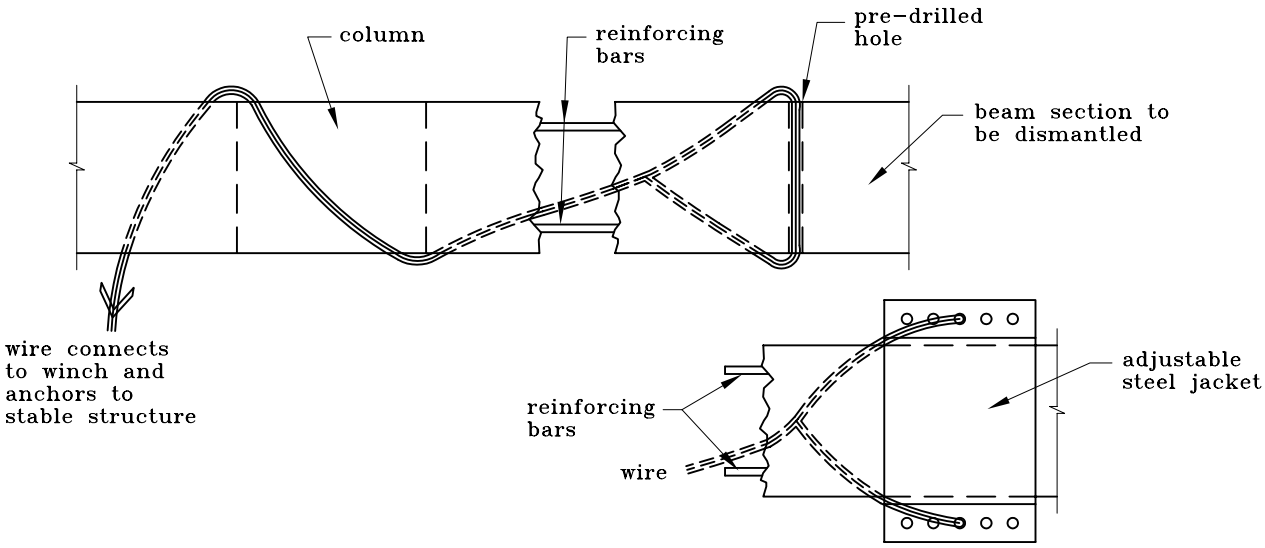

ALTERNATE CONNECTION TO BEAM

PLAN

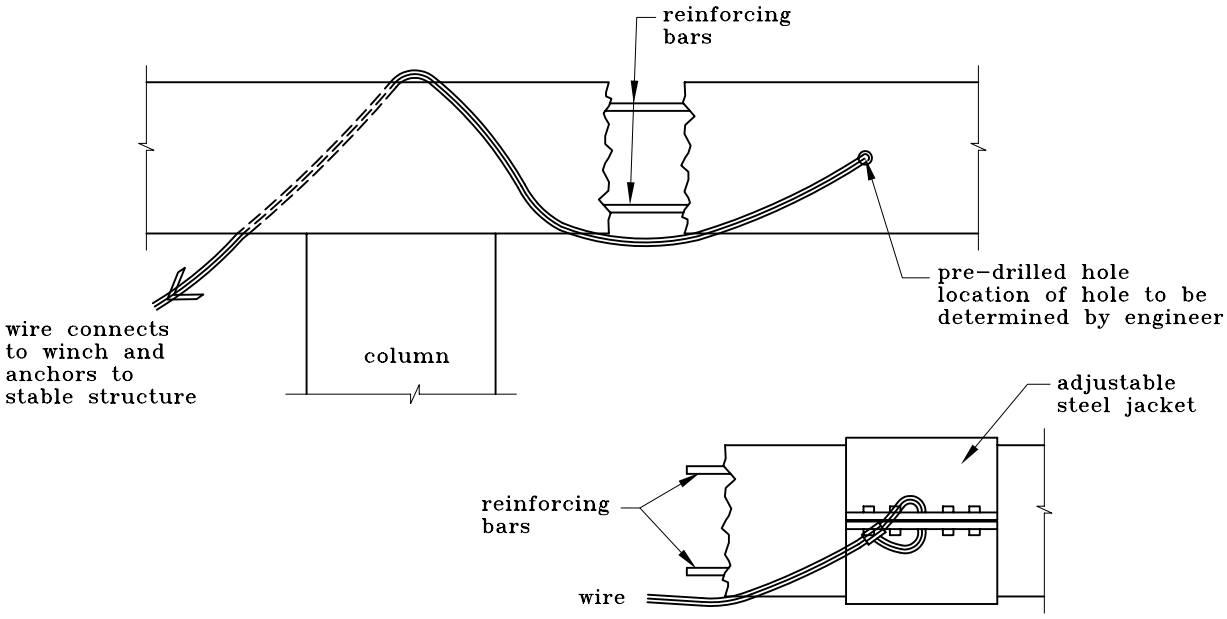

ALTERNATE CONNECTION TO BEAM

ELEVATION

Note :
The tie wire arrangement is for illustration purpose. It may be simplified to suit depending on the availability of structural anchor.

FIGURE 4.4 DETAILS FOR SECURING EXTERNAL BEAMS BEFORE DISMANTLING (MANUAL METHOD)

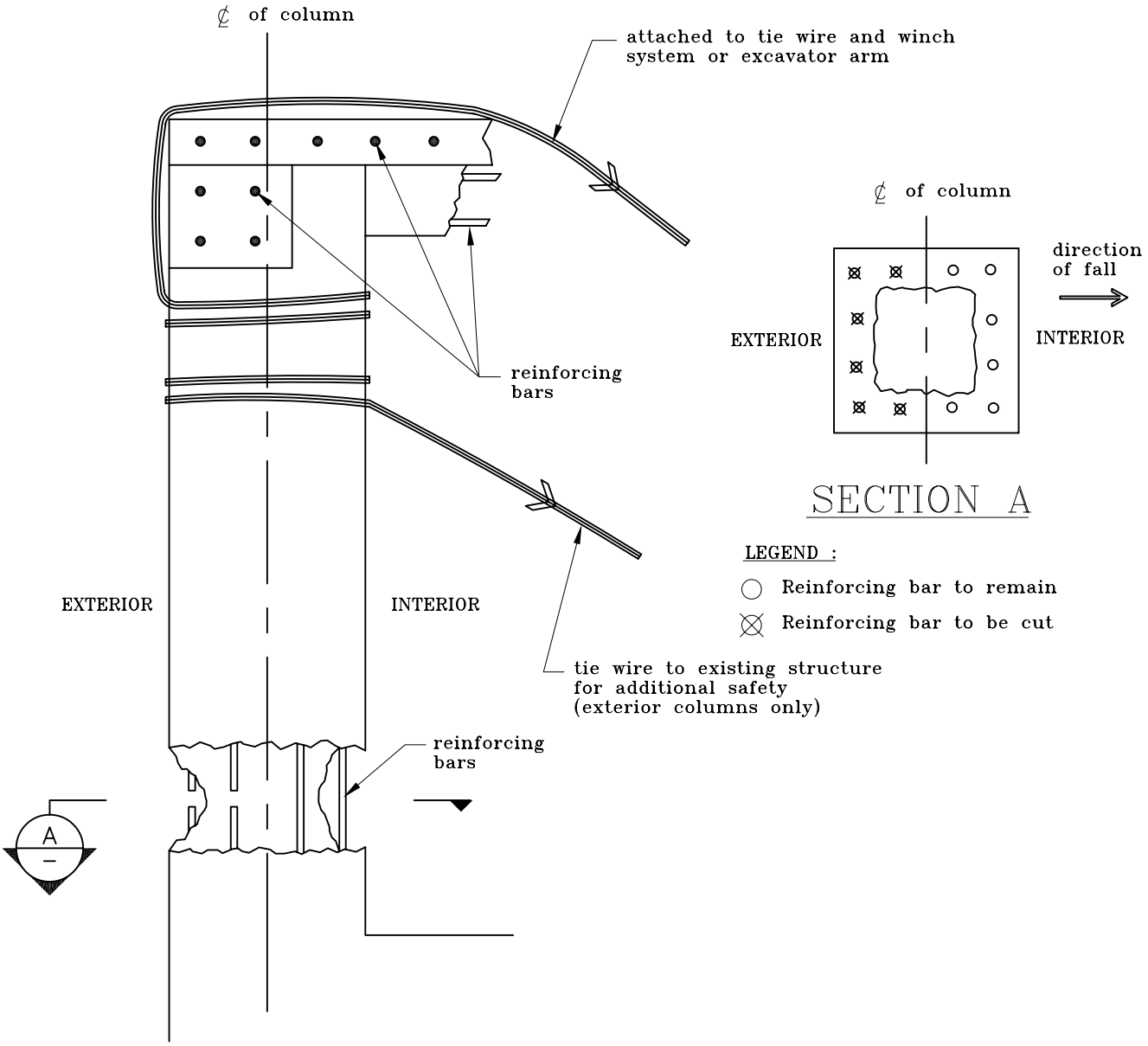

NOTES :

1. Secure the column by wire & winch to existing structure or excavator arm.
2. Pre–weakening at the bottom of column
   i) Break away the concrete to expose the reinforcing bars.
   ii) cut the reinforcing bars at the exterior half of the column. Cutting shall be performed immediately prior to pulling.
3. Pulling down the column in a controlled motion.

FIGURE 4.5 PRE–WEAKENING AND DISMANTLING OF COLUMN (MANUAL METHOD)

(D) Exterior Reinforced Concrete Frame

The exterior reinforced concrete frame may be demolished in sections. The demolition procedures are generally described in the following:

(1) For manual demolition, the optimum section of the frame to be demolished shall be a bay between the two adjacent columns but shall not be wider than 3 m;

(2) The frame section shall be secured to other structural members with wire and winch before disconnecting the framing from the remaining structure;

(3) Pre-weakening shall be performed at the bottom of the two columns. The pre-weakening of the columns shall follow 4.2.4(C); and

(4) The reinforcing bars connecting the beams shall be cut off after pre-weakening. The framing shall be pulled down by exerting force through winch and pulley system.

(E) Reinforced Concrete Wall

(1) Load Bearing Wall

Reinforced concrete walls may be demolished by cutting down the wall into manageable sections. The width of the wall shall not be wider than 2 m. Demolition of the reinforced concrete wall sections is illustrated in Figure 4.6 and described in the following:

(a) Before demolition begins, wire and winch systems shall be used to secure the wall section;

(b) Pre-weakening at the bottom of the wall shall be performed, particularly if the wall section contains columns. The concrete along the cut line of the interior face of the wall section shall be broken away by hand held tools. Pre-weakening shall follow the similar details as for columns given in 4.2.4(C). The operation must be careful to minimise debris from falling out from the building; and

(c) After the concrete along the cut line is removed, the reinforcing bars along the vertical cut line shall be separated. Force shall be exerted through the wire and winch systems to pull the wall down into the building.

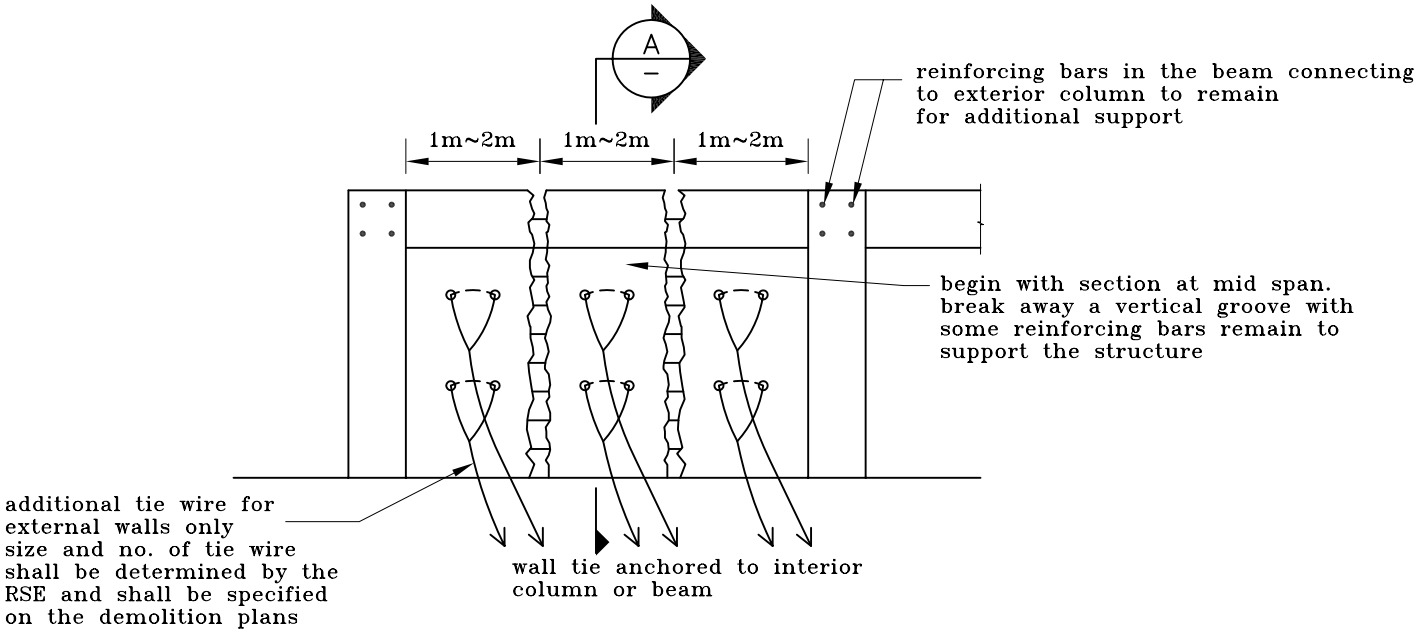

EXTERNAL R.C. WALL (VIEW FROM INSIDE)

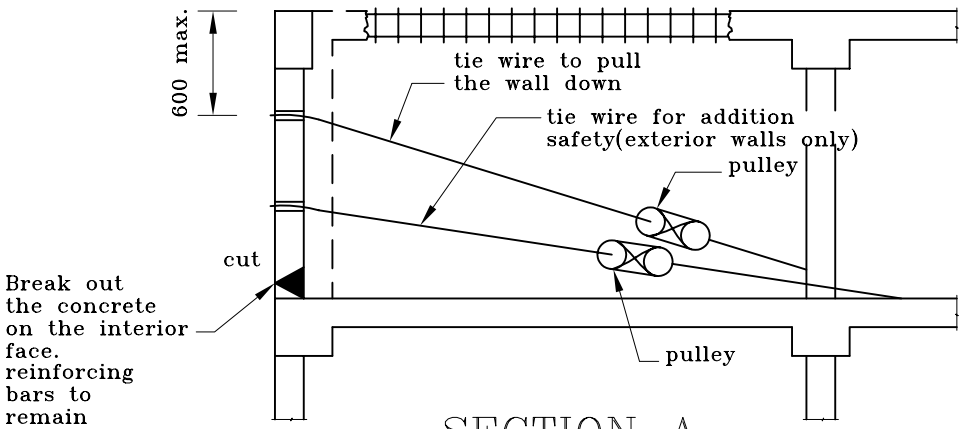

SECTION A

prior to pulling

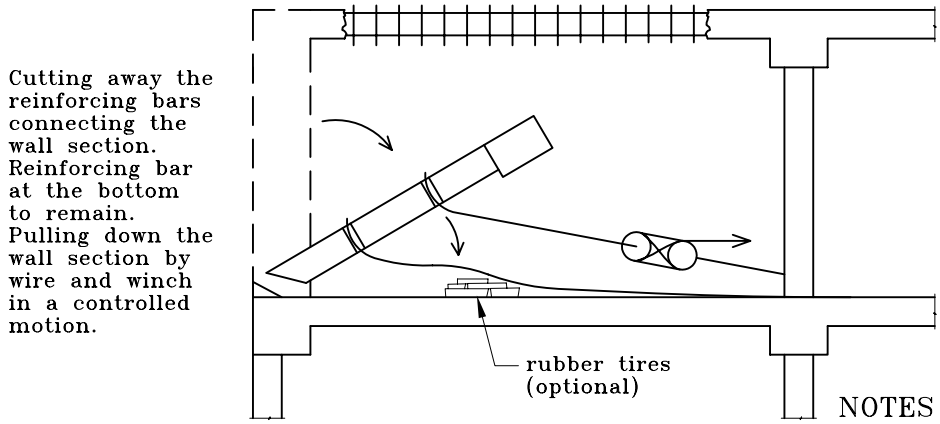

SECTION A

NOTES :
This method may apply to both hand-felling of interior and external walls.

FIGURE 4.6 FELLING OF A REINFORCED CONCRETE WALL (MANUAL METHOD)

(2) Non-Load Bearing Wall

For non-load bearing walls or walls with heavy cross beams, the dismantling procedures are similar to that of the load bearing wall except that the cross beams are dismantled separately from the building walls. Figure 4.7 illustrates the felling of non-load bearing wall sections separately from the cross beam.

4.2.5 Floor Slabs

Reinforced concrete floor slab shall be demolished by gradually breaking away the concrete. The reinforcement shall remain and be cut off after the concrete is broken away. The sequence for demolition of typical floor slabs are discussed in the following:

(A) Two Way Slab

The two way slab is supported by beams or structural members on all four sides. Demolition of the slab shall begin in the middle of the slab and advance towards the sides in all 4 directions. Figure 4.8 illustrates the demolition of two way slab.

(B) One Way Slab

The breaking of concrete shall begin at the unsupported end and proceed in strips perpendicular to the supporting beam or structural member. The strips shall be demolished from their centre towards the supports in both directions.

(C) Flat Slab

Demolition of flat slab shall begin at the centre of the bay between the supporting columns and proceed outwards to the columns and/or members that provide lateral support of the slab. Care must be exercised not to prematurely weaken the shear capacity of the columns or other supports. In general, when demolishing a column strip or part of it, adequate supports shall be provided to the strip in advance.

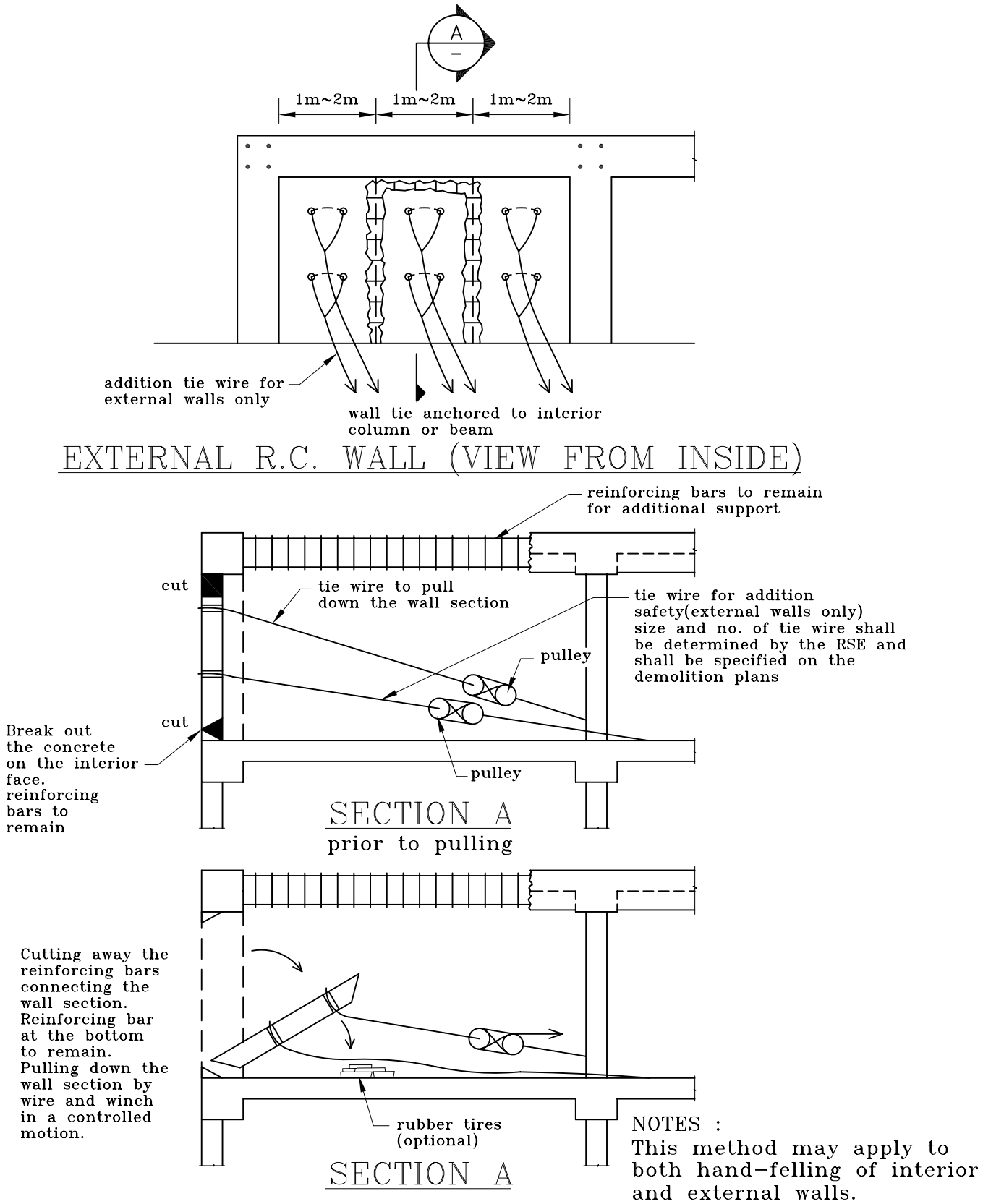

FIGURE 4.7 FELLING OF REINFORCED CONCRETE WALL SEPARATELY FROM THE CROSS BEAM (MANUAL METHOD)

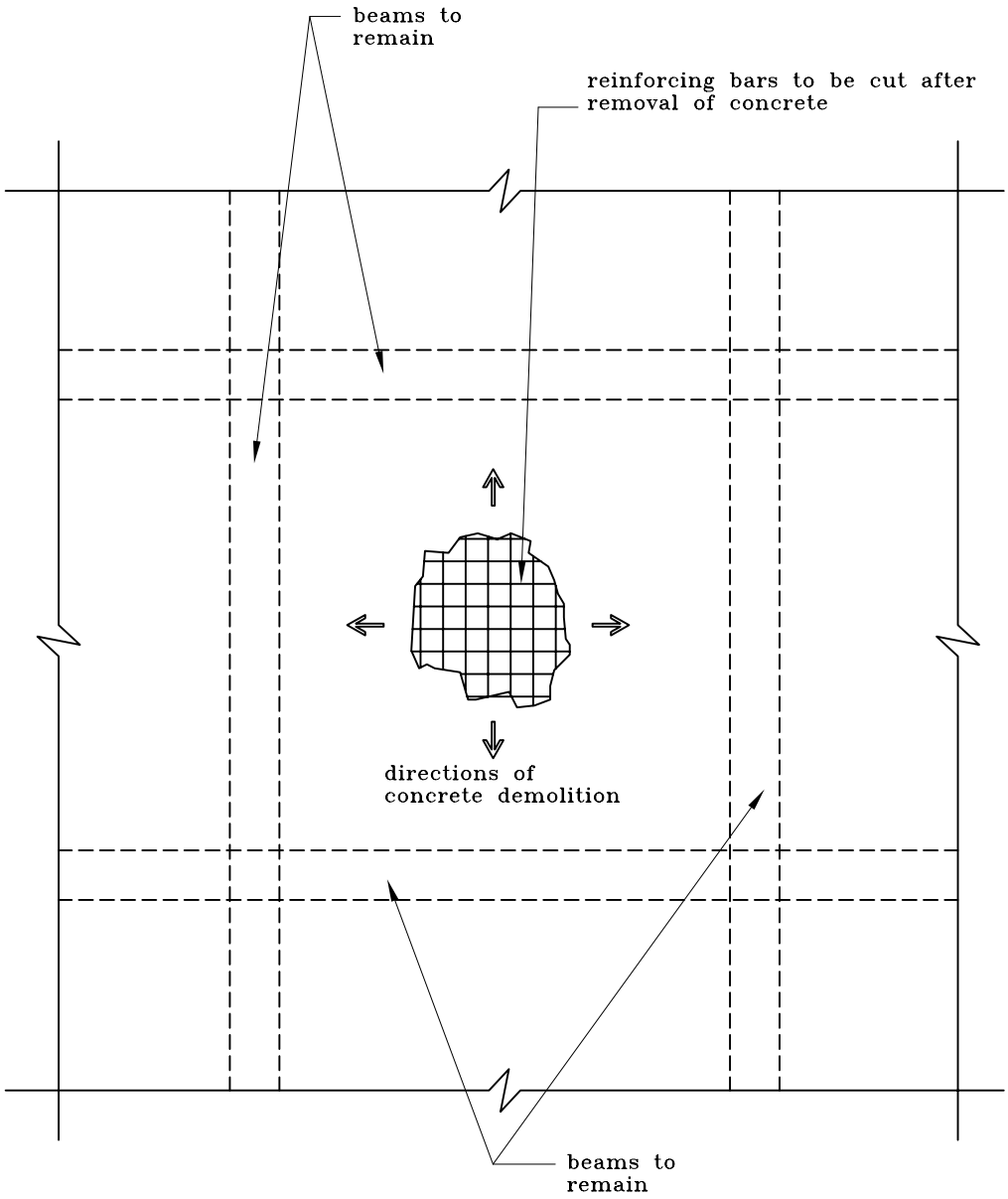

PLAN

FIGURE 4.8 DEMOLITION OF TWO WAY SLAB (MANUAL METHOD)

4.2.6 Interior Beams

(A) Interior beam normally supports floor slabs on both sides. The supporting beam shall not be removed until all other dead loads imposed on the beam are removed, including the slabs supported by the beam; and

(B) The dismantling of interior or secondary beams is illustrated in Figures 4.9 & 4.10.

4.2.7 Interior Columns

Interior column may be dismantled by pre-weakening at their base and pulling down by wire and winch system. The process is similar to the demolition of the exterior column as previously described in 4.2.4(C).

4.3 Top Down — By Machines

4.3.1 General

The sequence of demolition by machine is typically the same as the top down manual method, except that most of the demolition is done by mechanical plant. The demolition begins with the lifting of the mechanical plant on to the building top floor. When rope or tie wire is used for pulling, the workers shall be protected or stay away from the area within reach of the rope or tie wire. The wire strength shall be at least 4 times the anticipated load. The rope or tie wire shall be checked at least twice per day to ensure that they are in good working conditions.

(A) Supports for Machines

The loading to be imposed on the floors by the mechanical plant shall be checked. If needed, propping shall be installed at floor levels below the working floor to safely support the operation of the mechanical plant. The movement of the mechanical plant shall only be within the propped area. The movement of the mechanical plant shall be prohibited in the following areas:

(1) within 2 m of the building edge;

(2) within 1 m of any floor openings; or

(3) any cantilevered structures.

Markings such as ribbons, paints or other appropriate means shall be used to identify the propped area and limits of the mechanical plant movement. The extent of the propping shall be determined based on the anticipated operation, the allowable loading on the floor slabs and the site conditions. Design criteria for the propping requirements are referred to in 3.5.5.

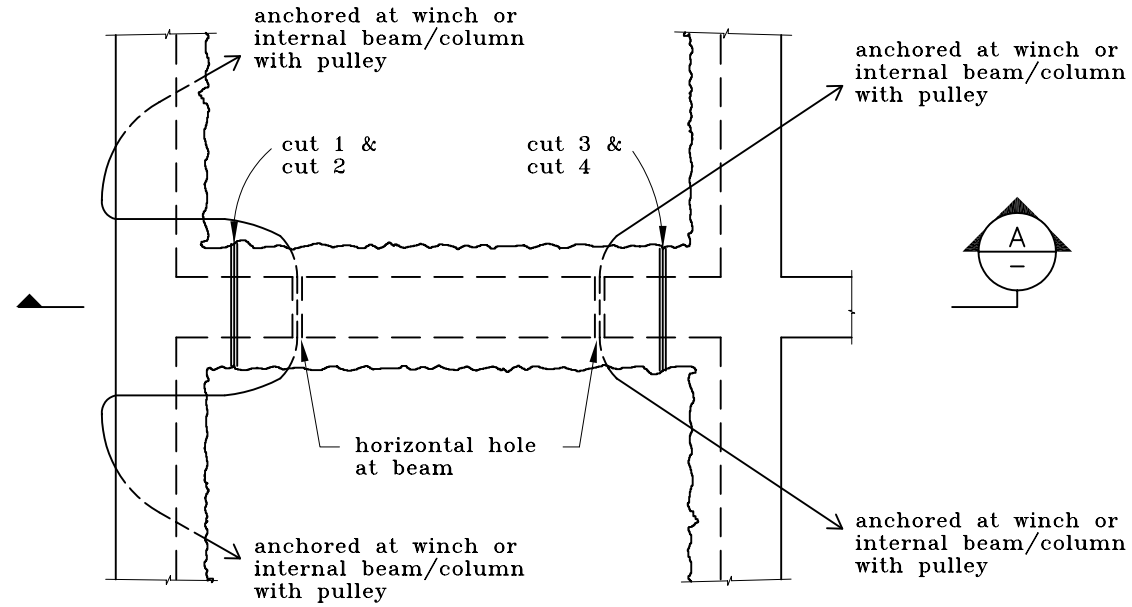

PLAN

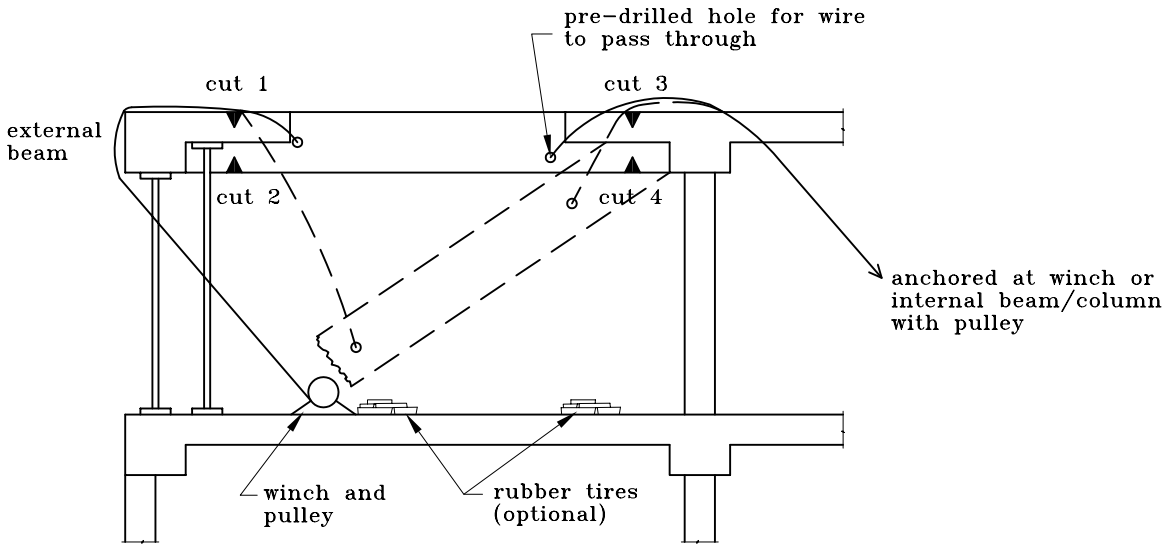

SECTION A

1. Ensure no load on the beam.
2. Tie the beam to be demolished.
   (details of the connection may refer to figure 4.10)
3. Expose reinforcement at both ends of the beam.
4. Cut reinforcement at positions cut 1, cut 2, and cut 3.
5. Lower the beam at external end.
6. Cut reinforcement at cut 4 and lower the beam completely.

Note : The tie wires are indicative. If there are permanent anchors or lifting machines available, tie wire arrangements may be simplified to suit.

FIGURE 4.9 DEMOLITION OF SECONDARY BEAM (MANUAL METHOD)

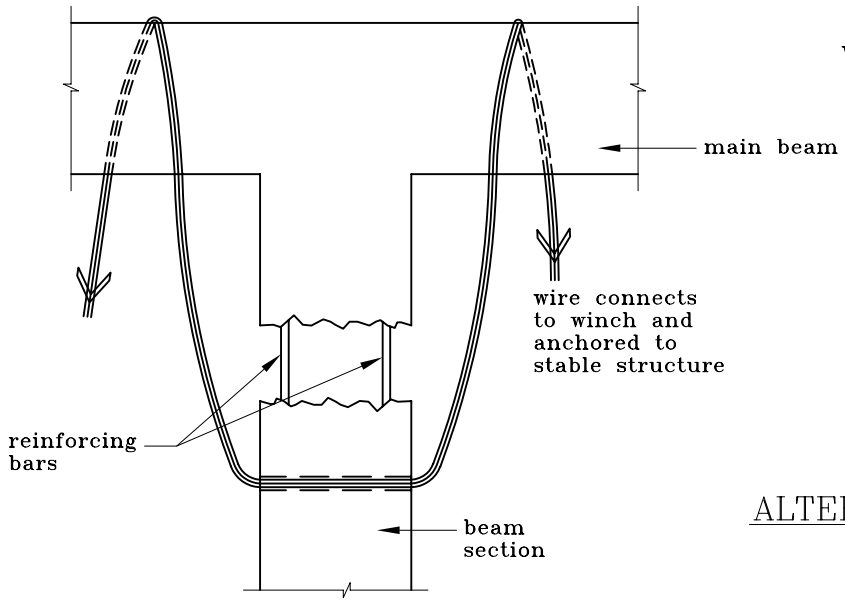

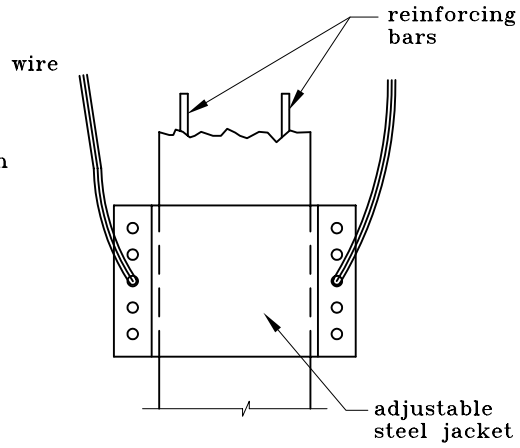

ALTERNATE CONNECTION TO BEAM

PLAN

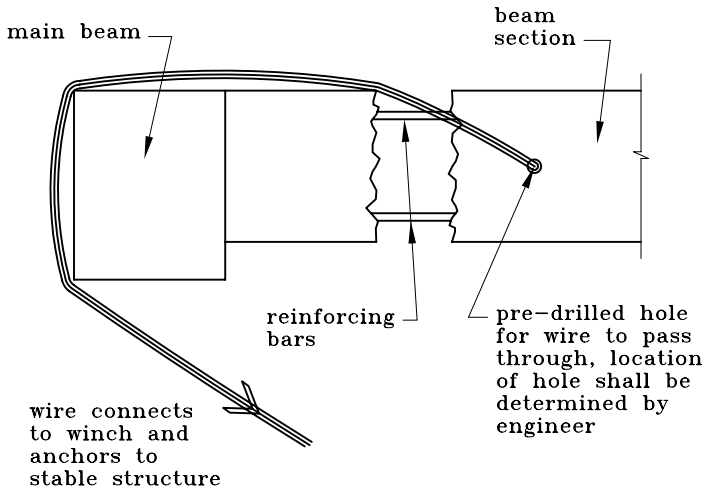

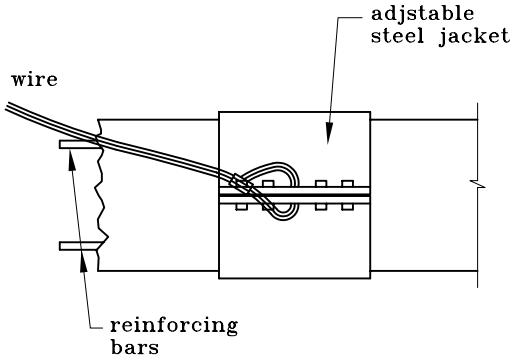

ALTERNATE CONNECTION TO BEAM

ELEVATION

Note :
The wire arrangement is for illustration purpose. It may be simplified to suit depending on the availability of structural anchor.

FIGURE 4.10 DETAILS FOR SECURING SECONDARY BEAMS BEFORE DISMANTLING (MANUAL METHOD)

(B) Lifting of Machinery

The mechanical plant shall be lifted onto the roof of the building by the use of mobile crane or other appropriate means as approved by the Registered Structural Engineer. Prior to the lifting operation, propping shall be installed on the floors beneath the roof in accordance with the approved design. The crane shall be properly tested, examined and operated in accordance with the Factories and Industrial Undertakings (Lifting Appliances and Lifting Gear) Regulations. The operating area shall be blocked off during the lifting operation. Approval from the Hong Kong Police Force and the Transport Department shall be obtained prior to the operation if temporary road closure is required.

(C) Temporary Ramp Construction

The machine shall descend down to the next floor by means of a ramp. The ramp may be a temporary structure or other appropriate design. The slope of the ramp shall be no steeper that 1.75 to 1 or as recommended by the machine manufacturer. Temporary structure shall be designed and constructed in accordance with 3.5. Propping requirements for the temporary access ramp are referred to in 3.5.5.

As an alternative, the machine may also be lowered to the next floor by the use of mobile crane or other appropriate means as proposed by the Registered Structural Engineer. Similar precautionary means and procedures shall be followed as in 4.3.1.(B) above.

4.3.2 Demolition Sequence

Demolition sequence shall be determined according to the actual site conditions, restraints, original building layout and its construction. In general, the following sequence shall apply:

(A) prior to demolition of internal floors, all cantilevered slabs and beams, canopies, and verandahs shall first be demolished;

(B) the structural elements, in general, shall be demolished in the following sequence:

- slab;
- secondary beams; then
- main beams.

(C) mechanical plant shall descend from the floors with temporary access ramp, or be lowered to the next floor by lifting machinery or by other appropriate means;

(D) when a mechanical plant has just descended from the floor above, the slabs and beams, in two consecutive floors may be demolished by the mechanical plant simultaneously. The mechanical plant may work on structural elements on the same floor and breaking up the slabs on the floor above;

(E) the wall panel, including beams and columns shall be demolished by gradually breaking down the concrete or by pulling them down in a controlled manner;

Figure 4.11 illustrates the typical sequence of top down method with mechanical equipment.

4.3.3 Cantilevered Canopies and Balconies

Demolition of cantilevered canopies and balconies may critically affect public safety and must be performed with extreme caution. Temporary supporting structures, catch platform and/or temporary platforms shall be placed directly underneath the cantilevered canopies or balconies. Common problems related to cantilevered structure are discussed in 5.3. The process of demolition of the cantilevered structures is described in the following:

(A) The exterior wall linking the cantilevered structure or balcony shall be removed first. This is further discussed in 4.3.4: Exterior Walls, Beams and Columns;

(B) The floor slab and cantilevered beam may be demolished in sections. Demolition of cantilevered slab is illustrated in Figure 4.12;

(C) The machine arm with wire passing through the slab section shall be used to stabilise the structure while the cutting is performed;

(D) Cuttings may be performed by jack hammer or pneumatic hammer for the concrete and oxy-acetylene flame cutter for the reinforcements. The concrete shall be broken away first before the cutting of reinforcement. Alternatively the reinforced concrete slab may be cut by saw cutting; and

(E) The slab shall be lifted into the building by a derrick arm.

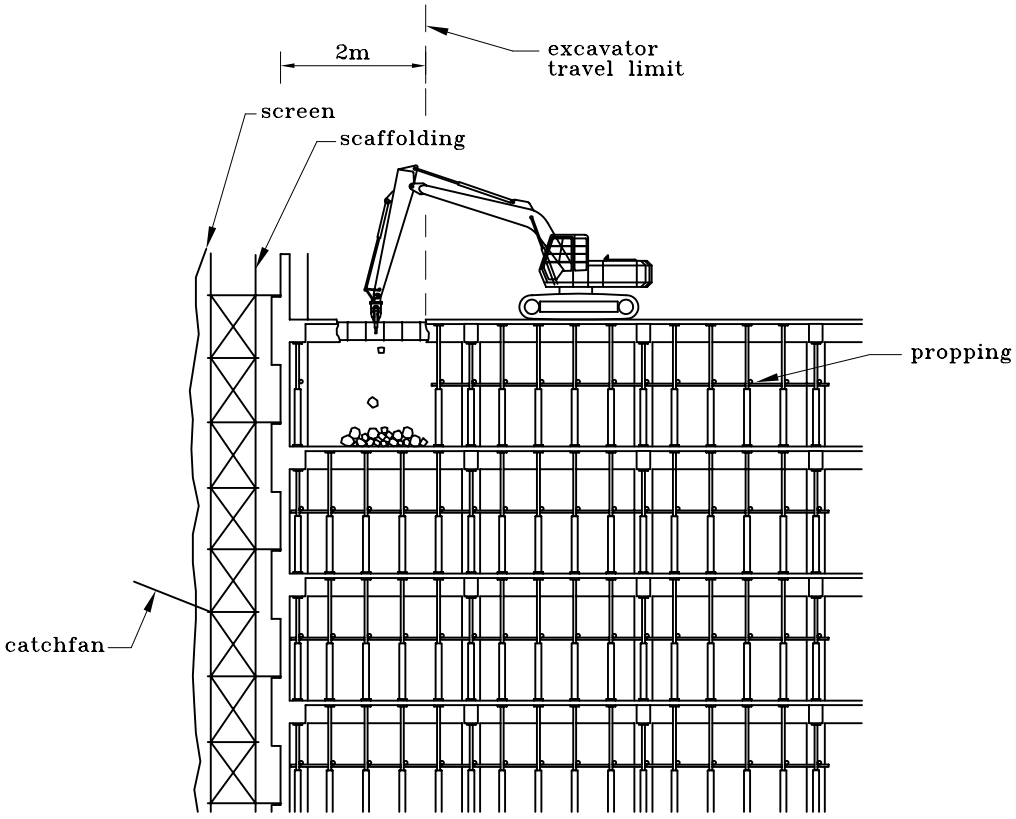

1. Demolition of Slabs and Beams

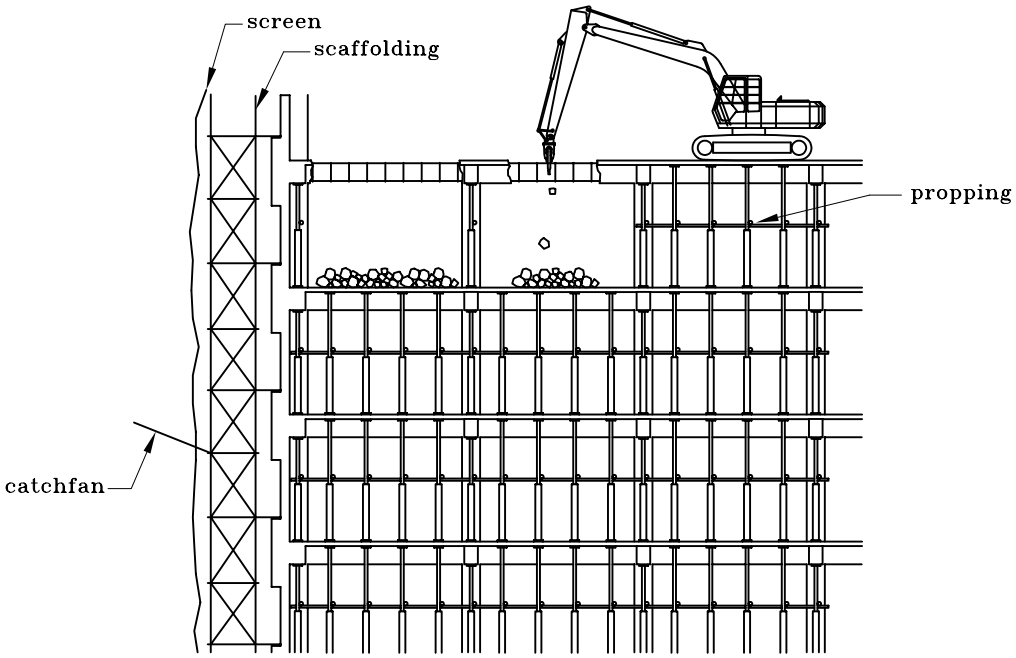

2. Continue Demolition of Slabs and Beams

FIGURE 4.11 TYPICAL SEQUENCE OF TOP DOWN METHOD WITH MECHANICAL EQUIPMENT (SHEET 1 of 3)

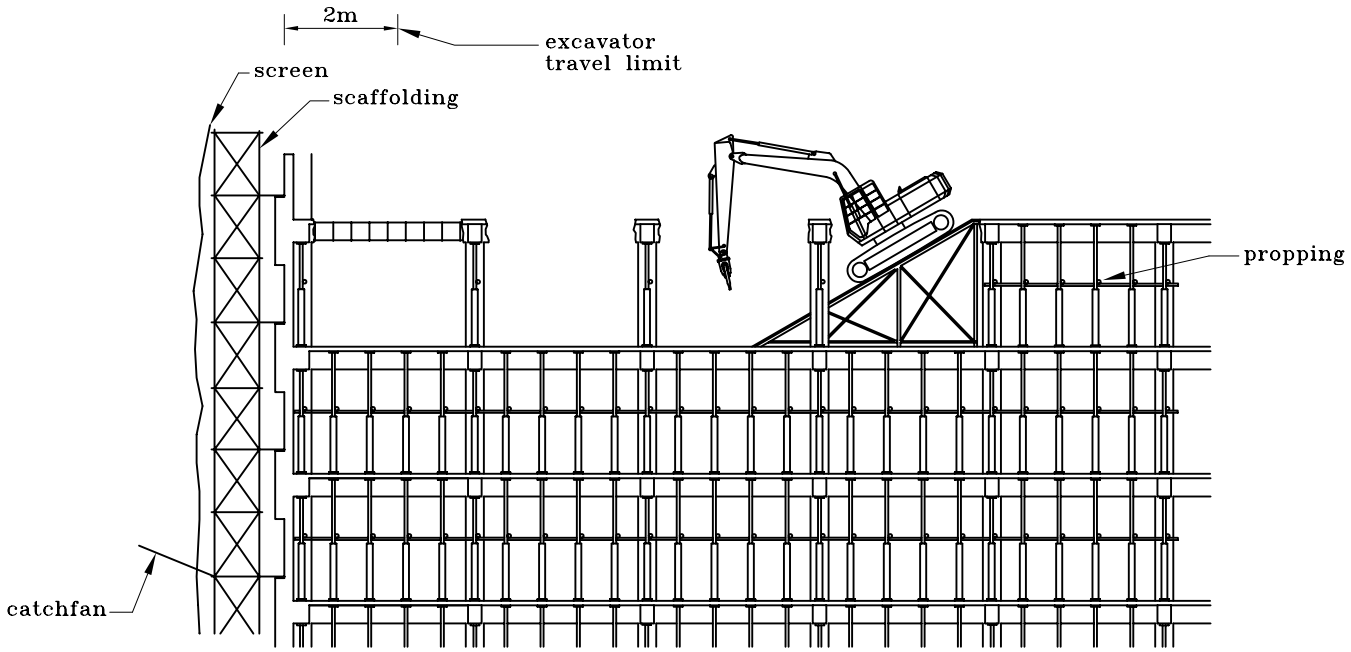

3. An access ramp of steel structural frame to allow machine to climb down to the next floor below.

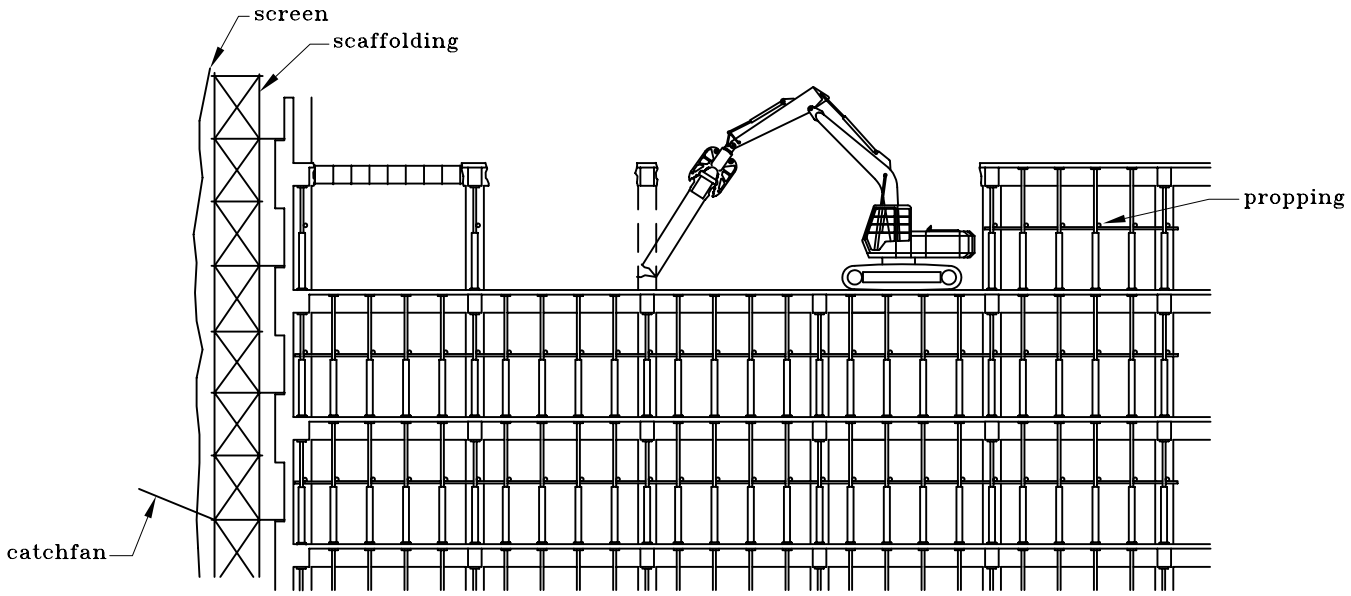

4. Demolition of interior column may be needed to create access and working room for exterior wall demolition. Demolish column by first pre-weakening the bottom, then dismantled by machine in fully controlled motion.

FIGURE 4.11 TYPICAL SEQUENCE OF TOP DOWN METHOD WITH MECHANICAL EQUIPMENT (SHEET 2 of 3)

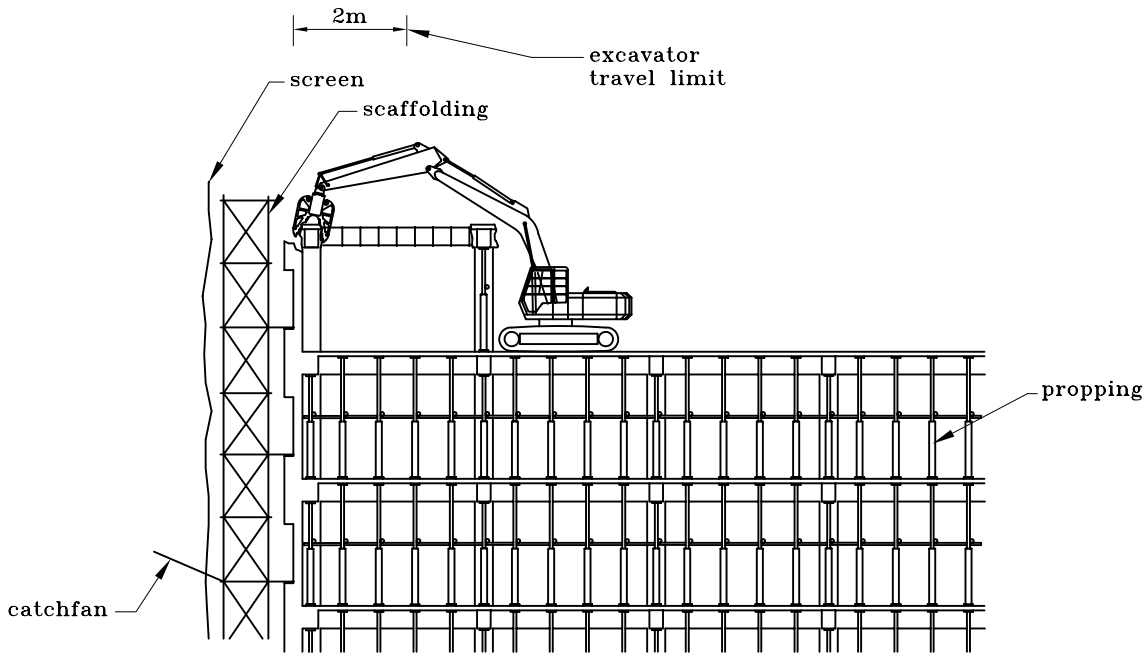

5. Cutting the exterior wall in sections and pre-weakening of columns.(see figure 4.14) Cutting should be careful to minimise debris falling outside.

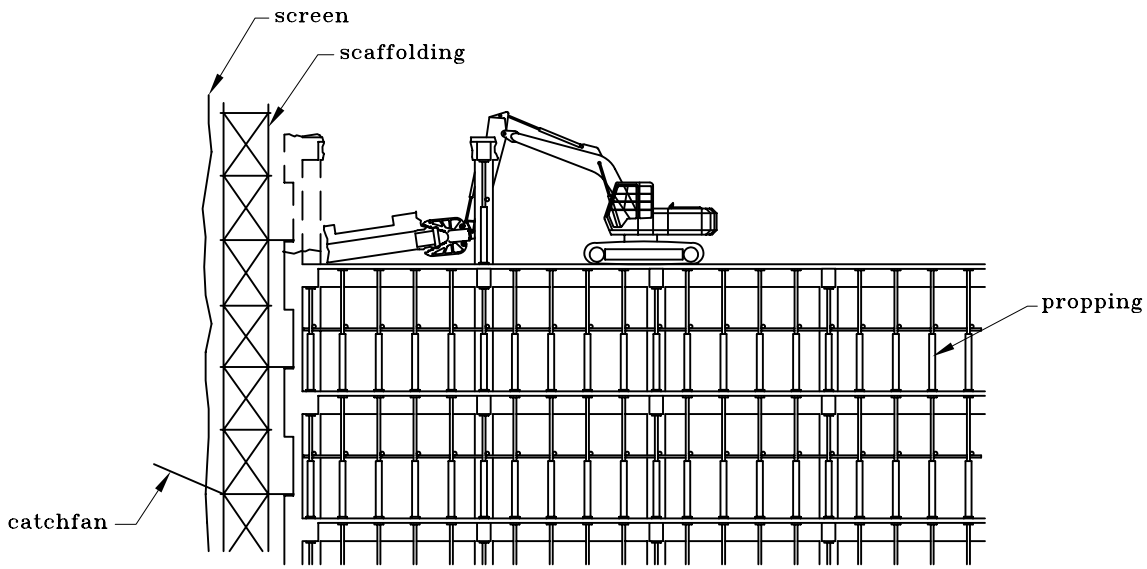

6. Machine should be used to brace the wall section while cutting the reinforcing bars connecting the wall section.
The wall section shall be pulled down in a controlled motion.

FIGURE 4.11 TYPICAL SEQUENCE OF TOP DOWN METHOD WITH MECHANICAL EQUIPMENT (SHEET 3 of 3)

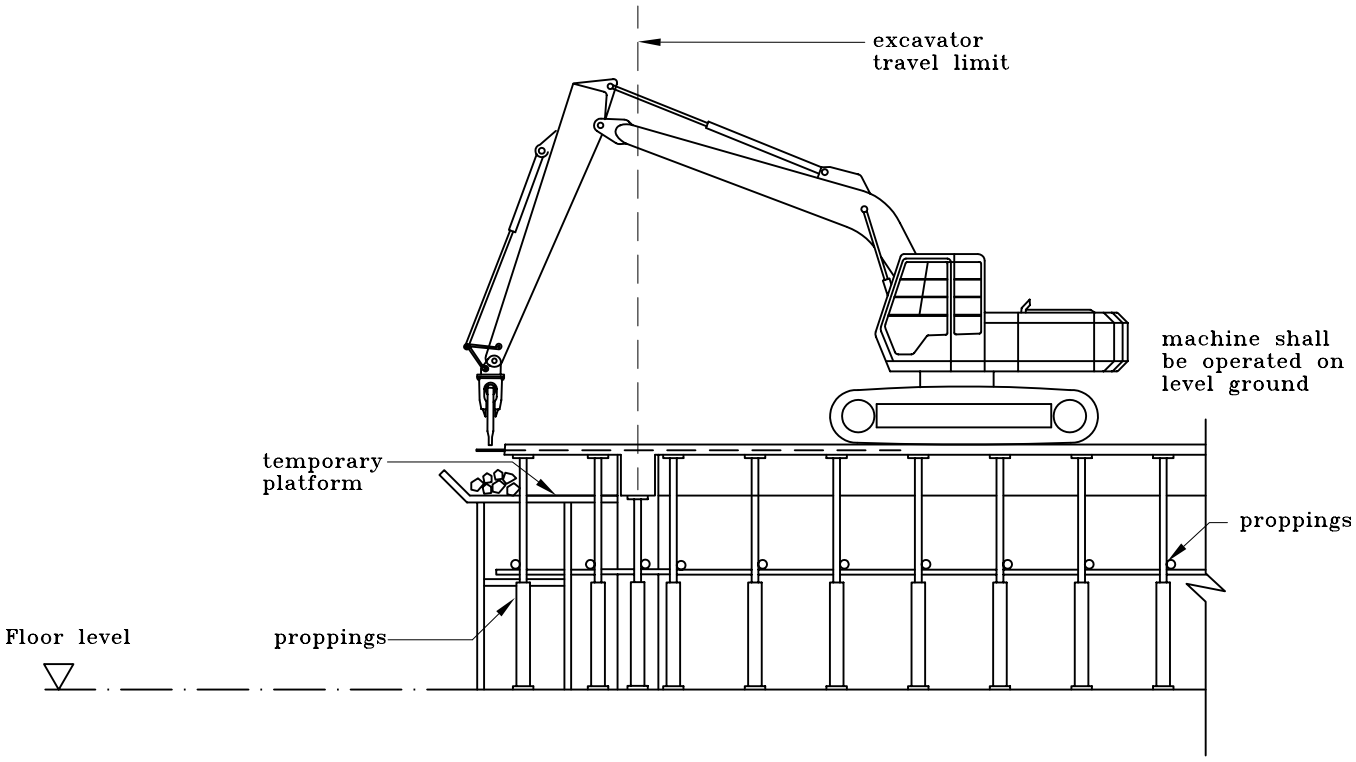

CASE 1. MACHINE MOUNTED ON SUSPENDED FLOOR

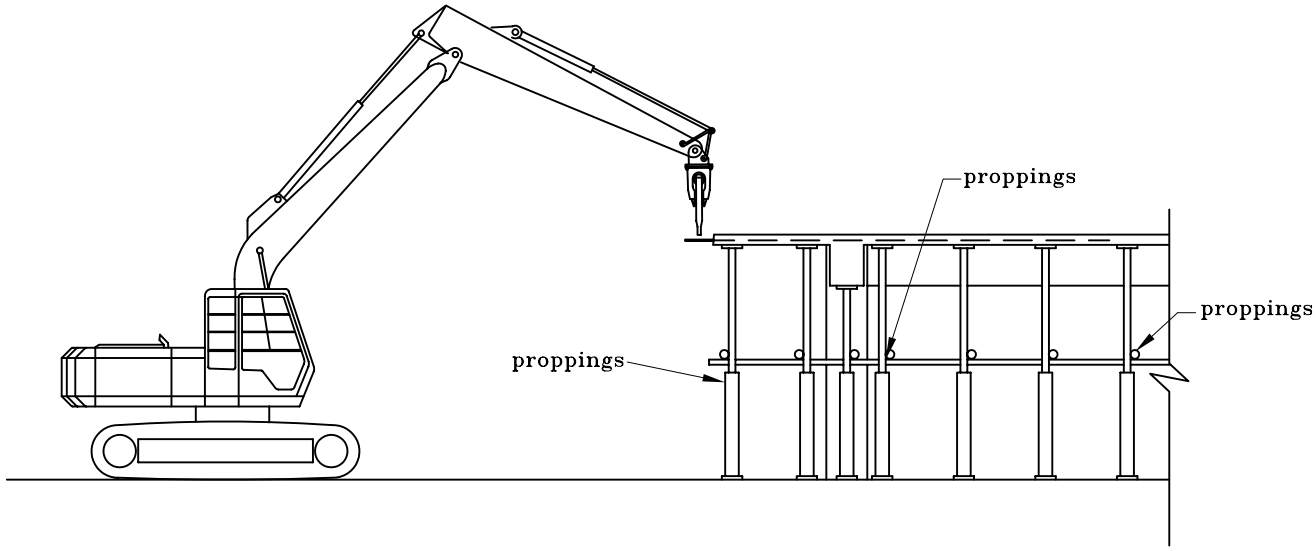

CASE 2. MACHINE MOUNTED ON GROUND

FIGURE 4.12 DEMOLITION OF CANTILEVERED SLAB BY MOBILE MACHINE (CONVENTIONAL METHOD)(SHEET 1 OF 2)

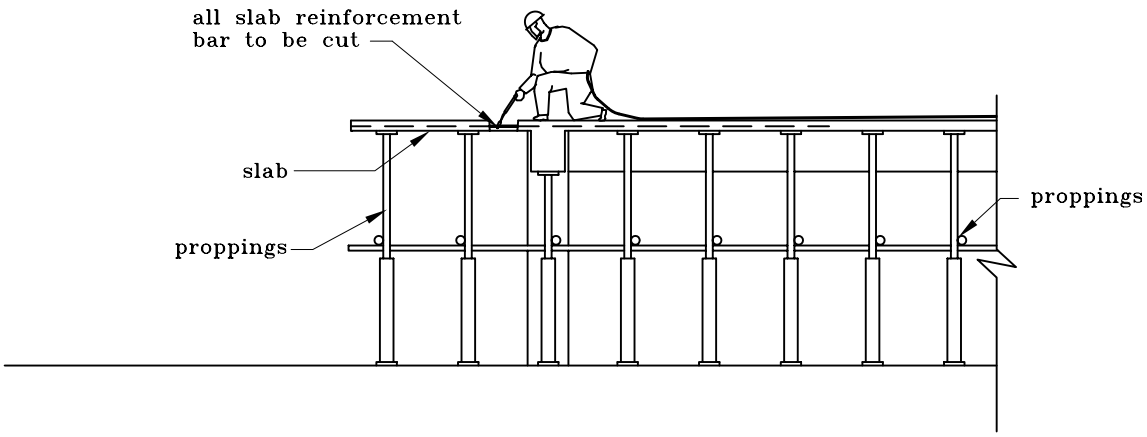

A. CUTTING OF CANTILEVERED SLAB

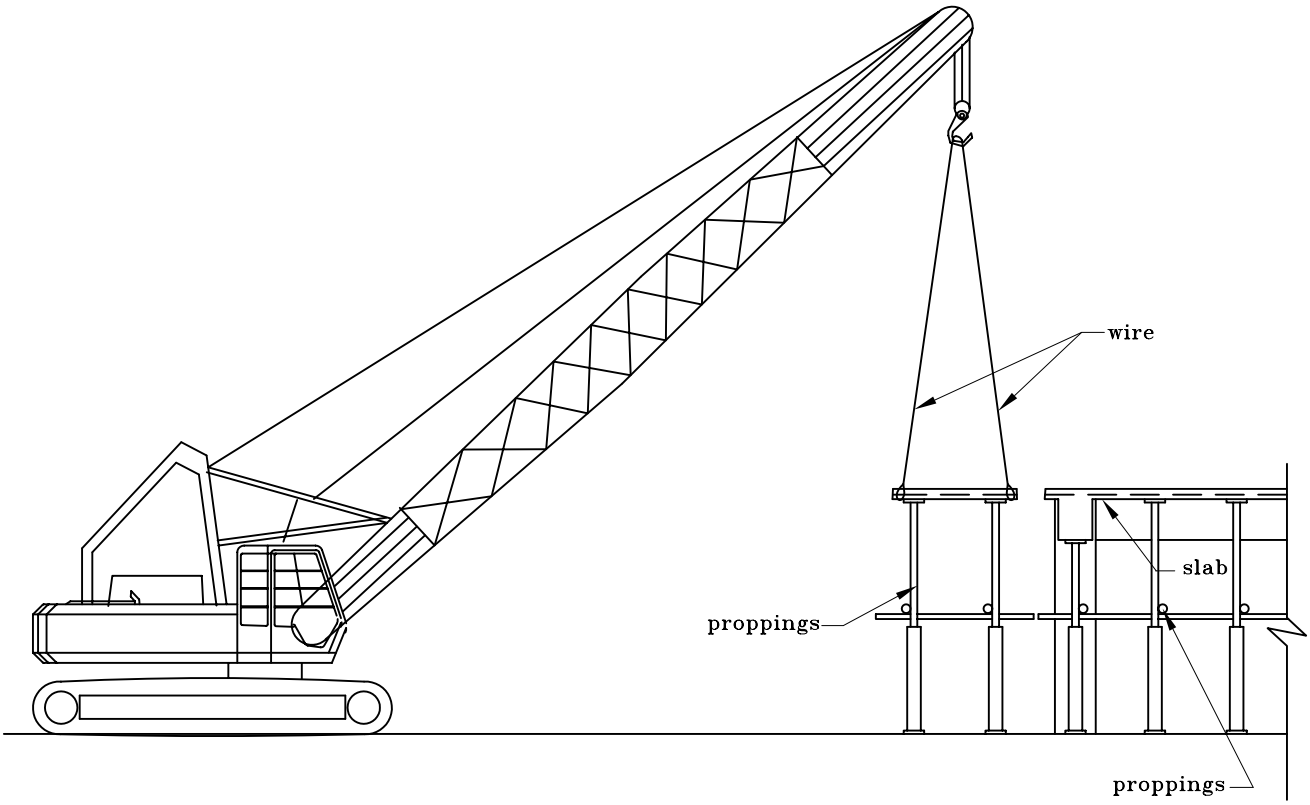

B. LIFTING OF CANTILEVERED SLAB

FIGURE 4.12 DEMOLITION OF CANTILEVERED SLAB BY MOBILE MACHINE (CUT AND LIFT METHOD)(SHEET 2 OF 2)

4.3.4 Exterior Walls, Beams and Columns

Demolition of exterior wall shall be proceeded with extreme caution. The exterior wall may be demolished in sections by mechanical plant. The width of wall section shall be determined by the RSE. The mechanical plant shall have adequate working capacity to safely handle the weight of the wall sections. A short span of the slab, about 300 mm, attached to the external beam at the top of the wall, may be left in order to keep the loading resultant of the exterior wall further into the building.

(A) Brick in-fill wall

Demolition of the brick-in-fill wall is generally described in the following:

(1) The in-fill bricks shall first be manually removed. The brick shall be removed from the top layer down by pushing in from outside. Work platforms erected outside the building may be used for this operation; and

(2) After the in-fill bricks are removed, the reinforced concrete frame may be demolished by dismantling the framing sections as described in 4.3.4(C).

(B) Exterior Column

(1) The excavator arm with wire or hydraulic crusher attachment shall be used to brace the column;

(2) Pre-weakening shall be performed at the bottom of the columns, similar to the process described in 4.2.4(C);

(3) After pre-weakening, the column shall be pulled down in a controlled motion into the building by the excavator arm; then

(4) Demolition inside the building by the excavator arm.

(C) Exterior Reinforced Concrete Frame

Dismantling of the exterior reinforced concrete frame, is illustrated in Figure 4.13 and is described in the following:

(1) The concrete along the proposed cut-line shall be broken first. The reinforcing bars shall be kept to stabilise the structure. The excavator arm shall secure the reinforced concrete framing;

(2) Pre-weakening may be performed at the bottom of the columns as described in Figure 4.5. The excavator arm shall continue to stabilise the frame while cutting the reinforcing steel at the disconnecting points; and

(3) The excavator arm shall pull and guide the frame safely onto the floor.

(D) Reinforced Concrete Wall

The process of demolishing a reinforced concrete wall section is similar to that of a reinforced concrete frame. Demolition of a reinforced concrete wall section is illustrated in Figure 4.14 and is described in the following:

(1) The reinforced concrete wall shall be vertically separated from the remaining wall by breaking away the concrete. The width of the wall section shall be determined by the Registered Structural Engineer. The reinforcing bars shall remain to provide support to the wall section;

(2) If the wall section contains columns, pre-weakening shall be performed at the level where the wall is to be separated. Pre-weakening of column is referred to in 4.2.4(C);

(3) The machine arm shall be used to secure the wall section during the cutting of the reinforcements along both sides of the wall section; and

(4) After the reinforcing bars are severed, the machine arm shall steadily guide and pull down the wall section into the building for further break down.

4.3.5 Floor Slabs

Floor slabs may be dismantled by breaking down the concrete gradually with machine mounted attachments. Reinforcing bars shall be cut afterwards. The sequence for demolishing one way slab, two way slab and flat slab shall be the same as described in 4.2.5. The slab may be demolished by machine with breaker, hydraulic crusher or other appropriate attachments.

4.3.6 Interior Beams

Interior Beam may be demolished by breaking the concrete away gradually and disconnecting the reinforcement afterwards.

4.3.7 Interior Columns

Reinforced concrete column may be demolished by using the same procedures as described for the exterior column in 4.3.4(B).

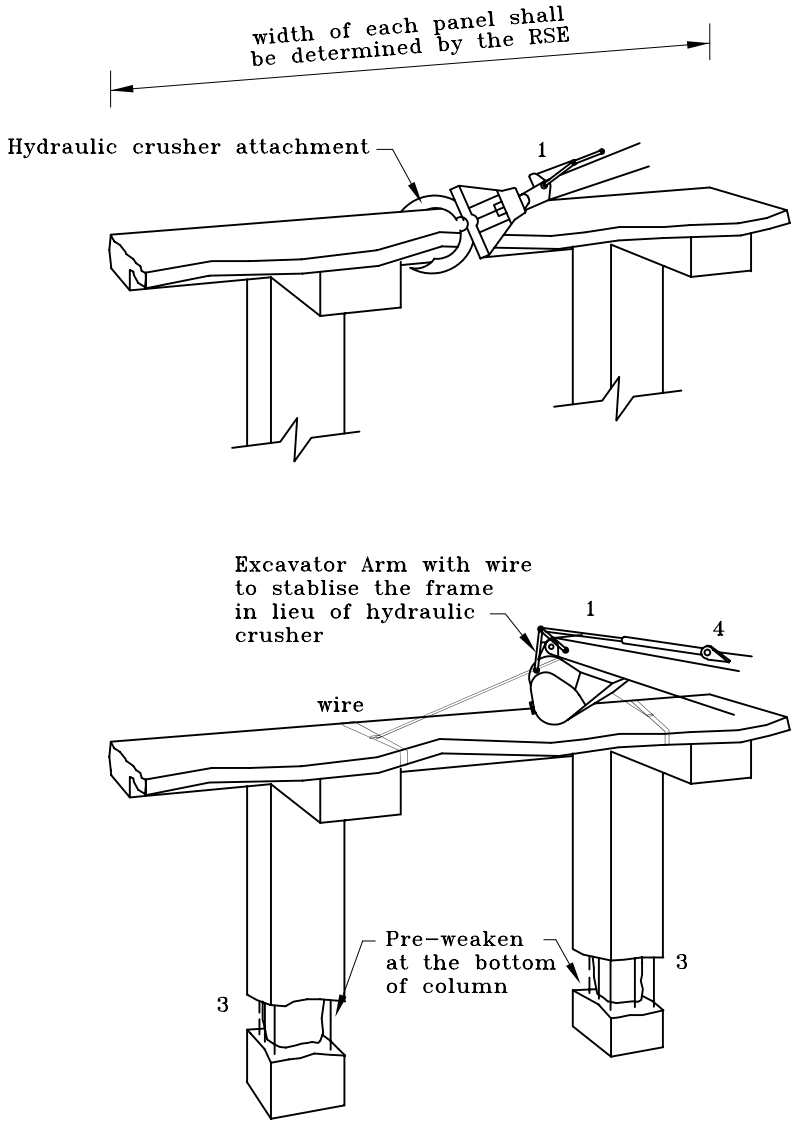

1. Excavator arm with wire or hydraulic crusher attachment secures the R.C. Frame.
2. The width of the frame section shall be determined by the RSE.
3. Pre-weakening of the concrete column at the bottom by breaking out the concrete cover to expose the reinforcing bars. Only the reinforcing bars at the exterior face, where the columns fall away from, shall be cut. (see Figure 4.5)
4. Excavator arm pulls down the frame in a slow and controlled motion.

FIGURE 4.13 DEMOLITION OF REINFORCED CONCRETE FRAME BY EXCAVATOR WITH CABLE

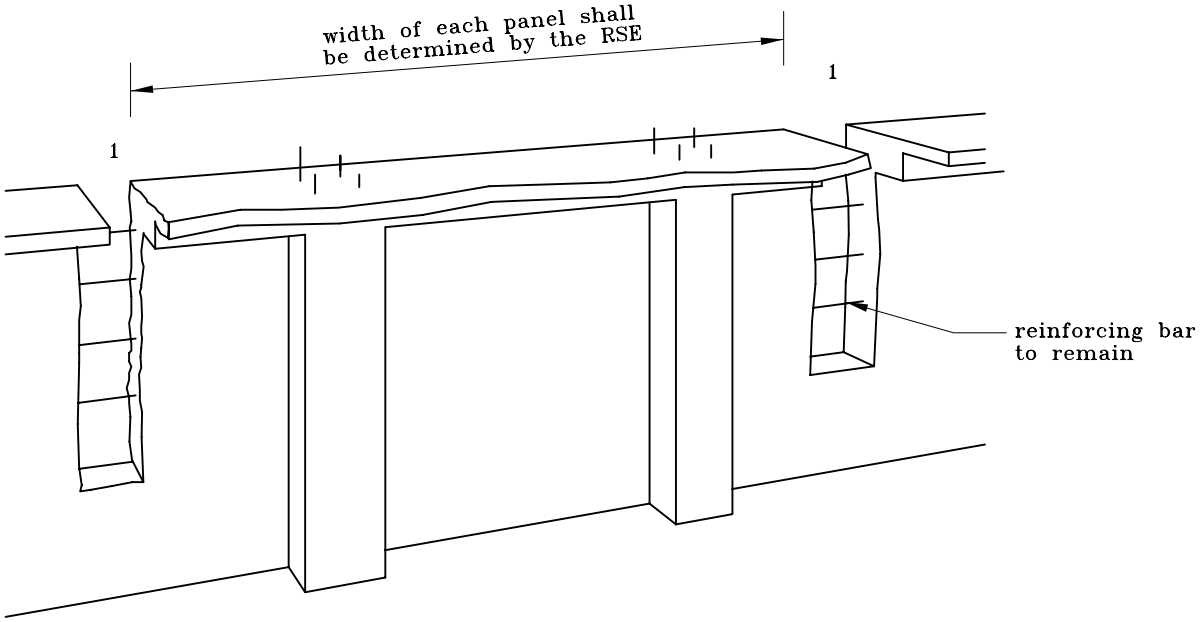

1. Breaking away the concrete along vertical slots to separate the wall section.
   Width of wall section shall be determined by the RSE.
   Reinforcing bars shall be left to stabilise the section.
   Breaking of concrete shall be done cautiously to minimise debris from falling outside the building.

FIGURE 4.14 DEMOLITION OF REINFORCED CONCRETE WALL BY EXCAVATOR (sheet 1 of 3)

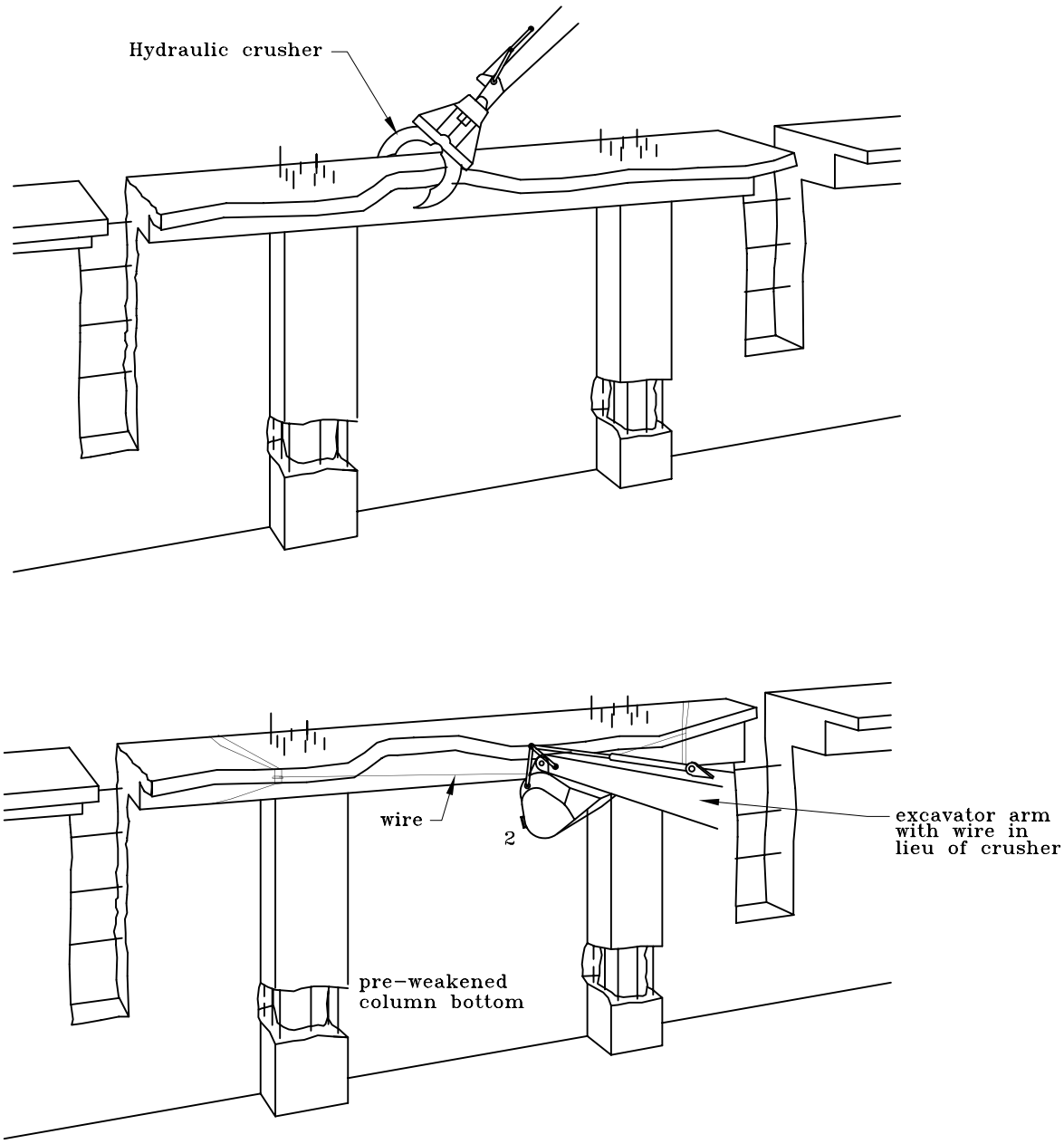

2. Excavator arm with wire to brace the wall section while pre-weakening at the bottom of columns. (see Figure 4.5)

FIGURE 4.14 DEMOLITION OF REINFORCED CONCRETE WALL BY EXCAVATOR (sheet 2 of 3)

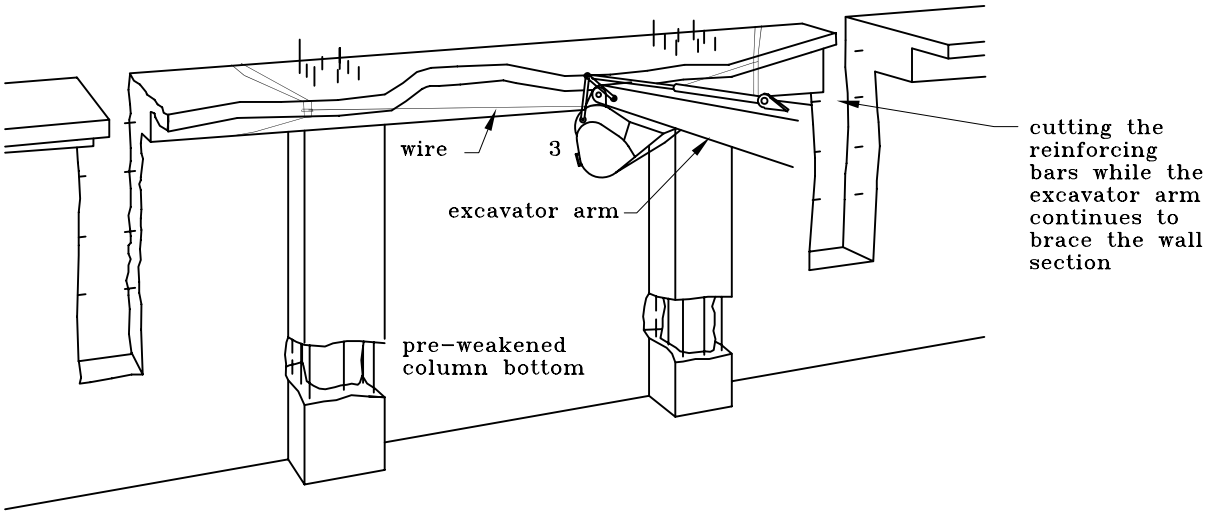

3. Machine continues to brace the wall section, while cutting the reinforcing bars.
   Reinforcing bar at the bottom to remain.
   After cutting off reinforcements, excavator arm pulls the wall down in a controlled motion.

FIGURE 4.14 DEMOLITION OF REINFORCED CONCRETE WALL BY EXCAVATOR (sheet 3 of 3)

4.4 Mechanical Method by Hydraulic Crusher with Long Boom Arm

4.4.1 General

The crusher attachment breaks the concrete and the reinforcement by the hydraulic thrust through the long boom arm system. The hydraulic crusher can be operated from the ground outside the building. This method is also suitable for dangerous buildings, silos and other industrial facilities. Figure 4.15 illustrates the typical operation of hydraulic crusher with long boom arm. For environmental reason, it should be used wherever practicable because of its quietness.

4.4.2 Application Criteria

(A) The operation shall have a minimum clear space of 1/2 the building height as a safety zone for the falling debris;

(B) The equipment shall be inspected and maintained periodically to make sure the equipment is in good and safe condition. The excavator shall operate on firm ground that can support the machine during the crusher operation;

(C) Except for special applications, each section of the structure shall be demolished in a top down sequence to ensure stability of the structure;

(D) Debris may be used to build up a platform for the excavator to extend the range of reach. It is important that the debris is densely compacted to support the operation of the excavator. The platform must be flat and the slope must be stable. The height of the build up platform shall be limited to 3 m. The side slope of the temporary platform shall not be steeper than 1:1 (horizontal to vertical) unless the condition allows a steeper slope. The slope of access ramp for the machine shall be in accordance with the manufacturer's recommendation. The width in both directions of the platform shall be at least one and one-half the length of the machine to allow safe manoeuvre during the demolition operation;

(E) To minimise the dust impact, the structure shall be pre-soaked with water before demolition. Water shall be continuously sprayed during the crushing operation;

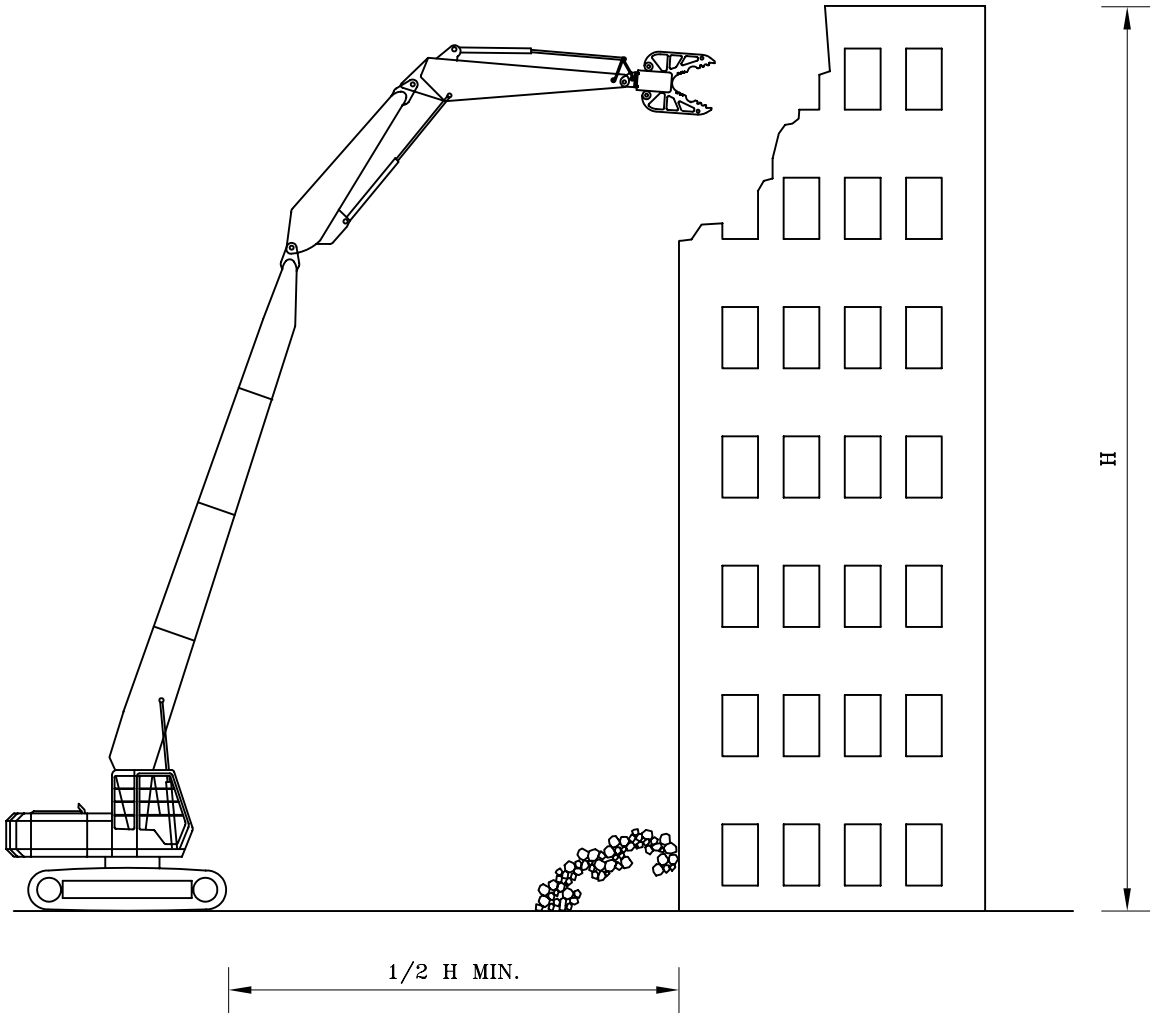

FIGURE 4.15 DEMOLITION BY HYDRAULIC CRUSHER WITH LONG ARM BOOM

(F) Debris may fall out of the building during the demolition. The site shall be completely fenced off. There shall be 24-hour guarded security to allow only authorized personnel for site access. During the operation of the crusher there shall be no worker within the machine operating area or inside the building; and

(G) The crusher operator shall possess the essential skills and significant experience in the crusher operation. There shall be a spot person to assist in the operation and alert the operator of any potential problem during the operation.

4.5 Wrecking Ball

4.5.1 General

The wrecking ball application consists of a crane equipped with a steel ball. The destruction of the building is by the impact energy of the steel ball suspended from the crawler crane. The wrecking ball operates outside the building. This method is suitable for dilapidated buildings, silos and other industrial facilities. However, the operation requires substantial clear space. The application also demands high level skill operators and well-maintained equipment. Figure 4.16 illustrates the operation of Wrecking Ball.

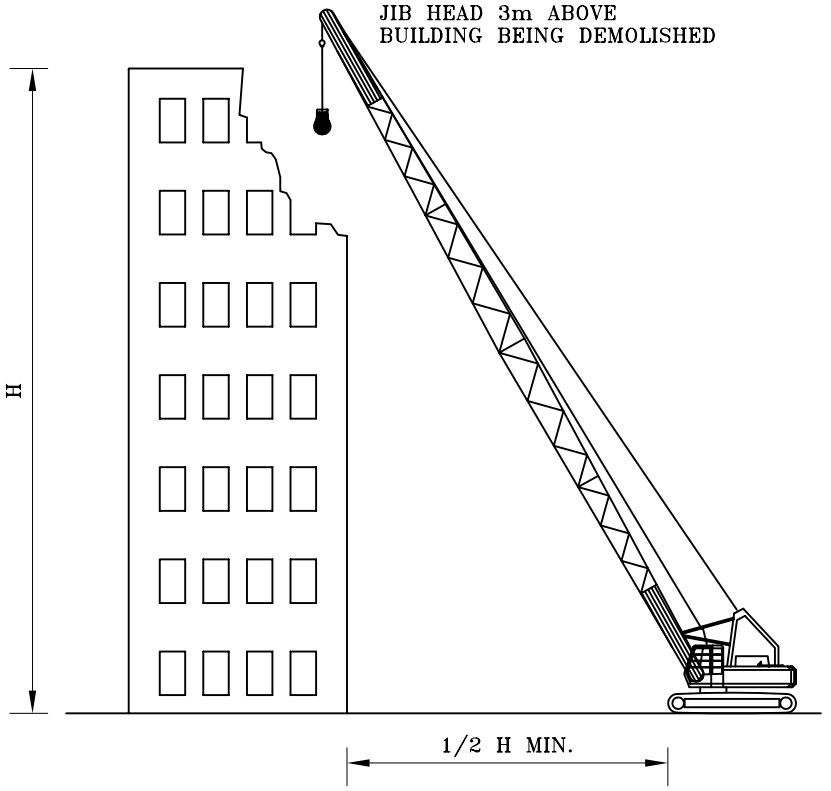

VERTICAL DROP METHOD

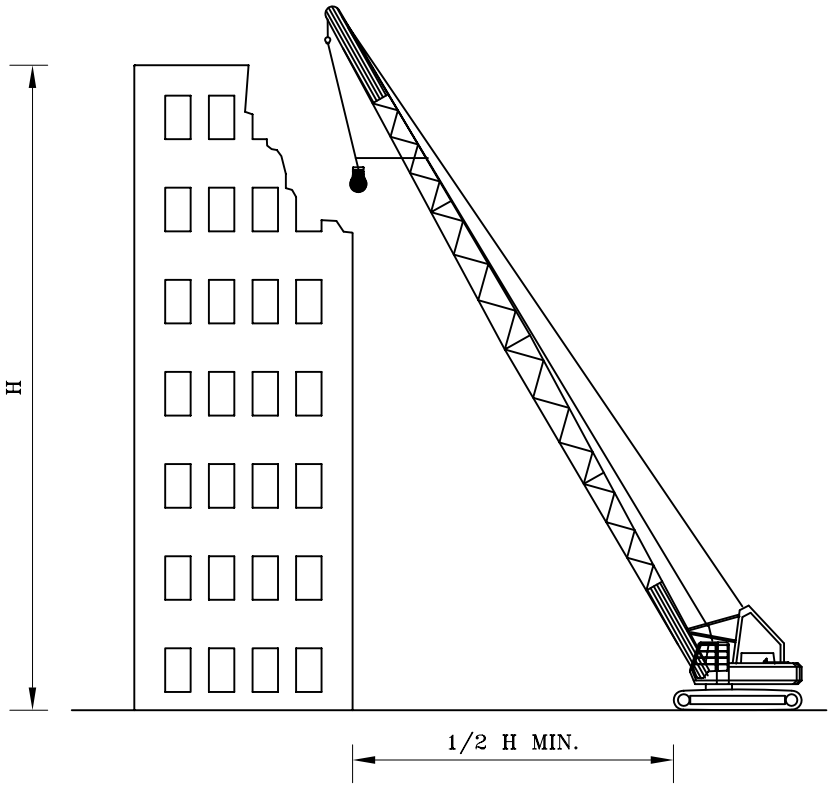

SWING IN-LINE METHOD

FIGURE 4.16 OPERATION OF WRECKING BALL

4.5.2 Application Criteria

The recommended criteria for the use of wrecking ball are presented in the following:

(A) Except for special application, the balling of each section of the structure shall proceed from top to bottom. Care shall be taken to maintain the stability of the structure;

(B) Recommended techniques for the wrecking ball operations include:

(1) Vertical Drop - free falling of the wrecking ball onto the structure;

(2) Swing in line - swinging of the ball in-line with the jib. A second dragline will normally connect to the ball horizontally to control the ball motion. The ball shall be swung into the building. The ball shall strike at the top of the member so as to avoid the member from falling outside the building.

Slewing the jib is not recommended. The motion of the ball by slewing the jib is difficult to control. It demands expert knowledge of the machine and structure as well as operating skills to safely perform the task. Slewing can potentially induce a tremendous amount of stress on the jib, as such, its use shall be avoided;

(C) The jib or boom shall be operated with no less than 3 m above the portion of the structure being demolished;

(D) Clear space for operation between the crane and the structure being demolished shall be 50% of the height of structure, the clear distance between the site boundary and the building to be demolished shall not be less than 50% of the building height plus an additional 6 m for the crane to manoeuvre, this criteria shall apply to all sides of the building to be demolished by wrecking ball;

(E) The demolition ball shall be connected with swivel type anti-spin device to prevent twisting and tangling of the wire during operation;

(F) The wire and boom of the machine used for balling shall have a rated capacity, at the working radius, of at least 5 times the weight of the ball;

(G) The strength of the wire shall be at least twice the tensile strength of the nominal steel reinforcement of the floor slab and beams. The high strength wire allows the pullout of the wrecking ball from potential traps;

(H) To ensure that the crane is in good condition, the wire connecting to the ball, the boom components and connecting pins shall be inspected twice daily;

(I) A sufficient length of the wire shall be provided to allow the ball to drop to the lowest working level plus an addition of 10% of the wire length and no less than 3 drums. For swing in-line method, there shall be sufficient length of the dragline wire to allow the ball to fall in the event that the ball is entangled with the falling debris;

(J) The operation shall not be performed adjacent to overhead power lines;

(K) The site shall be entirely fenced off to forbid public access. A 24-hour security guard shall be assigned to the site to enforce the access restriction; depending on the relative location between the fence and the building, and fence shall be designed to withstand accidental impact by the wrecking ball;

(L) During the use of the demolition ball, except for the crane operator and the spot person, all other workers shall be kept away from the demolition ball's working radius. No body shall stay inside the building;

(M) To minimise the dust impact on the surrounding area, the structure to be demolished shall be pre-soaked with water before demolition. Water spraying shall continue on the structure during demolition;

(N) Since the safety and success of the project depend highly on the operator and site personnel, the operator must have proven experience and skill for operating the wrecking ball to the satisfaction of the approval authority; and

(O) A spot person shall be on site during the operation to assist the operator and to ensure site safety. The spot person shall have extensive knowledge and experience in the use of wrecking ball. The qualification and experience of the spot person shall be equivalent to those of the wrecking ball operator.

4.6 Implosion

4.6.1 Pre-blast Considerations

If it is intended to blast a building structure, the Registered Specialist Contractor (Demolition) shall carry out a comprehensive Risk Assessment Report and an Environmental Assessment Report on the effect of implosion on the affected neighbourhood. With positive results on both the risk assessment and environmental impact assessment and agreed by the relevant approval Authority, through the central processing of the Buildings Department, the Registered Specialist Contractor (Demolition) may begin studying the structure of the building and develop a blasting design. The design may include pre-weakening of the structure, the strategy in placement of the explosives and time delay so that the building will collapse in a safe manner. Pre-weakening of the structure may include cutting out a portion of the shear walls and other structural elements. A test blast may be conducted to verify the strength of the structural member and to fine tune the explosive design. Protection of the adjacent properties and habitats is also an important consideration.

4.6.2 General Concerns

General concerns and good practices in controlled demolition by blasting are discussed in the following:

(A) Pre-weakening of the structure shall be designed to ensure the structural stability before the implosion;

(B) To minimise the dispersion of building debris into adjoining land after blasting, a trench or bund wall shall be installed outside the building to contain the debris, unless a basement exists;

(C) A good design will cause the structure to fall towards the centre of the building and/or within the protected area;

(D) A good design will provide adequate and sufficient time delay to allow only one or two floors of the building debris to fall on ground level at a time in order to limit the magnitude of the impact on the ground;

(E) The design must also identify an exclusion zone to evacuate all residents or inhabitants during the blasting. The impacts of noise and dust generated during the blasting shall be considered. Radius of the typical exclusion zone shall not be less than 2.5 times the building height;

(F) If there are slopes and earth retaining walls or features, a geotechnical assessment shall be conducted to ensure that the blasting will not affect the stability of these features;

(G) The entire site shall be under 24-hour security from the installation of explosive until final blasting. Handling and storage of explosives shall be in conformance with the Dangerous Goods Ordinance, any requirements of the Commissioner of Mines and other relevant regulations. The implosion expert shall have proven experience and track records in design and supervision of blasting similar building structures to the satisfaction of the Commissioner of Mines. The blasting expert shall have acquired the relevant training and practical experience in using the proposed explosives. The blasting expert shall obtain from the Commissioner of Mines an authorization to carry out blasting. All personnel must be evacuated from the site before and during blasting;

(H) The Registered Specialist Contractor (Demolition) must co-ordinate with the government and local community to determine the best procedures in notification, schedules for the events, traffic routing, design for the sequence of events, evacuating residents, clear out personnel from the building and assigning responsibilities during blasting. For the purpose of crowd control, blasting should be carried out in the early morning of a Sunday or public holiday;

(I) An emergency plan shall be prepared to handle emergency situations such as premature explosion, misfire or interruption due to bad weather including thunder and lightning;

(J) After the explosion, the blasting expert must check to make sure that there is no unfired explosive left on site. The entire area must remain clear and under security control until the unfired explosives have been detonated or safely dealt with by the blasting expert;

(K) As far as practicable, non-electrical initiation systems should be used to avoid the risk of pre-mature detonation by stray currents, external electro-magnetic waves or radio frequencies. The installation shall include a redundant system to ensure successful detonation. Nitroglycerine based explosives are not permitted to be used.

(L) The Registered Specialist Contractor (Demolition) must provide evidence of his capability to safely perform the demolition and shall illustrate to the approving authorities that the procedures are safe;

(M) The mode of collapse shall be demonstrated to ascertain that:

(1) no part of the building will fall beyond the protected area;

(2) the impact of the structural collapse will not cause significant vibration affecting

(a) any underground tunnels;

(b) any underground utilities; and

(c) any adjoining properties.

(N) The structural safety of the building to be imploded shall be checked and certified to be sound and safe at all stages prior to implosion.

4.7 Other Methods

4.7.1 Non Explosive Demolition Agent

Non Explosive Demolition Agent (NEDA) is a static demolition agent. When the reaction takes place in a confined drill hole, the NEDA generates an expansive pressure to crack and break concrete and stone.

The NEDA is a suitable application in a restrictive environment where noise, flying debris and vibration are less tolerated. A drilling pattern shall first be designed. For large projects, test breaking shall be performed. The NEDA shall be mixed with water to form a slurry and immediately placed into the pre-drilled holes. The loading intensity and water content shall be controlled to optimise the expansive pressure and prevent blow-out of the NEDA. The breaking effect of NEDA is relatively small comparing to explosives. Secondary efforts are required to further break down and remove the debris by mechanical means.

NEDA may be used on foundation works, pile caps or structures that are fully supported.

When used in rock, NEDA should be contained within strong, flexible, impermeable bags to prevent uncontrolled entry into rock joints.

4.7.2 Saw Cutting

Saw cutting is suitable for alteration and additional works where accuracy in the cutting is important and the tolerance to noise and vibration is very limited. It can be used to cut concrete slabs and wall elements into segments. An entire building may be dismantled by saw

cutting. Saw cutting generally includes conventional disc saw and chain saw, diamond core stitch drilling and wire saw.

(A) Wire Saw Cutting

Wire saw cutting comprises a special steel wire often impregnated with diamond beads to increase its cutting ability. The wire saw method is a suitable application for projects that require precision and total control of demolition work. A hole shall first be pre-drilled for the passage of the diamond wire, the wire cutting operation follows. Because of its flexibility, it may be used for "hard to reach" areas. A diamond wire saw may also be applied in cutting off piling of marine structures and bridges. Its flexibility and range of application are depicted in Figure 4.17.

(B) Diamond Core Stitch Drilling

Diamond core stitch drilling may be adopted to cut concrete elements by continuously coring a set of holes to carve up the concrete structure. The thickness of the concrete to be cut depends on the depth of the drilling or coring equipment. Diamond core stitch drilling is particularly suitable in the removal of existing pile cap for construction of large diameter bored pile foundation.

(C) Management of Process Water

The sawing and drilling operations require large amounts of water to cool down the blade which cuts through the concrete at high speed. Provision shall be made to provide a water source for the operation and for the disposal of the cooling water.

4.7.3 Cutting and Lifting

Cutting and lifting involve the initial cutting of the structure into individual pieces or segments, and then lifting the pieces or assembly by crane onto the ground for further demolition or hauling away. Slabs can be cut into segments and then lifted off for further cutting into smaller pieces before disposal. Precast concrete structures can be cut into pieces and then lifted off as a reversal of the construction sequence when the precast elements are fabricated from pieces into an assembly of structure. Cutting and lifting may be applied to safely remove projections such as canopies, architectural features, balconies and bay windows. The typical procedures for cutting and lifting are summarised in the following:

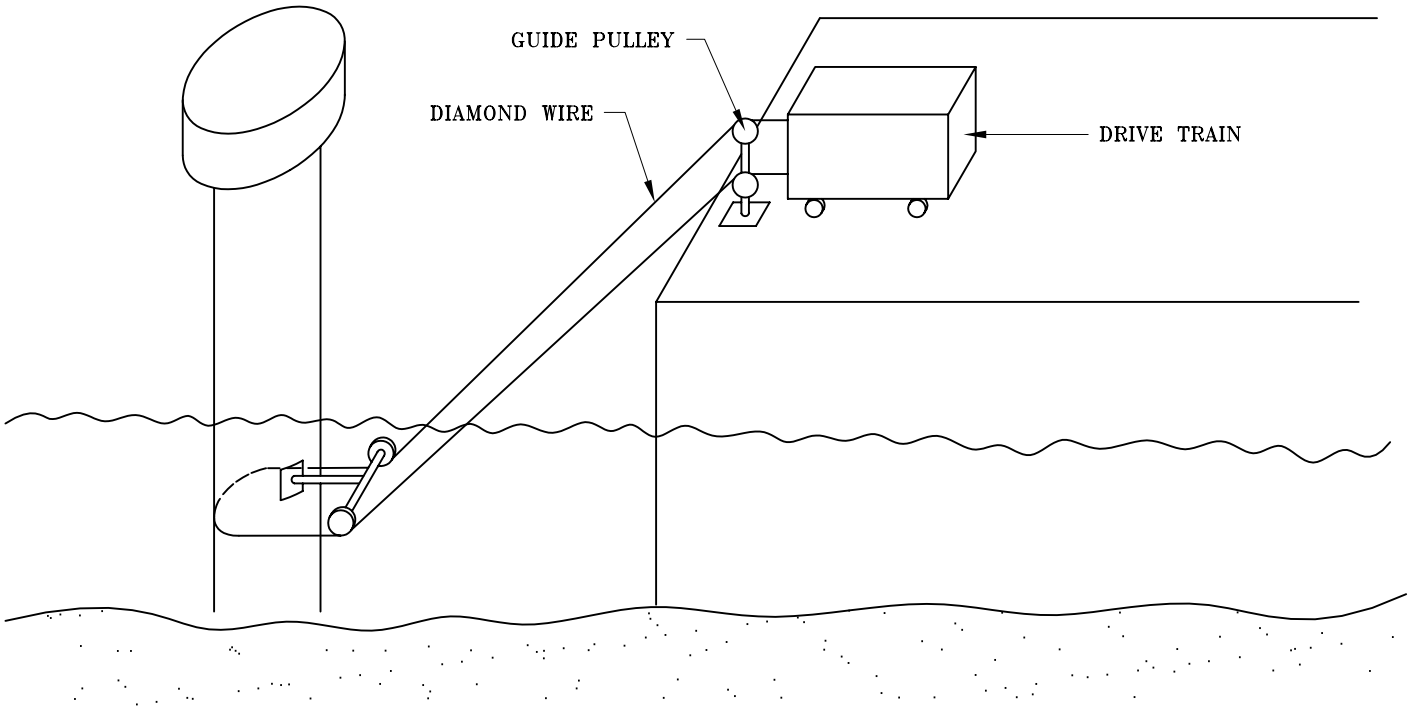

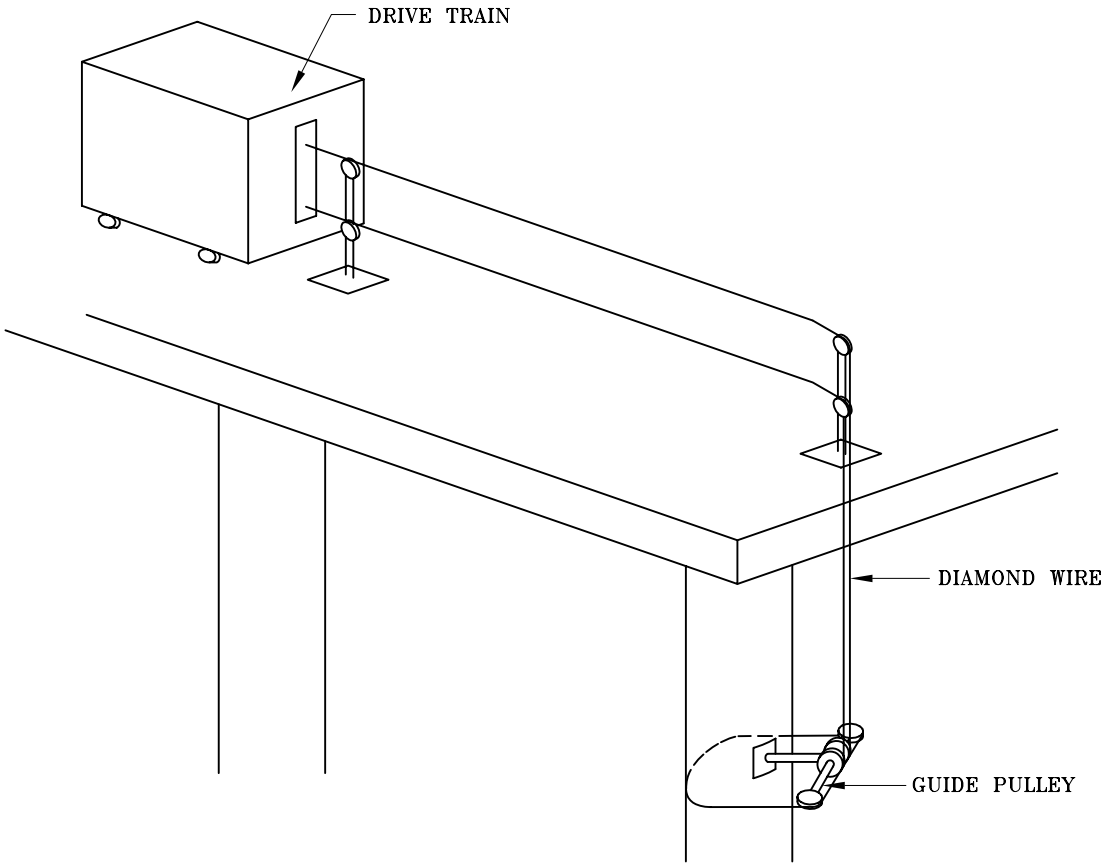

FIGURE 4.17 APPLICATION OF WIRE SAW TECHNIQUES

(A) Prior to cutting, the structural stability of the remaining structure shall be checked;

(B) The structural element to be removed shall be secured, either by temporary supports or by tie wires connected to lifting appliances. The lifting appliances must have adequate capacity to support the weight of the structural section. The wire strength shall not be less than 4 times the anticipated loads;

(C) The lifting appliance, cutting by disc saw, chain saw and diamond wire saw shall comply with the Factories and Industrial Undertakings Ordinance; and

(D) After cutting, the structural element shall be lowered to the designated area in a controlled manner. Free falling shall be avoided.

4.7.4 Mechanical Demolition

(A) General

Mechanical demolition generally involves the use of large machinery with attachment to dismantle the building from outside. The common mechanical methods include the use of a pusher arm, wire rope and clam shell. The operations of these applications are illustrated in Figure 4.18. These methods shall only be applied to isolated buildings on relatively flat ground. The concerns and good practices of the mechanical demolition generally included the following:

(1) The machine shall be operated on smooth and firm ground. It shall also have adequate counter-weight to prevent overturning during the operation;

(2) The equipment and accessories such as attachments and rope shall be inspected frequently and shall be repaired or replaced whenever necessary;

(3) The impact of the collapsed structural sections on the floor or ground shall be checked to prevent the potential overloading of the suspended floor, vibration and disturbance to adjacent properties and damage to underground utilities;

(4) The site shall have full time security to prevent unauthorized personnel entering the site. No person shall stay within the working area of the machine and the building while the machine is operating;

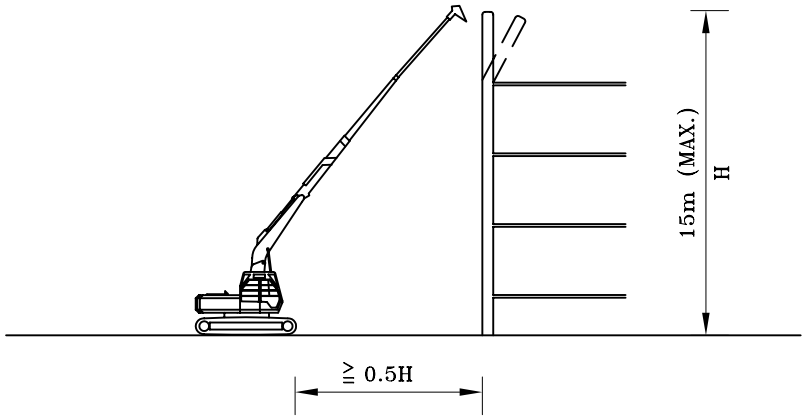

(i) MECHANICAL BY PUSHER ARM – PUSHING IN

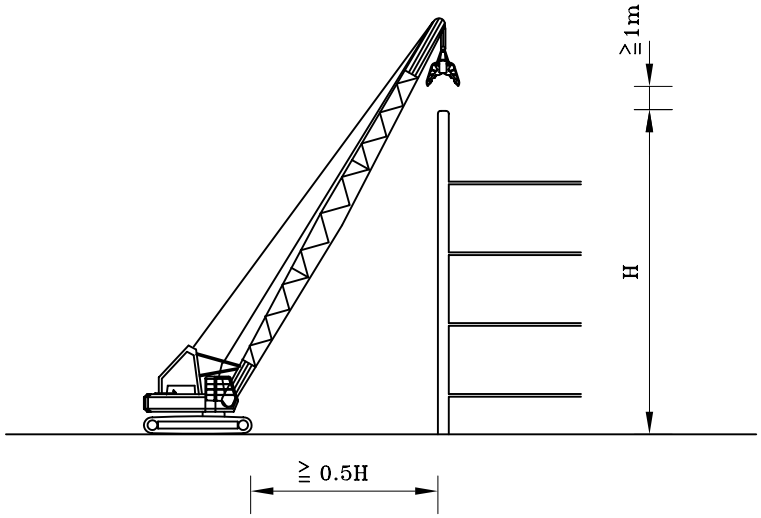

(iii) MECHANICAL BY CLAM SHELL

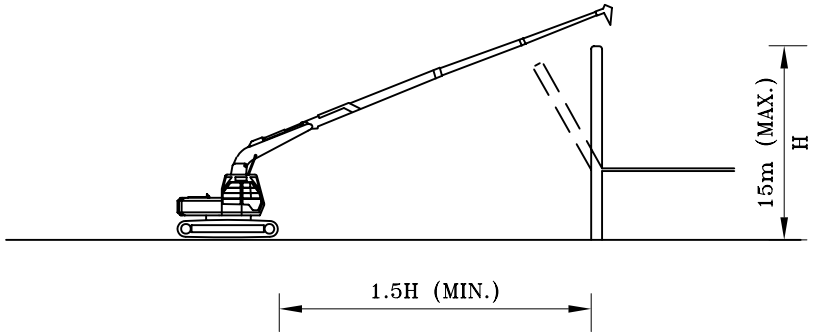

(ii) MECHANICAL BY PUSHER ARM – PULLING OUT

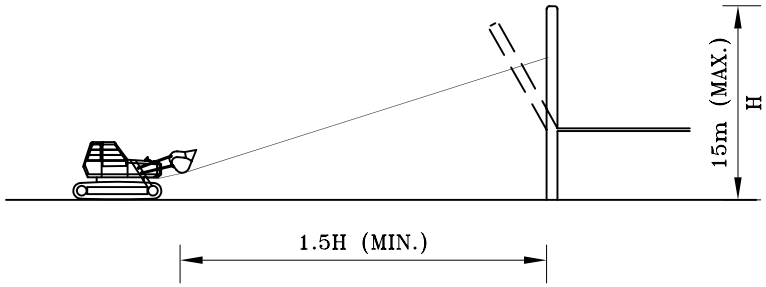

(iv) MECHANICAL BY WIRE ROPING

FIGURE 4.18 MECHANICAL METHODS

(5) Sufficient water spray or other anti-dust precautions shall be provided to minimise air pollution by dust;

(6) The cab of the machine shall be equipped with impact proofed glass and its construction shall be robust enough to protect the operator from flying debris; and

(7) A spot person shall be on site full time to provide guidance and assistance to the operator in the demolition process.

In addition to the above, specific criteria for each mechanical method are discussed in the following sections:

(B) Mechanical Method by Pusher Arm

Mechanical pusher arm involves the use of machines equipped with a pusher arm attachment for applying horizontal thrust to demolish the structural element. Special conditions for pusher arm demolition are listed below:

(1) The pusher arm shall be constructed of steel or equivalent material and shall have adequate strength to operate on the building; a crane boom shall not be used;

(2) Minimum safety distance of 0.5 times the height of the building element being demolished shall be maintained between the machine and the building for pushing into the building;

(3) Minimum safety distance of 1.5 times the height of the building element being demolished shall be maintained if structural elements are pulling out of the building;

(4) The point of application of pushing shall not be less than 2/3 of the height and not more than 600 mm below the top of the wall; and

(5) The pusher arm method shall be limited to buildings less than 15 m high.

(C) Mechanical Method by Deliberate Collapse

Mechanical demolition by deliberate collapse generally consists of systematic removal, or weakening of the key structural elements to induce the collapse of the structure. Special conditions for deliberate collapse are as follows:

(1) Minimum safety distance of 1.5 times the height of building element being demolished shall be maintained throughout the operation;

(2) The procedures shall be carefully designed and executed in the removal of key structural elements so that there will be no pre-mature collapse and the structure will collapse onto the anticipated area; and

(3) Application of the deliberate collapse method shall be limited to buildings less than 15 m high.

(D) Mechanical Method by Wire Rope Pulling

Mechanical demolition by wire rope pulling generally involves the use of an earth mover machine or mechanical winch device equipped with heavy steel wire for pulling down structural members. Special conditions for wire rope pulling are listed in the following:

(1) A safety distance of 1.5 times the height of element to be demolished shall be maintained between the machine and the building during the pulling;

(2) The machine shall always travel parallel to the line of pull during the pulling operation;

(3) In the case when pulling is done by a pulley, such a pulley device shall be securely anchored;

(4) The wire rope or chain shall be composed of steel with tensile strength not less than 4 times the theoretical force required to perform the pulling;

(5) The wire rope used for the operation shall be inspected for wear and damage at least twice daily and replaced as necessary;

(6) Any sharp edge that is to be wound by the rope shall be protected to minimise the possibility of cutting or wearing of the rope during pulling;

(7) The bottom of the wall may be pre-weakened with care and protection to ensure controlled collapse;

(8) The wire rope pulling shall be limited to buildings less than 15 m high; and

(9) All workers shall stay away from the area within reach of the rope or wire in case it breaks.

(E) Mechanical Method by clam shell

Demolition by clam shell typically involves the use of a crane equipped with a clam shell attachment which progressively bites away the structure. Special conditions for clam shell are listed in the following:

(1) A minimum safety distance of 0.5 times the height of the building element being demolished shall be maintained between the machine and the building during the operation;

(2) The process of biting off the structural elements shall begin from the top and progress downwards; and

(3) The clam shell shall be operated not less than 1 m above the structure being demolished.

4.7.5 Thermal Lance

Cutting of reinforced concrete by thermal lance involves very high temperature up to 2,000 - 4,000°C. The extremely high heat requires special precautionary measures and care. The use of a thermal lance in cutting reinforced concrete shall not be used unless:

(A) the project demonstrated that there is no other viable alternative;

(B) adequate protective measures are provided to isolate the operation and to prevent any potential fire spreading out; and

(C) adequate protective measures are provided to prevent the injury of the workers, and any third party by flame and the molten concrete.

4.7.6 Water Jet

Water jetting involves the use of a water jet stream pumped at high pressure to erode the cement matrix and wash out the aggregates. Abrasive compounds may be added for cutting reinforcing steel. The application of the water jetting shall be subject to the following criteria:

(A) City water supply shall be used in water jet cutting. Provision shall be included to dispose the water used in the operation, and to recycle the water for continuous operation through local filtration and sedimentation;

(B) The area behind the structural member to be cut shall be shielded to avoid damage to persons and properties during the cutting; and

(C) In the case when abrasive water jets are used, further precautionary measures shall be provided in accordance with manufacturer recommendations to confine the rebound of the abrasive compounds. All site personnel shall wear adequate safety cover and clothing.

5. SPECIAL STRUCTURES

5.1 Precast Concrete Structures

5.1.1 General

Precast concrete structures are constructed of precast concrete elements joined together. The continuity of the structure depends on the treatment of joints. The joint details shall be studied. In case of doubt, open up inspection at critical positions may be required.

5.1.2 Simple Precast Construction

The joints in this type of structure do not normally provide continuity. The stability of this type of structure relies on other elements such as stairs, lift shafts, shear walls or other framed structures.

(A) Dismantling

Each precast element shall be removed in the reverse order of construction and broken on the ground or an adequately supported floor. Elements providing lateral stability shall not be demolished prior to the removal of the precast elements or prior to the installation of the temporary bracing. Temporary supports shall be adequately braced or tied to laterally stable elements.

(B) Existing Lifting Points

The re-use of the existing lifting points or accessories to lift the precast elements shall not be allowed unless the record erection plans showing the function of the existing lifting points are checked and verified to be adequate for current use.

(C) Lateral Support During Lifting

Special consideration shall be given to long span precast elements with narrow compression flanges during lifting. Spreader beams shall be used to reduce the spacing of the lifting points. The use of spreader beam is illustrated in Figure 5.1.

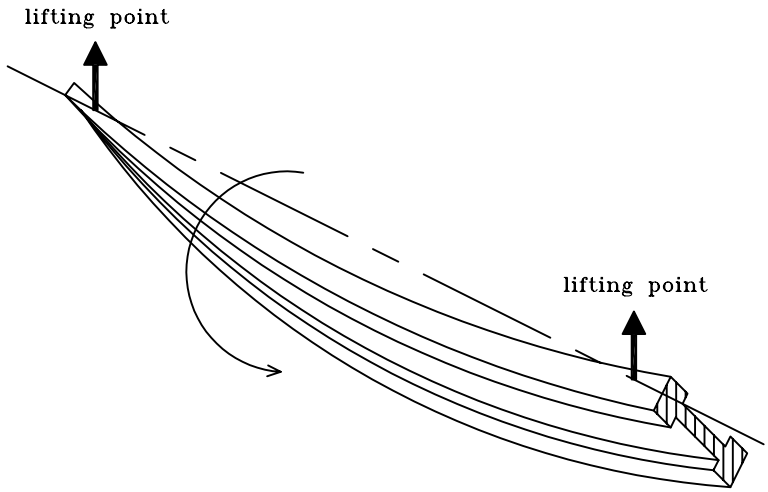

(a.) Potential lateral / rotational instability of a long slender precast element during lifting.

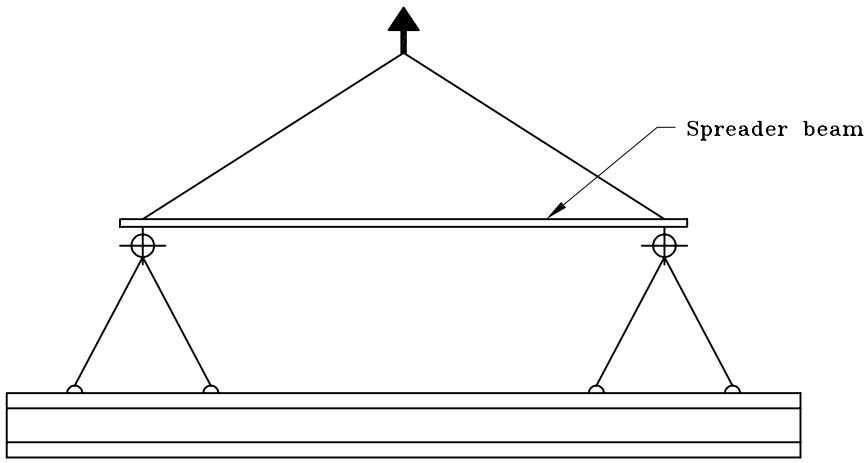

(b.) Use of spreader beam for equalizing lifting loads & to reduce unsupported length.
(use with caution for prestressed elements)

FIGURE 5.1 LIFTING OF PRECAST STRUCTURAL ELEMENT

5.1.3 Continuous Precast Construction

In this type of structure, the precast elements have continuity at their joints and the lateral stability is provided by the precast elements themselves. The continuous precast elements may be in the form of shear walls or moment resisting frames. It is possible that a combination of the simple construction and continuous construction exist in a single structure.

(A) Dismantling

The demolition of this type of structure may be performed in a way similar to that of a cast-in-place concrete construction provided that the continuous joints are cut in such a way that the lateral stability is maintained. If the precast elements are intended to be removed in a piece by piece manner in their reverse order of construction, the continuous joint shall be cut by appropriate pre-approved method such as saw cutting. The precast elements shall then be lifted off their support and lowered to the ground or to an adequately supported floor for demolition. Temporary bracing during lifting as described in 5.1.2(C) may be required.

5.2 Prestressed Concrete Structures

5.2.1 General

The prestressed concrete structures are constructed of either precast or cast-in-place concrete in which prestressing is introduced to the concrete by tensioning the steel reinforcement, or tendon, to counteract a desired degree of stress resulting from a given external loading. The types of prestressing and guidelines for identification are discussed in Appendix C.

5.2.2 Classification of Prestressed Concrete Structures

Based on the construction technique, the prestressed concrete construction can be classified into three major classes. Depending on the method of stress transfer, i.e., pre-tensioning or post-tensioning, and whether it is grouted, each class of construction can be further subdivided into separate categories as follows:

(A) Class I: Precast Prestressed Construction:

Category P1	Precast pre-tensioned
Category P2	Precast pre-tensioned/post-tensioned
Category P3	Precast post-tensioned

(B) Class II: Cast-in-Place Prestressed Construction

Category C1	Post-tensioned before application of dead and live load and having all tendon ducts fully grouted.
Category C2	As Category C1 but having the tendon ducts ungrouted.
Category C3	Post-tensioned is in stages as the load carried by the member is increased in stages as the construction progress. The tendon ducts are fully grouted in the final condition. Transfer beam supporting multi-level frames is an example of this category.
Category C4	As Category C3 but having the tendon ducts ungrouted.

(C) Class III: Others

(1) Segmental Post-Tensioned Construction

The segmental post-tensioned structures involve the construction of the main structural elements in segments. Their final integrity is achieved through post-tensioning of tendons which pass through and tie the segments together.

(2) Circumferential Prestressed Tanks

The tanks are prestressed by tendons bonded in grouted ducts or by unbonded tendons.

5.2.3 Precautionary Site Measures

(A) Detensioning

Due to the high energy stored in the prestressed members, the demolition of such members must be proceeded within a planned sequence and well controlled manner. During detensioning of the tendons, a protective screen made of sand bags or similar material such as a backed plywood screen shall be placed at the anchor ends. The protection screen is illustrated in Figure 5.2.

(B) Shoring and Site Safety

The prestressed concrete floor system shall be properly shored prior to detensioning to prevent the collapse of the system. The release of energy during the demolition of prestressed concrete could be extremely hazardous. All workers on site must be informed of the presence of prestressing in the structure and the hazardous result on deviating from the prescribed procedures. A pre-determined safety plan shall be in place.

(C) Grout

For a structure with bonded construction, the conditions of the grout shall be checked. If the tendons are not fully grouted, additional grout shall be applied to fully fill the ungrouted voids. After grouting, the prestressed structure may be demolished similar to that of a bonded construction.

5.2.4 Demolition Procedures

The following procedures for each class and category of prestressed concrete shall only be used as a guideline. Detailed procedures shall be independently developed for each structure by an engineer experienced in prestressed construction based on the design, layout of the tendons, sequence of the stressing and construction.

(A) Class I: Precast Prestressed Structures

(1) Category P1: Precast Pre-Tensioned Structures

Precast pre-tensioned structures are typically single span elements and must generally be demolished in the reverse order of construction.

The precast pre-tensioned elements can be lifted off and turned on their sides, after the connections at the supports are removed. The lifting points shall be located near the ends of the units and shall be adequately designed to ensure safe lifting of the precast elements with these elements turned on to their side. The above process will generally fracture the structure and causing a sudden release of energy. After the energy is released, the elements can then be cut or pulverised into pieces before they are hauled away.

If turning the elements on their sides does not release the energy, a sand bag or other suitable screen shall be provided around the ends. The prestressed energy can be released by appropriate means such as the one described in 5.2.4(B)(2)(c).

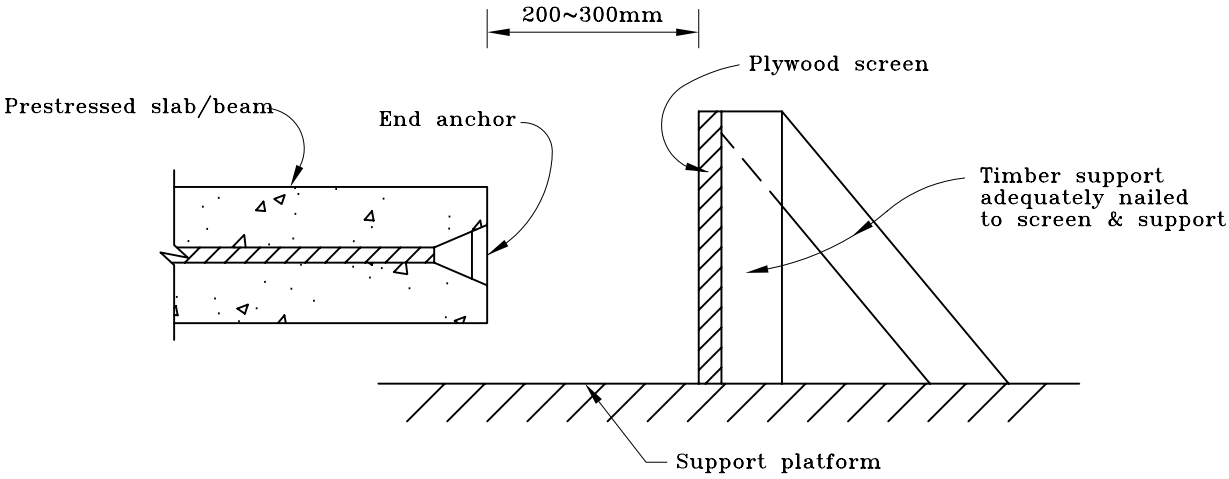

(a.) Plywood protective screen

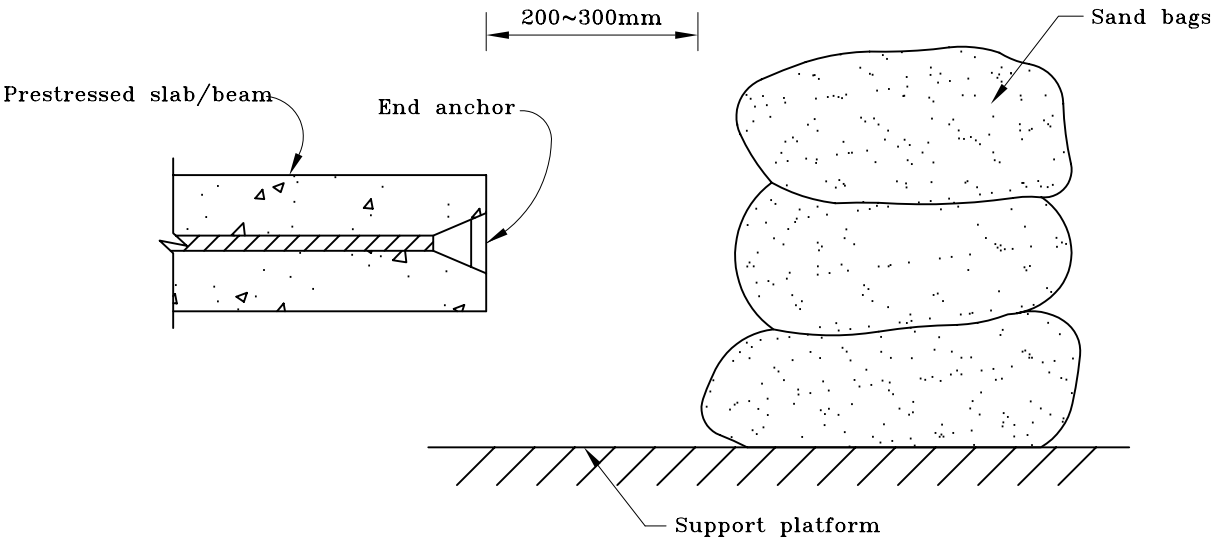

(b.) Sand bag screen

FIGURE 5.2 PROTECTION FOR DETENSIONING OF PRESTRESSED CONCRETE TENDONS

(2) Category P2: Precast Pre-Tensioned/Post-Tensioned Structures

Sometimes two or more pieces of precast prestressed elements are continuously connected together at the supports by post-tensioning. This post-tensioning shall be detensioned according to the recommendations for demolition of post-tensioned structures in Class II construction as described in the 5.2.4(B). After the post-tension energy is released the remaining precast prestressed elements may be demolished in accordance with the procedures for Category P1 elements.

(3) Category P3: Precast Post-Tensioned Structures

These precast elements shall be lifted off from their support and placed on their side if the prestressed tendons are of grouted construction. If the conduits are not fully grouted, the elements shall be placed level on the ground and the post-tensioning forces shall be released in accordance with the procedures for Category C2 elements as described in 5.2.4(B)(2).

Adequate protection must be provided at the ends of the elements in case the tendons shoot out at the ends. In general, cutting of unbonded tendons at mid-span will dampen the shoot off effect.

(B) Class II: Cast-in-Place Prestressed Structures

(1) Category C1: Post-Tensioned Grouted

These elements shall be demolished as precast elements. For a single span slab, the slab may be saw cut into segments and lifted off similarly to precast elements. For continuous spans, the prestress over the support shall be released prior to cutting the slab into segments. It must be noted that prestressing may be provided in two directions and the detailed procedures shall take this into account. For beam and slab, caution shall be exercised to avoid upward failure of the beam when the slab is removed. When detensioning of tendons is involved, all slab and beam spans shall be temporarily supported to prevent unintentional collapse of the structure.

(2) Category C2: Post-Tensioned Ungrouted

The demolition of these elements shall generally proceed as follows:

(a) Shore up all slab and beam spans for which detensioning of tendons is required;

(b) Remove all superimposed dead load;

(c) The prestressing forces can be released by cutting away the concrete in front of the anchorage until the anchorage has been loosened. Alternatively, the forces may be released by saw cutting at appropriate locations along the tendons. During the detensioning, the ends of the tendons shall be protected from shooting off; then

(d) The structure can be demolished as normal reinforced concrete;

(3) Category C3: Post-Tensioned in Stages and Fully Grouted

Care shall be exercised to avoid premature failure of the elements when the dead load superimposed on the elements is reduced as demolition progresses. The load which is carried by the element must be supported by temporary structures extended above the element. After the temporary supports are constructed, the elements may then be demolished by the following steps:

(a) Locate and mark the centrelines of the columns supporting the member;

(b) Locate the profile of the tendons and mark it on both faces of the member;

(c) Expose the exterior tendons on each face of the member midway between the centrelines of all intermediate columns supporting the member;

(d) Cut the exposed tendons at each location starting from the centre of the member on alternating faces and proceed to the ends of the member; then

(e) Repeat steps (c) and (d) until all the tendons have been completely severed.

Demolition using the above procedures shall be exercised with caution to prevent the tendons from pulling together the columns at the ends of the elements due to the elastic shortening at the exposed tendons.

(4) Category C4: Post-Tensioned in Stages but Ungrouted

Care shall be exercised to avoid premature failure of the elements when the dead load superimposed on the elements is reduced as demolition progresses. Temporary structures shall be provided to shore up the elements as needed. The prestressed force shall be detensioned sequentially in reverse order of stressing in accordance with the amount of dead load removed. The sequence of the detensioning shall preferably be in the reverse order of the tensioning when the element was constructed. When all supporting dead load and tendons are removed, the element can be demolished in the same manner as for normal reinforced concrete.
Alternatively, demolition may proceed in the same manner as for Category C3.

(C) Class III: Others

(1) The demolition of segmental construction shall proceed in the reverse order of the segmental erection. Temporary supports shall be provided as required before the post-tensioning forces are released. Where the segmental units are pre-tensioned, demolition shall proceed as for precast pre-tensioned/post-tensioned construction. Where the units are not pre-tensioned, demolition shall proceed in the same manner as for post-tensioned construction;

(2) During detensioning of the prestressed cables or tendons in a circumferential prestressed tank, appropriate protective measures, such as adequately designed protective chain nets, screens or friction brakes shall be provided to avoid uncontrolled unwinding of tendons; and

(3) The demolition of segmental construction, or circumferential prestressed tanks is relatively complex and it must be demolished under the guidance of a professional engineer experienced in this type of construction.

5.3 Statically Determinate Structures

5.3.1 General

(A) Statically determinate structures normally lack continuity, which has the following characteristics :

(1) large deflection; and

(2) high stress concentration at critical position.

The disadvantage is that if any part of the structural system fails, it can cause a disastrous collapse of the structure.

(B) Special attention is required where dealing with demolition or partial demolition of the following structures:

(1) statically determinate structures; and

(2) redundancy structures that may become statically determinate structures during demolition or after substantial alteration.

(C) Common statically determinate structures include the following:

(1) cantilevered structures; and

(2) hinged or pin-jointed trusses.

5.3.2 Cantilevered Structures

(A) In general, cantilevered structures shall be demolished prior to the demolition of the main structure of the building for each floor and before the removal of their supports, anchorages or holding down loads;

(B) In the case when 5.3.2(A) cannot be satisfied, cantilevered structures shall be properly shored until they are completely demolished; and

(C) Common problems of cantilevered structures are described in Figure 5.3;

5.3.3 Hinged or Pin-Jointed Trusses

(A) Under normal circumstances, hinged or pin-jointed structures are braced structures. Temporary supports shall be provided if bracings are removed;

(B) Hinged or pin-jointed trusses shall preferably be removed by lifting and lowering to ground level prior to demolition; and

(C) In the case when the truss has to be dismantled on the spot, the sequence of every partially dismantled configuration shall be checked.

5.4 Composite Structures and Steel Structures

5.4.1 General

Steel structures and reinforced concrete composite structures are, in most cases, designed as "simple design" or "semi-rigid design" according to earlier structural steel design codes. Under such design assumptions, the detailing of the beam column joints is, in most cases, not rigid joints and the structure may become statically determinate during demolition or substantial alteration. Details of demolition of statically determinate structures are referred to in 5.3.

5.4.2 Demolition Method

Similar to conventional buildings, composite structures may be demolished by top down method, cut and lift or other methods that are adequate for the site condition.

5.4.3 Shoring of Slender Member

Structural steel members in steel structures and reinforced concrete composite structures are generally designed as slender members subject to bending and/or compression. Except for concrete encased steel members the Registered Structural Engineer shall check the load resisting capacity of the slender structural members when lateral restraints are removed during demolition. Proper shoring shall be installed if required.

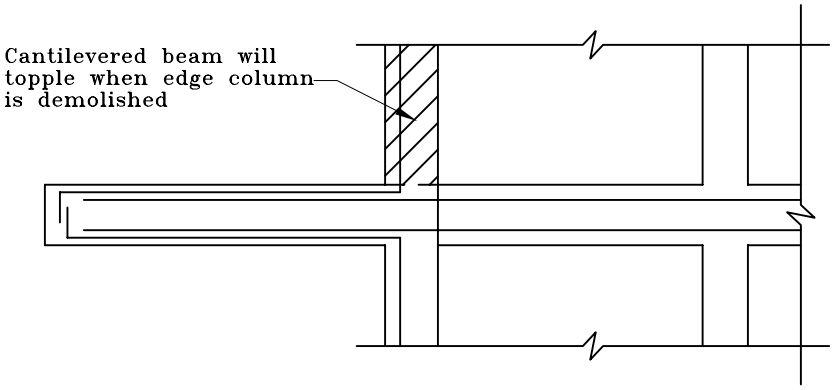

CASE 1. Main reinforcements in cantilevered beam bent up at columns. The cantilevered beam may topple when the column/walls are demolished.

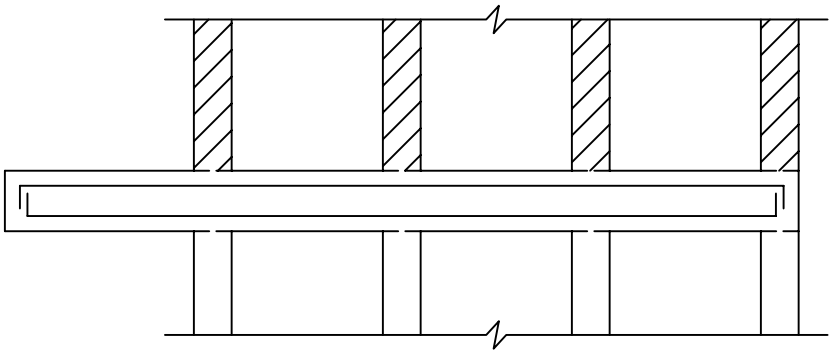

CASE 2. The load on the cantilevered beam is counter-balanced by the loading above the beams, the cantilevered beam may topple when the counter balance load is removed.

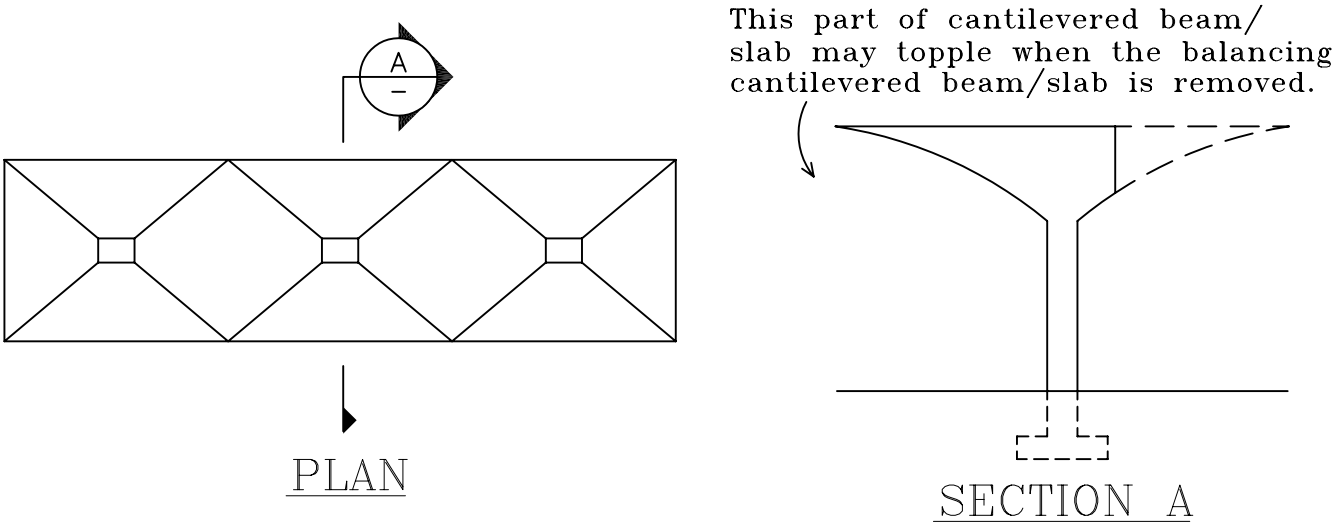

CASE 3. When one side of a balanced cantilevered beam/slab is removed, the remaining cantilevered beam/slab may topple.

FIGURE 5.3 COMMON PROBLEMS OCCUR IN CANTILEVERED STRUCTURES

5.5 Cladding Walls

5.5.1 Demolition Method

Demolition of cladding walls shall be proceeded with extreme caution since cladding walls are mostly external features. Each cladding wall shall be demolished individually in the reverse order of its construction. Saw cut and lift is suitable for dismantling cladding walls.

5.5.2 Guidelines

(A) Support

The cladding wall shall be fully supported before disconnection from its supporting structural member. Crane or other lifting appliances may be used to support the total weight of the cladding. The lifting appliances and wire must have sufficient strength to support the weight of the cladding wall.

(B) Disconnecting from Building

The connections or joints to the building structure shall be disconnected only after the cladding wall is fully supported.

(C) Handling

Once the cladding wall is separated from the building frame, it may be lifted away and lowered onto the ground or adequately supported floor for further processing. Depending on the type of cladding, it may be reused as building materials or further broken down and transported away as construction debris.

5.6 Hanging Structures

5.6.1 General

The hanging structure is primarily composed of a structural system in which the floor loading is suspended by tension members hung from other elements at the upper portion of the structure. Unlike conventional structures, hanging structures shall be demolished from their bottom level and progressively upward to the support.

5.6.2 Demolition Method

Selection of methods shall depend on the actual site conditions and the construction materials. Cutting and lifting, in general, are suitable for dismantling the structural components of the hanging structure. Temporary supports may be needed to maintain the stability of the hanging structural elements during the demolition process.

5.6.3 Guidelines

The following items shall be considered in demolishing hanging structures:

(A) The sequence of demolition shall be planned such that the hanging loads are gradually reduced, without overstressing at any particular structural element or ties;

(B) Hanging ties shall be destressed before cutting;

(C) Main gravity structures supporting the hanging ties and other elements that provide lateral stability of the hanging structure shall not be demolished prior to complete release of all hanging ties; and

(D) The main gravity structure shall be checked so that it is stable at all stages of demolition, bracing may be required if deemed necessary.

5.7 Oil Storage Facilities

5.7.1 General

Oil storage facilities generally consist of structures that contain petroleum products which may be classified as hazardous materials or dangerous goods. The key issues for demolishing the oil storage facilities are the clean-up and disposal of the hazardous materials and dangerous goods. Once the contamination assessment and initial clean-up are completed, the method of demolition may be selected based on the structural and site conditions. Additional clean up may

be required if the contamination has extended to the adjacent area and/or the subsurface soil. Precautionary measures and work systems to be adopted for working in such an environment shall comply with the Factories and Industrial Undertakings (Confined Spaces) Regulation.

5.7.2 Demolition Method

The selection of methods and actual demolition of oil storage structures shall be carried out in accordance with the structural aspects. Storage buildings may be demolished by top down method or other methods for building demolition. Circular steel tanks may be dismantled by the use of hydraulic shear or other appropriate methods. Reinforced concrete tanks may be dismantled by any method that is suitable for reinforced concrete construction. If flammable fuel is likely to be present, use of flame cutting shall be avoided. Methods of demolition are referred to in Section 4.

5.7.3 Guidelines

The following items shall be considered in demolishing oil storage facilities:

(A) Chemical Waste Clean Up

Prior to demolition, all oil storage facilities shall be thoroughly cleaned. Any accumulated gas shall be removed. The management of waste and wastewater generated from the process must conform with the Waste Disposal Ordinance and the Water Pollution Control Ordinance. Additionally, the management of any waste which is classifiable as a chemical waste, such as oil sludge from tank cleaning must also comply with the Waste Disposal (Chemical Waste) (General) Regulation. In the case when a dangerous goods storage licence has been issued, the relevant licensing authority, i.e. Fire Services Department, or Gas Standard Office, shall be informed prior to any demolition operation. Any risk of fire explosion and exposure to toxicity shall be minimised.

(B) Soil Contamination Assessment

After completion of demolition, Soil Contamination Assessment (SCA) shall be carried out according to the SCA and Clean-up proposal agreed by the EPD. In the case when soil contamination is discovered, the contaminated soil shall be removed in its entirety and replaced with clean fills. The placement of the fill shall be under the supervision of the Authorized Person or Registered Structural Engineer or an equivalent professional. The disposal of contaminated soil shall be carried out in strict

accordance with the EPD requirements. In-situ treatment of the contaminant may be applied subject to the approval of the EPD.

(C) Handling of Contaminated Soil

Precautions must be taken during excavation and removal of the storage tank. The excavation and disposal of contaminated soil shall be handled with care and be in compliance with the EPD requirements. Special care shall be taken to confine the contamination. Protection of the surrounding properties to provide a safe support for any below ground works shall be considered. Temporary shoring for the excavation shall be designed in accordance with 3.5.

5.8 Marine Structures

5.8.1 General

Marine structures include ocean structures and all kinds of water front structures. Besides the basic considerations for normal land operation, marine demolition shall also attend to the debris handling and the dismantling of the marine piles.

5.8.2 Demolition Method

The methods used for demolishing marine structures are similar to those for buildings founded on land. Top down methods may be applied to demolish the superstructure. Non-explosive demolition agent may be used to demolish the piers. For sensitive water, saw cut and lift can be used to demolish the platform and the piers to minimise debris falling into water.

5.8.3 Guidelines

(A) Soundings

Soundings shall be performed before the demolition so that the seabed condition is defined and any unanticipated underwater structure can be reviewed. The pre-demolition sounding record shall be used as a basis for the scope of restoration.

(B) Pier Structure

If mechanical plants and/or trucks will travel on the platform supported by piers, the structure of the platform slab shall be checked to ensure that it can support the machine operation and the anticipated debris loading.

(C) Protection of Marine Environment

The effect of the demolition on the marine environment shall be considered. If the demolition site is scheduled to be reclaimed, concrete debris may be left on the seabed. Otherwise, all the debris dropped on the seabed during demolition must be removed. The seabed shall be restored to the comparable depth of the pre-demolition stage. A silt screen or underwater fence shall encompass the site to contain debris and turbulence generated by the demolition. It may also prevent marine life from entering the site area during demolition. The silt screen shall be taken out after the area is completely restored.

(D) Piling

As far as practicable, piling shall be pulled out entirely, or, as a minimum, it shall be cut off at 3m below the seabed or a desirable depth below the original seabed level, depending on the future use of the area.

5.9 Underground Structures

5.9.1 General

From the operational and economic standpoints, demolition of underground structure shall be incorporated into the new foundation construction. Such arrangement may eliminate the redundancy of the temporary works for soil retention and dewatering systems.

5.9.2 Demolition Method

With appropriate shoring and protection, underground structures above the basement floor may be demolished by top down methods or other methods that are suitable for the specific site conditions. The use of non-explosive demolition agents may minimise vibration impact on the adjacent foundation. Diamond core stitch drilling is suitable for cutting localised underground obstructions such as an old pile cap without completely demolishing the whole pile cap.

5.9.3 Guidelines

(A) Overall Stability

During the course of demolition, the stability of the building under demolition and any remaining parts of it shall be maintained at all times.

In high water table areas, assessment shall be made to ensure that the remaining structure will have adequate factor of safety against uplift upon demolition at all stages. If necessary, the

uplift pressure acting on the basement structure shall be relieved before demolishing the structure.

(B) Shoring

A geotechnical evaluation shall be conducted to determine the soil stabilisation and retaining schemes for protection of the adjacent properties as well as the operation of the below ground demolition. The shoring plan shall be taken into account of the construction method to the original underground structure. If the floors or part of the building structure acts as propping to the basement wall, this propping system shall be maintained or a shoring system shall be provided to safely support the basement wall when demolishing the building structure.

(C) Dewatering

If a dewatering system is required, the effect of the dewatering on adjacent buildings, structures, land, street and services must be considered in the design. It is also important that the disposal of the ground water shall not affect the quality of the surrounding water resource and/or cause localised flooding.

(D) Existing Foundation

The existing piles shall be evaluated and, if possible, incorporated into the new foundation system. The bearing capacity of the old foundation can be determined by reviewing the previous design and by performing actual load tests and/or test borings.

(E) Site Security and Safety

The site shall be secured to prevent any unauthorized person from entry, particularly into the basement area. If work is to be performed in deep excavated area, an escape route must be provided.

5.10 Structures Supporting Ground or Sitting on Slopes

5.10.1 General

Demolition of buildings or structures supporting land or slopes; or buildings or structures sitting on slopes or retaining walls may affect the stability of adjacent buildings, structures and land and may even create regional slope instability due to removal of toe weight. Maintaining adequate ground support by backfilling or structural support during demolition work is important. The demolition plan should be properly engineered by a competent and experienced geotechnical engineer.

5.10.2 Demolition Method

Top down method is suitable for demolition of hillside slope structures. Other methods may be applicable depending on the actual site conditions.

5.10.3 Guidelines

(A) Buttress/Shoring for Building Supporting Ground

If part of the building structure serves as a retaining wall system, the height of the building that is required to be left in order to safely support the retaining structure shall be determined. Adequate shoring and/or buttress shall be provided prior to the demolition of the remaining structure. A demolition plan shall be provided to the foundation contractor so that the shoring work installed during demolition are considered and protected during the foundation work.

(B) Retaining Wall System

Prior to demolition of the retaining wall, the slope or land supported by the retaining wall system must first be stabilised. Stabilisation may be achieved by excavation of the soil behind the retaining wall to a free standing stable slope or by installing temporary or permanent support such as sheet piling, soldier pile, soil nails or other appropriate methods. The scheme for stabilisation of the slope or land behind the retaining wall shall be properly engineered.

(C) On-grade Floor Slab

Unless site conditions allow and with the support of an engineering report, the on-grade floor slabs shall remain to protect against erosion. The floor slabs can also serve as impermeable cover against infiltration.

(D) Surcharge on Slope and Retaining Wall

No storage of debris or surcharge shall be imposed on the area behind or on the top of the retaining wall and/or slope. Surcharge on the top of the retaining wall and/or slope may affect its stability.

(E) Drainage

The water table may affect the stability of the slope. Drainage from surface runoff, off site drainage and infiltration shall be considered and managed throughout the project. Existing subsoil slope drainage system should also be maintained.

6. SITE SUPERVISION AND INSPECTION

6.1 General

Demolition consists of operational processes in dismantling structures in a sequential order that is documented in a method statement. Demolition works can be carried out safely when the sequence of demolition works is followed and each demolition process is properly executed. To achieve this end, proper supervision of the demolition work and adequate training of on site personnel are essential.

A site supervision plan shall be prepared in accordance with the Technical Memorandum for Supervision Plans and the Code of Practice for Site Safety Supervision.

6.2 Resident Supervision for Demolition of Complex Structures

For sites involving the demolition of complex structures, such as flat slab, prestressed concrete, transfer plate, hanger, long span beam (greater than 10m), steel framed construction, cantilevered structure with span greater than 1.2m and is over street, buildings which also act as earth-retaining structures supporting adjacent ground etc., a site engineer should be appointed by the Registered Specialist Contractor (Demolition) to oversee the entire process of such demolition works. The site engineer shall be a Registered Professional Engineer in the structural, civil or building discipline or he/she shall comply with the requirements as laid out in the corresponding Practice Note for Authorized Persons and Registered Structural Engineers issued by the Buildings Department from time to time.

APPENDIX

APPENDIX A

DEMOLITION CHECKLIST

1. Before Demolition

1.1 Site Location

- ☐ Identify site location, neighbouring conditions, adjoining buildings, slopes, and retaining walls.
- ☐ Identify special site restrictions such as the designated scheduled areas, specific restrictions on the time of operation, limitation on the noise and vibration etc.
- ☐ Identify impact on special buildings adjacent to the site which may be affected by the demolition project such as hospitals and other occupancies that are sensitive to noise, vibration and dust or other nuisance produced by the demolition.

1.2 Project Site and Building Structures to be Demolished

- ☐ Identify the building/structures to be demolished.
- ☐ Verify dimensions of site, building set backs, available working spaces etc.
- ☐ Identify hoarding/covered walkway requirements.
- ☐ Verify the dimensions of buildings, such as overall building height, headroom of floors, and building footprint.
- ☐ Verify the building construction, types of material used in construction of the building, construction method, illegal construction, special structural features that need special treatment during demolition such as cantilevered structures, precast structures and prestressed structures etc.
- ☐ Verify the existing fixtures: any features which may affect the demolition progress and need to be removed prior to demolition of the structure, such as water tanks, air conditioning units and other mechanical services.

- ☐ Verify the building use: the type of occupancy, the history of building use and any illegal use.

1.3 Utilities Location

- ☐ Verification of all below ground and overhead utilities.
- ☐ Termination and disconnection of any services to the building to be demolished in accordance with the requirements of the utility companies.
- ☐ Arrangement of temporary utilities for the project use, such as water supplies for dust suppression, etc.

1.4 Demolition Schedule

- ☐ Identify factors that may affect the demolition schedules such as any operational restrictions imposed by regulations and anticipated seasonal weather conditions.
- ☐ Develop a realistic schedule which will reflect the time required for installation of precautionary measures, testing and removal of hazardous materials, if any, processing of approval and consent, demolition process, clean up and site restoration.

1.5 Testing and Removal of Hazardous Materials

- ☐ Arrange investigation for asbestos containing materials by a registered asbestos consultant.
- ☐ If asbestos abatement work is required, submit an Asbestos Investigation Report and Asbestos Abatement Plan and notification of commencement of asbestos work to EPD and Labour Department.

1.6 Safety Measures

- ☐ The requirements of covered walkway and catch platform for pedestrian protection.
- ☐ The requirement of catchfan, if necessary.

- ☐ The requirement of double layer scaffolding, screens and working platforms for retaining dust and flying debris if the method used and site conditions warrant.

- ☐ The safety procedures for machine operation. Adequate ground or floor support for the machine; and the installation of temporary proppings.

- ☐ Temporary supports and bracing for any weakened structures.

- ☐ Protection of vehicular and pedestrian traffic adjacent to site.

- ☐ Supports for adjacent retaining wall and/or slopes.

1.7 Debris Handling

- ☐ Sorting and removal of non-structural materials such as timber, doors and windows etc. and disposal to recycling facilities or landfill.

- ☐ Adequate number and size of chutes depending on the rate of debris generation, and the disposal route.

- ☐ Planning of traffic route for debris handling, including provision of lorry car parks.

1.8 Preparation of Demolition Plan (details refer to Appendix B)

1.9 Stability Report with Calculations

- ☐ Stability of building to be demolished.

- ☐ In the case of powered mechanical plants or equipments are used, stability of the building.

- ☐ Shoring to support powered mechanical plants.

- ☐ Effect on neighbourhood building, adjoining properties, and party walls caused by the demolition.

- ☐ Structural or geotechnical calculation to support adjoining properties.

1.10 Consent Application

- ☐ Submit Supervision Plan;
- ☐ Submit names and details of Technically Competent Persons;
- ☐ Submit details of operators of powered mechanical plant or equipment proposed to be used;
- ☐ Submit details of the debris disposal and management system; and
- ☐ Submit details of site engineer, if required to be appointed.

2. During Demolition

- ☐ All on site precautionary measures and temporary supports for adjacent properties are installed according to the design in the method statement.
- ☐ Removal of hazardous materials, if any, are completed before the demolition. Chemical wastes such as oily sludge from oil tank cleaning, asbestos waste, unwanted toxic chemicals are managed in compliance with the Waste Disposal (Chemical Waste) (General) Regulation and the Waste Disposal Ordinance.
- ☐ All site personnel are fully informed about the specifics of the projects and the necessary precautionary measures to be taken to ensure safety.
- ☐ Establish emergency access.
- ☐ Establish clear and operational line of communication to the supervisor.
- ☐ The demolition to be progressed in conformance with the method statement and/or with the approval of the AP and RSE.
- ☐ Removal of debris to avoid accumulation, considering the traffic condition and availability of trucks.
- ☐ Control the dust emission in compliance with Air Pollution Control (Construction Dust) Regulation.

- ☐ Adequate supervision by full time competent supervisor on site, periodic visit by representatives of the AP and RSE, and full time supervision by engineer for special structures as required.

- ☐ Protection of adjoining party wall during the demolition.

- ☐ Ensure all workers follow safety procedures and the machines and equipment are well maintained.

- ☐ Provide security for the site as appropriate.

- ☐ Schedule regular inspection and maintenance of scaffolding, and special inspection before and after typhoon or after fire accident.

3. After Demolition

- ☐ The site shall be clear of debris and levelled.

- ☐ The boundaries shall be secured against unlawful entry.

- ☐ Excavations, if any, shall be protected.

- ☐ For sloping site and/or site with retaining wall the following items shall be included.

  - Ground surface shall be sealed to prevent water infiltration.

  - Surface drainage shall be provided.

  - Demolition plan shall be provided to the foundation contractor so that temporary supports constructed during demolition can be maintained.

APPENDIX B

DEMOLITION PLAN CHECKLIST

All the information and data collected during the pre-demolition survey shall be used as input for choosing the method for the demolition project. Although the demolition method shall be efficient and cost effective, however, in developing the Demolition Plan, the author shall always have public safety and site safety in mind. Each project has its unique features and conditions. Demolition Plan shall be customised to meet the conditions of the individual project. One of the purposes of the Demolition Plan is to provide instructions and guidelines for the on site personnel to follow so that the works can be performed safely and effectively. Therefore, when developing the Demolition Plan, it has to bear in mind that the Demolition Plan shall be straight forward, easy to follow and understood by personnel at various levels of education. Typically, the Demolition Plan shall include, but not be limited to, the following information:

1. Location Plan

A scaled plan showing the following information:

- ☐ The scale of the plan shall be in according to B(A)R13.
- ☐ Location of the project building with respect to lot boundary, adjacent footpath and traffic way.
- ☐ Location and relative heights of existing utilities, adjoining buildings and properties and their use.
- ☐ The plan shall be fully dimensioned with elevations shown.

2. Existing Building Information

The Plan showing the project building and site conditions shall include the following:

- ☐ An assessment on the conditions of the building, site and adjacent properties including their historical and existing use and traffic conditions of the abutting roads.

- ☐ Any features that need protection and may induce hazard during the demolition program such as environmental or historical features, adjacent slope protective features, special features such as flyover and footbridges and existing utilities such as overhead cables etc.

- ☐ Proposed arrangement for the removal/disposal of hazardous materials and/or chemical wastes if they are present.

3. The Layout of the Building, including Sections, and Existing Structural Information

A structural plan shall include the following:

- ☐ The overall height of the building, the ceiling height of the floors, dimensions and depth of the basements, if any.

- ☐ Structural plans and sections, details and layouts of the structural supports and the construction materials, if available.

- ☐ Structural evaluation of the adjacent buildings and shared features such as party wall, staircases and common supporting structures.

- ☐ Information on any special structures that require special attention, such as cantilevered structures, prestressed concrete, precast concrete, steel composite structures, cladding walls, stressed skin structures, hanging structures etc.

4. Demolition Procedure and Sequence of Operation

The Plan showing the proposed method used to demolish the structure shall include the following:

- ☐ Descriptions of the equipment to be used.

- ☐ Specific guidelines on the limitations of the machine's operation such as travel area, specific distance from the building line and any area with inadequate support or limited headroom.

- ☐ The sequence and proposed procedures for the demolition.

- ☐ Detail instructions for demolishing special features and critical areas that may impact on the general safety of the public and on site personnel.

- ☐ Specific precautionary steps for identifying these features.

5. Precautionary Measures

Specification, and construction details for precautionary measures which are essential to the project safety. The type of precautionary features shall be selected to best meet the requirements of the demolition method and the site conditions. The following features shall be included wherever it is necessary:

- ☐ Covered walkways, catch platforms and hoardings.
- ☐ Scaffolding and catchfans.
- ☐ Temporary supporting systems to support machines working on the building floors.
- ☐ Temporary supports for cantilevered structures and for bracing weakened structural elements.
- ☐ Detailed design for temporary support and protection of any structure that may be affected by the demolition, such as party walls, or any attached structures, whether they are legal or not.
- ☐ Inspection and maintenance frequency for the precautionary measures.
- ☐ Support for adjacent retaining walls or slopes that may be affected by the demolition.

6. Debris Handling

- ☐ A proposed plan for conveyance of debris, on site sorting and management, estimated amount of debris required for off site transportation.

7. Special Safety Considerations

- ☐ Means of emergency escape, and access route.
- ☐ Means to reduce the dust, noise and vibration impacts.
- ☐ Storage and handling of any flammable material that may be used in the demolition process.
- ☐ Proper packaging, labelling and storage of asbestos/chemical waste generated in the demolition process.

8. Traffic

- ☐ If the project involves any temporary closure of traffic, a Traffic Impact Assessment with detail locations of the temporary traffic signs shall be provided.

9. Post-Demolition Arrangement

- ☐ Permanent treatment to party walls and stabilisation of adjacent structures.
- ☐ Site security.
- ☐ Stabilisation of excavation, if any.
- ☐ For sloping sites or sites with retaining walls, additional arrangements for sealing off ground surface, provide adequate drainage and stabilisation of the slopes and/or retaining structures.

10. Chinese Version

- ☐ Chinese Version of the Demolition Plan shall be provided.

APPENDIX C

PRESTRESSED CONCRETE AND GUIDELINES FOR IDENTIFICATION

1. Types of Prestressing

(A) Pre-tensioning

Pre-tensioning is a prestressing process in which the tendons or cables are tensioned prior to the casting of concrete. The prestressing is then transferred to the hardened concrete by bonding. This type of process is commonly used in construction of precast elements including structural and non-structural, such as precast concrete cladding. Normally, the tendons are placed in one direction of the element along its longitudinal axis.

(B) Post-tensioning

Post-tensioning is a prestressing process in which the tendons or cables, encased in sheathing or ducts, are placed without tensioning prior to casting of concrete. When the concrete attains an acceptable specified strength, the tendons will be tensioned by jacking at the ends of the member through the anchors. After the tensioning is done, the sheathing will be either grouted with cementitious grout or left ungrouted. In the former case, the construction is known as bonded construction. In the latter case, it is the unbonded construction. In the case of the unbonded construction, the sheathing is normally filled with grease. The prestressing tendons may be placed in two directions in particular for slab construction.

2. Guidelines for Identification of Prestressing Structures

2.1 Record Drawing

Prior to the demolition of a building, a full investigation must take place to determine if any prestressed construction exists in the structure. This can be obtained through review of the record drawings of the buildings or through site observation if the record drawings are not available. If record drawings are available, information should be obtained on the structural design, on the method and sequence of the tensioning, and on whether the tendons are bonded or unbonded.

2.2 Characteristics of Prestressed Concrete

If record drawings are not available, the following provides some minimum guidelines for identifying the potential existence of prestressed construction.

(A) Review the existing floor system and the type of construction. It could be an indication of possible use of post-tensioning construction for a one-way or two-way slab with a span exceeding 8 metres, for a joist system exceeding 11 metres and for a beam system exceeding 15 metres.

(B) In addition to the above guidelines, the span depth ratio shown in Table C-1 could be used as a supplement for judgement.

(C) Large span beams supporting multi-storey columns above them may be an indication of being post-tensioned.

(D) If long span precast concrete construction is found, it is normally quite easily identified, as jointing between precast units quite often are visible with even soffit level. The units may be prestressed.

(E) Check the edges of the slab, along the perimeter of the building, along the inside face of stairwells, elevator shafts, duct shafts, etc. for signs of post-tensioned anchorage or any signs of burned off tendon ends.

(F) Check the ends of beams for any patches of regular shapes which could indicate the existence of prestressed tendons.

(G) During the course of demolition, if any concrete elements exhibit an unusually high degree of resilience upon impacting with demolition tools, this could be an indication that the member is prestressed.

When prestressing is suspected without any record drawings, further investigation shall be performed to identify the layout and construction of the system. A discovery of one post-tensioned floor in a structure does not necessarily prove that all floors are post-tensioned and vice versa.

Table C-1 Normal Span Depth Ratio of Reinforced Concrete Floor System, Exceeding which Could be an Indication of the Existence of a Prestressed System

Floor System	Normal Span Depth Ratio	
	Single Span	Continuous Span
One way slab	25 to 30	30 to 35
Two way slab	30 to 35	35 to 40
Floor joists	20 to 25	25 to 28
Beams	18 to 20	20 to 25

APPENDIX D

REGULATIONS RELATING TO DEMOLITION PROJECTS

1. Building demolition is subject to the following legislation and subsidiary documents administered by the Building Authority:

(i) The Buildings Ordinance, Laws of Hong Kong Special Administrative Region, CAP 123;

(ii) The Building (Administration) Regulations;

(iii) The Building (Construction) Regulations;

(iv) The Building (Demolition Works) Regulations;

(v) The Building (Planning) Regulations;

(vi) Code of Practice for Demolition of Buildings;

(vii) Practice Note for Authorized Persons and Registered Structural Engineers 71: Demolition Works - Measures for Public Safety;

(viii) Practice Note for Authorized Persons and Registered Structural Engineers 75: Hoardings, Covered Walkways and Gantries (Including Temporary Access for Construction Traffic) - Building (Planning) Regulations Part IX;

(ix) Practice Note for Authorized Person and Registered Structural Engineers 175: Antiquities and Monuments - Antiquities and Monuments;

(x) Practice Note for Registered Contractors 4: Hoardings amd Covered Walkways - Building (Planning) Regulations Part IX;

(xi) Practice Note for Registered Contractors 6: Demolition Works – Measures for Public Safety; and

(xii) Technical Memorandum for Supervision Plans.

2. Building demolition is subject to the following legislation and subsidiary documents administered by the Environmental Protection Department:

(i) Air Pollution Control Ordinance;

(ii) Air Pollution Control (Construction Dust) Regulation;

(iii) Environmental Impact Assessment Ordinance;

(iv) Noise Control Ordinance, and relevant Technical Memoranda;

(v) Waste Disposal Ordinance;

(vi) Waste Disposal (Charges for Disposal of Waste) Regulation;

(vii) Waste Disposal (Chemical Waste)(General) Regulation;

(viii) Water Pollution Control Ordinance;

(ix) Code of Practice on the Handling, Transportation and Disposal of Asbestos Waste; and

(x) Code of Practice on the Packaging, Labelling and Storage of Chemical Waste.

3. Building demolition is subject to the following legislation and subsidiary documents administered by the Labour Department:

(i) Factories and Industrial Undertakings Ordinance;

(ii) Factories and Industrial Undertakings Regulations;

(iii) Factories and Industrial Undertakings (Safety Management) Regulation;

(iv) Factories and Industrial Undertakings (Lifting Appliances and Lifting gear) Regulations;

(v) Factories and Industrial Undertakings (Protection of Eyes) Regulations;

(vi) Factories and Industrial Undertakings (Noise at Work) Regulations;

(vii) Factories and Industrial Undertakings (Electricity) Regulations;

(viii) Factories and Industrial Undertakings (Dangerous Substances) Regulations;

(ix) Factories and Industrial Undertakings (Safety officers and Safety Supervisors) Regulations;

(x) Factories and Industrial Undertaking (Asbestos) Regulation;

(xi) Factories and Industrial Undertakings (Confined Spaces) Regulation;

(xii) Factories and Industrial Undertakings (Loadshifting Machinery) Regulation;

(xiii) Factories and Industrial Undertakings (Gas Welding and Flame Cutting) Regulation;

(xiv) Occupational Safety and Health Ordinance;

(xv) Occupational Safety and Health Regulation;

(xvi) Code of Practice: Safety and Health at Work for Gas Welding and Flame Cutting;

(xvii) Code of Practice: Safety and Health at Work for Manual Electric Arc Welding;

(xviii) Code of Practice: Safety and Health at Work with Asbestos;

(xix) Code of Practice for Safety and Health at Work in Confined Spaces; and

(xx) Guidance Notes – Safety at work (Falsework – Prevention of Collapse).

(xxi) Construction Sites (Safety) Regulations;

(xxii) Code of Practice for Bamboo Scaffolding Safety; and

(xxiii) Code of Practice for Metal Scaffolding Safety;

4. In the design of hoarding, covered walkways, temporary works, and possible modifications of the existing building structure, the following documents are relevant:

(i) Building (Planning) Regulations which stipulate general requirements on hoarding, covered walkways and contractor sheds;

(ii) Building (Construction) Regulations which stipulate general requirements on construction including hoarding requirements;

(iii) Building (Demolition Works) Regulations which stipulate requirements on precautionary measures;

(iv) Code of Practice on Structural Use of Concrete;

(v) Code of Practice on Structural Use of steel;

(vi) Code of Practice on Wind Effects in Hong Kong;

(vii) Code of Practice for Site Safety Supervision; and

(viii) British Standard – Code of Practice for Falsework (BS 5975).

5. Design of temporary supports to stabilise the slopes and grounds during the demolition of retaining structures, basements and other geotechnical features shall refer to:

(i) Geotechnical Manual for Slopes; and

(ii) Guide to Retaining Wall Design, Geoguide 1.

6. Other Ordinances and Regulations:

(i) Dangerous Goods Ordinance;

(ii) Gas Safety (Registration of Gas Installers and Gas Contractors) Regulations;

(iii) Code of Practice on Avoiding Danger from Gas Pipes; and

(iv) Code of Practice for the Loading of Vehicles.

APPENDIX E

NOTIFICATIONS AND PROCEDURES

1. Asbestos Abatement Works

Prior to the collection of asbestos waste, the Environmental Protection Department must be notified in accordance with the Waste Disposal Ordinance. If asbestos abatement work is to be carried out in a building to be demolished, the owner of the premises must submit both an Asbestos Investigation Report and Asbestos Abatement Plan and a written notice of the date of commencement of asbestos abatement work to the EPD 28 days before the asbestos abatement work commences.

Factories and Industrial Undertakings (Asbestos) Regulation require the contractor to give a written notice to the Commissioner for Labour not less than 28 days before he begins an asbestos process. Before carrying out any work which may expose any worker to asbestos an adequate assessment of the likely exposure shall be made by a competent person, in accordance with the Factories and Industrial Undertaking (Asbestos) Regulation. The Registered Specialist Contractor (Demolition) shall also observe the aforesaid regulations and take appropriate preventive measures to prevent asbestos exposure and to protect the health of the workers engaged in the removal work.

2. Hoarding Permit

Prior to the demolition of the building structure, a hoarding permit shall be obtained from the Buildings Department for the installation of hoarding, covered walkways and any other temporary supporting structures outside the lot boundary. The hoarding permit would be issued after the review and approval of the Hoarding Plan submitted by the AP and RSE.

3. Excavation Permit

If the hoarding, covered walkway or any of the demolition related installation is to be installed on the public land, an Excavation Permit shall be required from the Highways Department. If required, the Excavation Permit shall be obtained before the installation of any precautionary measures.

4. Consent for the Demolition Works

A Demolition Plan together with a Stability Report including calculations shall be submitted to the Buildings Department for approval. Upon approval of the Demolition Plan, the Authorized Person shall submit a specified form applying for consent for demolition, together with

(i) a site safety supervision plan;
(ii) the names of Technically Competent Persons and their particulars;
(iii) the details of operators of powered mechanical plant or equipment proposed to be used;
(iv) the details of the debris disposal and management system; and
(v) the details of site engineer, if required to be appointed.

and the Buildings Department will consider issuance of the consent for the Demolition Work. Demolition may begin once the consent for demolition work is obtained. Prior to commencement of demolition work, the Authorized Person shall inform the Building Authority the appointment of a Registered Specialist Contractor (Demolition) using the specified Form BA10; and the Registered Specialist Contractor (Demolition) shall inform the public the appointment of a Technically Competent Person by posting the specified Form BA20 close to the front entrance of the site.

5. Notification for Commencement

Under the Air Pollution Controls (Construction Dust) Regulation, the principal contractor shall give notice to the EPD in a specified form with the specified particulars before the demolition work commences. If there is any proposed change to any of the particulars given in a previous notice, the principal contractor shall also notify the EPD before the proposed change takes effect.

6. Posting of Information

Prior to the commencement of demolition work, the Registered Specialist Contractor (Demolition) shall post the following information close to the front entrance of the site:

(A) the Hoarding Permit;

(B) the Excavation Permit;

(C) the Consent for Demolition;

(D) Form BA20 informing the Technically Competent Person in charge of the demolition work; and

(E) the contact telephone number of:

- the Authorized Person;
- the Registered Structural Engineer;
- the Registered Specialist Contractor (Demolition) or the person appointed to act for the contractor for the purposes of the Buildings Ordinance; and
- the Technically Competent Person in charge of the demolition site.

7. Demolition Activities within the "Restricted Hours"

No works involving the use of Powered Mechanical Equipment and/or Specified Powered Mechanical Equipment within restricted hours should be allowed without a valid Construction Noise Permit (CNP) issued by the EPD. The requirement shall be referred to the Technical Memorandum on Noise from Construction Work in Designated Areas. The restricted hours are defined as all day during 1900 to 0700 hours and general holidays, including Sunday, during 0700 to 1900 hours. The application of such a CNP has to be submitted to the Authority at least 28 days before the proposed commencement of any works to allow for the processing of the application. A CNP will be cancelled immediately if a breach against any of the conditions is found.

8. Discharge to the Waters of Hong Kong

If the work involves making a new discharge into the water of Hong Kong, application for a licence will be required under the Water Pollution Control Ordinance. The applicant should notify the public by publishing the application in an English and a Chinese Newspaper at his own expenses. The Director of Environmental Protection may grant a licence to the applicant not earlier than 40 days after the publishing of the notice and if no objection is received.

9. Notification for Completion

Upon completion of the demolition and the necessary required post-demolition works, the Buildings Department shall be notified in specified form for inspection and acceptance of the work. The Buildings Department will acknowledge the acceptance of the specified form upon satisfactory completion of the project.

10. Waste Disposal

The disposal requirements of construction and demolition waste at various landfills are listed in the following :

Waste Disposal Facilities provided by Government:-

Construction and demolition (C&D) waste with a small amount of inert material not exceeding 30% by weight

Disposal Site	**Opening Hours**
South-East New Territories Landfill Wan Po Road, Tseung Kwan O Enquiry - 2706 8888	0800 – 2300 including Sunday & Public Holiday
North-East New Territories Landfill Wo Keng Shan Road, Ta Kwu Ling Enquiry - 2674 6505	0800 – 1800 including Sunday & Public Holiday
West New Territories Landfill Lung Kwu Tan Road, Tuen Mun Enquiry - 2472 4382	0800 – 2000 including Sunday & Public Holiday

APPENDIX F

EXAMPLE OF DEMOLITION PLAN AND STABILITY REPORT FOR TOP DOWN MANUAL METHOD

1. DEMOLITION PLAN

1.1 The demolition plan shall consist of the following plans

1.1.1 Fig F.1 Site Plan and Adjoining Site Conditions.

1.1.2 Fig F.2 Typical Floor Plan and Existing Building Information.

1.1.3 Fig F.3 Elevation A.

1.1.4 Fig F.4 Demolition procedure and sequence.

1.1.5 Fig F.5 Precautionary Measures.

1.1.6 Fig F.6 Typical Support at Cantilever.

1.1.7 Fig F.7 Typical detail for Party Wall Strengthening.

1.2 In the case of sloping ground, the following additional plans are required :

1.2.1 Plan showing adjoining slopes, buildings, structures, utilities that may be affected by the demolition.

1.2.2 Sections Showing the slopes etc.

1.2.3 Supports to slopes, buildings etc. at each stage of demolition.

2 STABILITY REPORT

2.1 The Stability Report of this project shall consist of the following :

2.1.1 A Stability report to justify the safety of the existing building during all phases of demolition.

2.1.2 A structural check with calculation on the support of the cantilevered slab between gridlines A and B.

2.1.3 A structural check with calculation on the hoarding, covered walkway and catch platform.

2.1.4 A structural check with calculation on the strengthening of the Party Wall.

2.2 In the case of a sloping site, the Stability Report shall include the following :-

2.2.1 Stability check of the adjoining slopes, buildings, structures and utility which may be affected by the demolition, with supporting calculations.

2.2.2 Optional Structural and Geotechnical checks on any remedial measures to strengthen the slope.

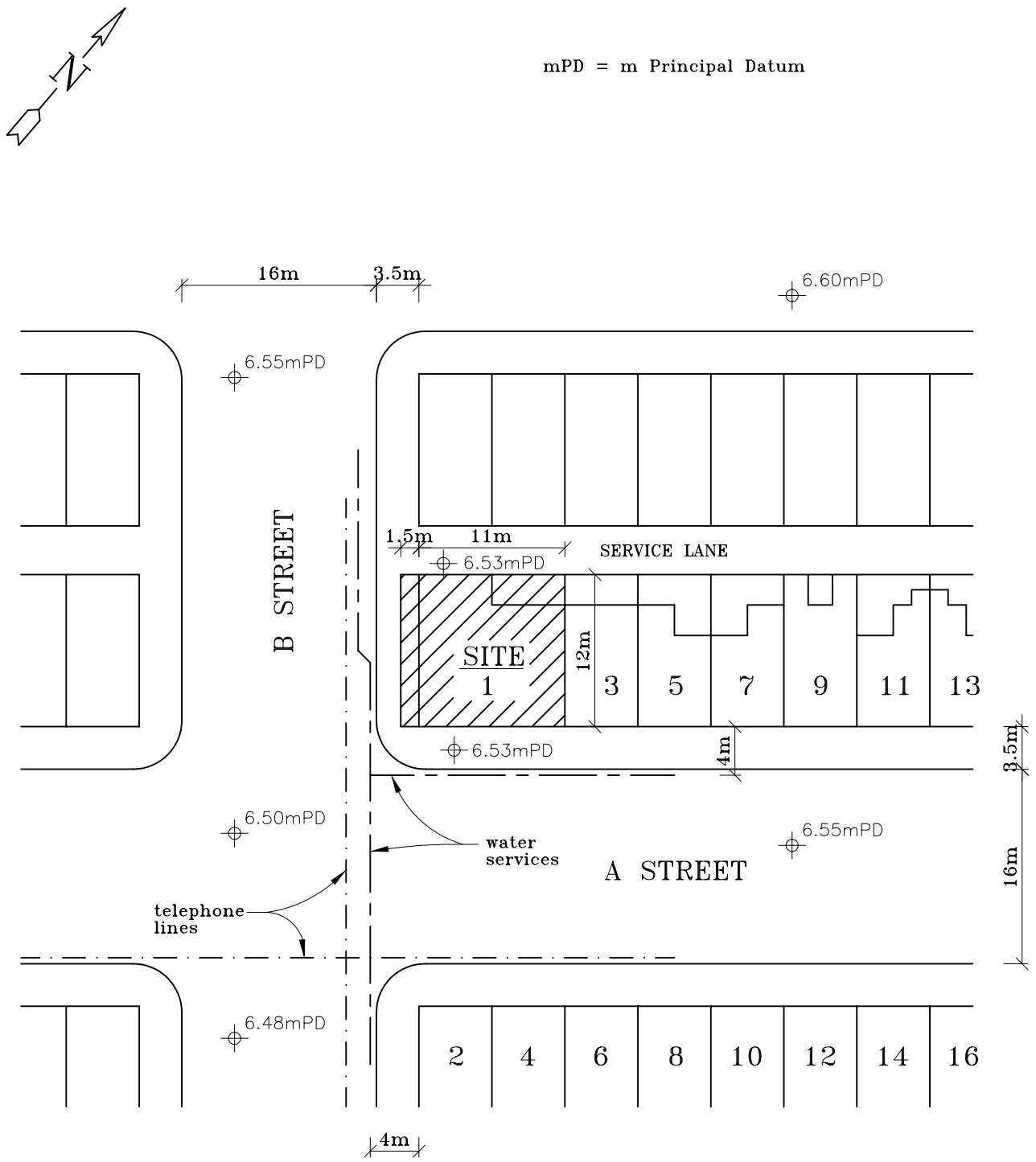

SITE LOCATION PLAN (SCALE 1:500)

FIGURE F.1 SITE PLAN AND ADJOINING SITE CONDITIONS – 1, A STREET (SHEET 1 OF 2)

GENERAL NOTES:

1. The building to be demolished is No. 1, A street. Detailed information of this building is shown on Fig. F.2 and F.3.
2. General information of No. 1, A street are as follows :
   - 2.1 The site is outside all scheduled areas defined in Buildings Ordinance,
   - 2.2 The site is outside the scope of Schedule 2 of the Environmental Impact Assessment Ordinance,
   - 2.3 Site area : 11m x 12m
   - 2.4 Boundary conditions:
     - North : A 2 m wide service lane separated the project building from the adjacent building,
     - East : The project building is directly adjoining an adjacent building at No. 3, A street,
     - South : The building abuts A street,
     - West : The building abuts B street,
   - 2.5 Topography : Flat, no slope or retaining wall within the vicinity of the site,
   - 2.6 Traffic conditions : Moderate traffic on both A street and B street,
   - 2.7 No antiques, historical monument or special feature required protections.
3. Adjacent utilities which may be affected by demolition :
   - 3.1 There are no above ground cable or wire.
   - 3.2 There are water services, underground telephone and electric services along A street and B street The closest utility services is about 4 m from the building line. Therefore, the demolition of the building will not affect these underground utilities.
4. Adjacent buildings :
   - 4.1 Structural and general information :
     The structure at No. 3, A street adjoins the project building is also built in the 1960. It is a 4-storey high reinforced concrete building with conventional frames, slabs and pile foundation.
   - 4.2 Conditions :
     The building appears to be in good structural condition with no major cracks or structure deterioration. Except for the party wall, the demolition process should not have any significant impact on the structure of the adjacent building.
   - 4.3 Party wall and common features :
     - (A) Party wall :
       - (i) There is a 4-storey high party wall between the premises and the building at No. 3, A street,
       - (ii) The party wall is of brick construction. The thickness of the wall is 450 mm (18") at the ground floor and 350 mm (14") at 1 st floor and above,
       - (iii) Party wall between the premises and No. 3, A street will require strengthening during the demolition process.
     - (B) Common features :
       There are no other elements such as shared staircases, unauthorised building, overhead cables or wires or shared services that would be affected by the proposed demolition.
5. The Authorized Person shall submit the following documents to the Buildings Department prior to or at the time of consent application:-
   - (i) a site safety supervision plan,
   - (ii) the names of Technically Competent Persons and their particulars,
   - (iii) the details of operators of powered mechanical plant or equipment proposed to be used,
   - (iv) the details of the debris disposal and management system, and
   - (v) the details of site engineer.

FIGURE F.1 SITE PLAN AND ADJOINING SITE CONDITIONS – 1, A STREET (SHEET 2 OF 2)

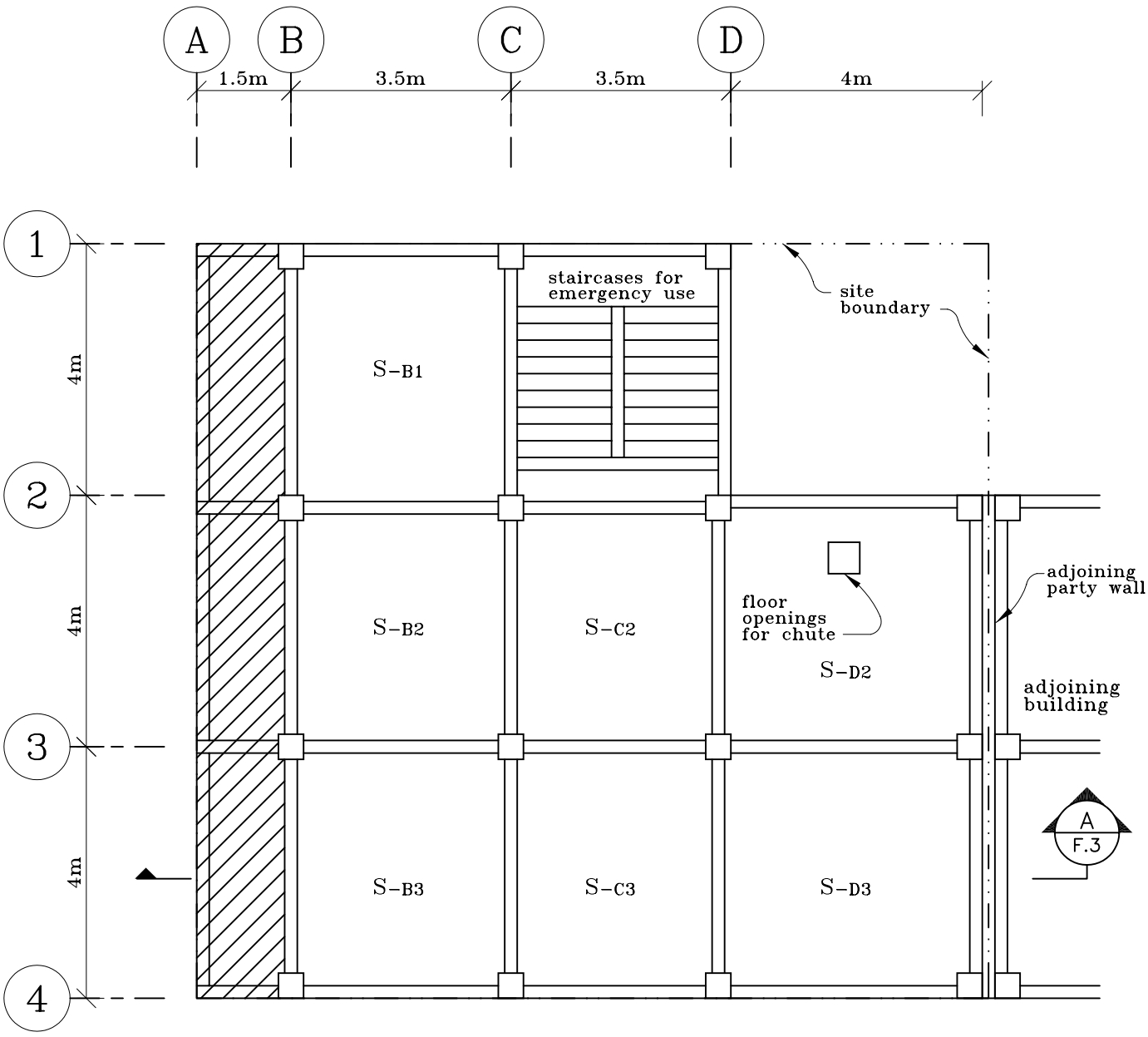

LEGEND :

cantilevered balconies

FIGURE F.2 TYPICAL FLOOR PLAN AND EXISTING BUILDING INFORMATION – 1, A STREET (SHEET 1 OF 2)

NOTES ON EXISTING BUILDING:

1. General information and dimensions
   - 1.1 Age : Over 30 years (built in 1960's)
   - 1.2 Use : Residential
   - 1.3 Building cover area : 12.5m x 12m
   - 1.4 Building height : 23.5m, 6 storeys
   - 1.5 Floor height : Ground floor is 3.8 m with a 2.2 m mezzanine; 1 st floor and above are 3.5 m.

   Typical floor plan is shown on Fig. F.2. Elevation of the Building is shown on Fig. F.3.

2. Structural conditions
   - 2.1 Structure :
     The structure consists of reinforced concrete frames with conventional column, beams and slabs. Both exterior and interior walls have in-fill bricks. The building is founded on a pile foundation.
   - 2.2 Conditions :
     The building is currently vacant and has been maintained in a satisfactory condition. Based on our site inspection, the building shows no sign of any significant structural damage or deterioration Only minor cracks to the non-structural brick walls were observed.

3. Special structural features
   - 3.1 The building consists of cantilevered slabs and beams along the frontage of A street. No other unconventional structures as listed in section 2.1.3(A)3 in the Code of Practice for Demolition of Buildings were found.

4. Hazardous materials
   - 4.1 An Asbestos Investigation Report (AIR) will be conducted by a registered asbestos consultant. If asbestos containing material is found to be inside the building, an Asbestos Abatement Plan (AAP) will be submitted to the Environmental Protection Department 28 days before the asbestos abatement work commences. The asbestos abatement works shall be performed in accordance with the Air Pollution Control Ordinance and the Factoried and the Factories and Industrial Undertaking (asbestos) Regulations. The AIR and AAP will be submitted to the EPD directly.

FIGURE F.2 TYPICAL FLOOR PLAN AND EXISTING BUILDING INFORMATION – 1, A STREET (SHEET 2 OF 2)

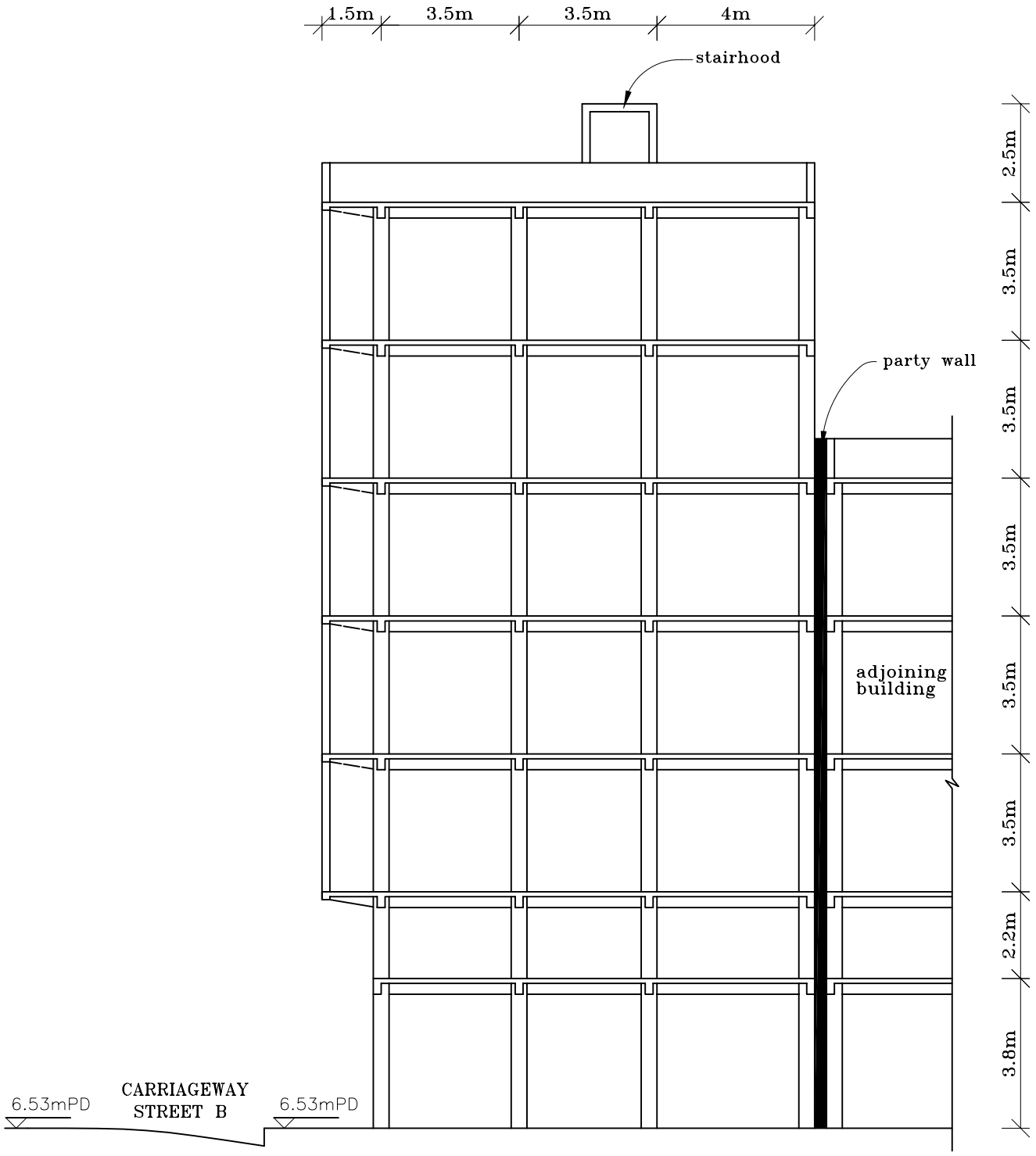

mPD = m Principal Datum

FIGURE F.3 ELEVATION A – 1, A STREET

DEMOLITION PROCEDURES:

1. General
   1.1 Demolition shall be carried out by hand operated pneumatic jack hammer. Weight of the jack hammer shall be not more than 50 kg. Oxy-acetylene torch may be used to cut the reinforcement. Mobile air compressor shall be placed on ground floor,
   1.2 Demolition shall begin on the roof and proceed down floor by floor to the ground floor. The concrete of each structural element shall be broken down gradually. The reinforcement shall be left in place until the concrete is broken away and when its support is no longer need,
   1.3 The demolition of each structural element shall be performed according to the following :
      (i) Cantilevered slabs shall be demolished by hand held jack or pneumatic hammer; prior to such demolition, the cantilevered slab shall be supported and the area underneath it be protected according to the precautionary measures in item 2 on page F14. Demolition of cantilevered slab shall be as shown on the drawing (The drawing shall include details similar to Fig. 4.1 & 4.2 in this Code of Practice),
      (ii) The cantilevered beams shall be demolished by hand held jack or pneumatic hammer; the cantilevered beam shall not be demolished prior to demolition of slabs and walls which are supported by the cantilevered beams,
      (iii) Demolition of other slabs shall be as shown on the drawing (The drawing shall include details similar to Fig. 4.8 in the Code of Practice),
      (iv) Interior beams shall be demolished as shown on the drawing (The drawing shall include details similar to Fig. 4.9 & 4.10 in the Code of Practice),
      (v) Interior columns shall be demolished as shown on the drawing (The drawing shall include details similar to Fig. 4.5 in the Code of Practice).

2. Demolition sequence
   2.1 Demolition of roof floor :
      (i) The parapets, the stairhood and other structures above roof floor level shall be demolished,
      (ii) The exterior walls linking the cantilevered structure shall then be demolished, followed by cantilevered roof slabs and beams,
      (iii) The remaining roof slabs and beams shall follow. The reinforcing bar of the beams connecting the exterior walls to the interior columns shall remain until the demolition of exterior wall.
   2.2 Demolition of 5th and 4th floor :
      (i) External brick in-fill walls shall be removed manually before demolition of the concrete cross beams and frames. The brick shall be pushed in from outside, beginning from the top layer down,
      (ii) The external frames and walls shall be demolished with tie wires as illustrated on the drawing (The drawing shall include details similar to Fig. 4.3, 4.4, 4.5, 4.6 and 4.7 in the Code of Practice),
      (iii) R.C. columns and any remaining beams on the floor shall be demolished,
      (iv) The exterior walls linking the cantilevered structure shall then be demolished, followed by the cantilevered slabs and beams,
      (v) Demolition of the remaining slabs and beams shall follow.
   2.3 Demolition of 3rd floor and subsequent floors below 3rd floor :
      (i) The procedures as stated in 2.2 shall be repeated for demolition down to ground floor,
      (ii) The party wall between the premises and No. 3, A street shall be strengthened by steel channels as shown Fig. F.7. Strengthening of the party wall shall be carried out as demolition work progress. The maximum height of the unstrengthened party wall shall not exceed one storey height or 3500mm, whichever is the less,
      (iii) Demolition of the floor below shall not be proceeded until the party wall on the prevailing floor has been strengthened,
      (iv) The ground floor slab shall be demolished.

FIGURE F.4 DEMOLITION PROCEDURE AND SEQUENCE (SHEET 1 OF 4)

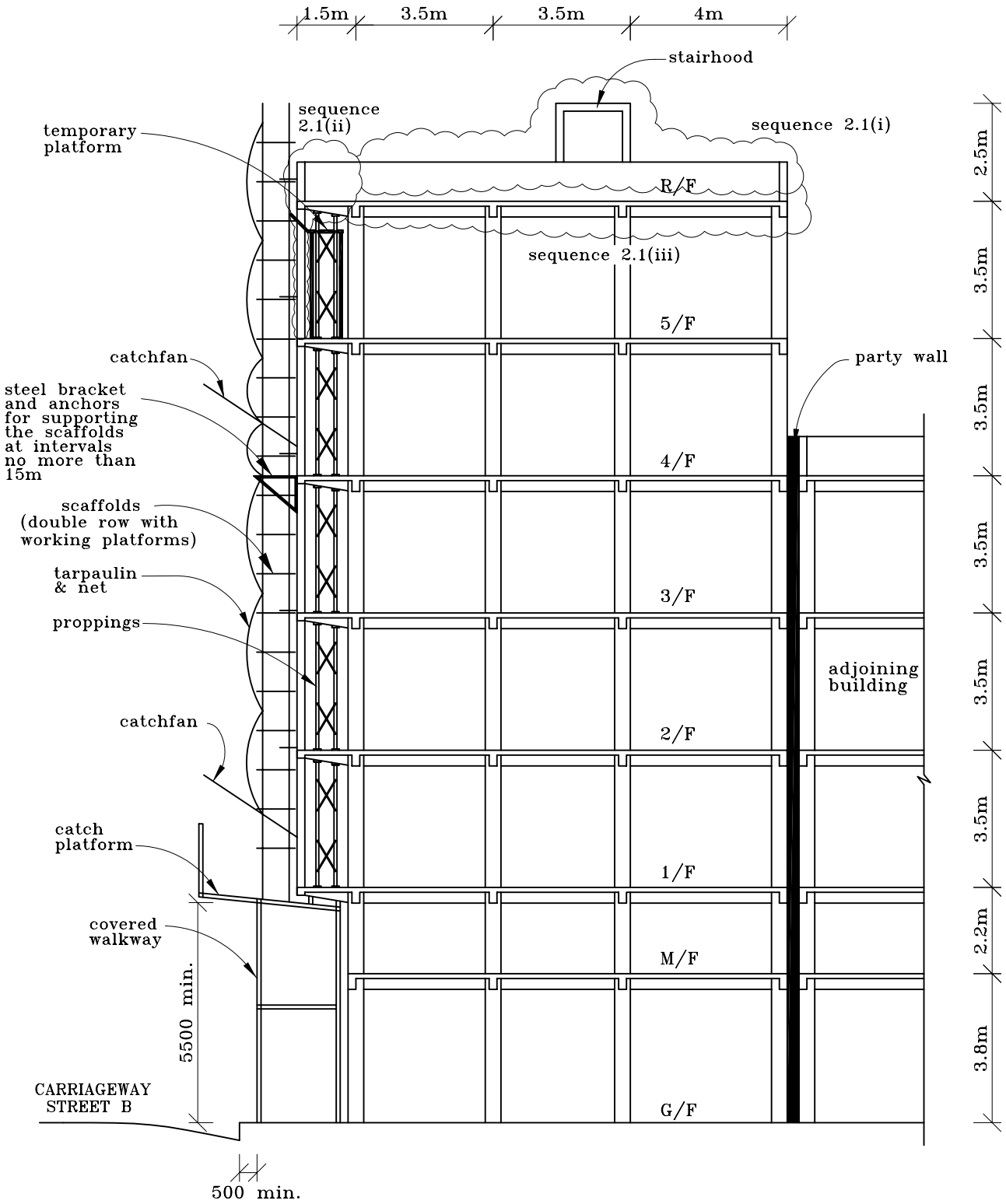

FIGURE F.4 DEMOLITION PROCEDURE AND SEQUENCE (SHEET 2 OF 4)

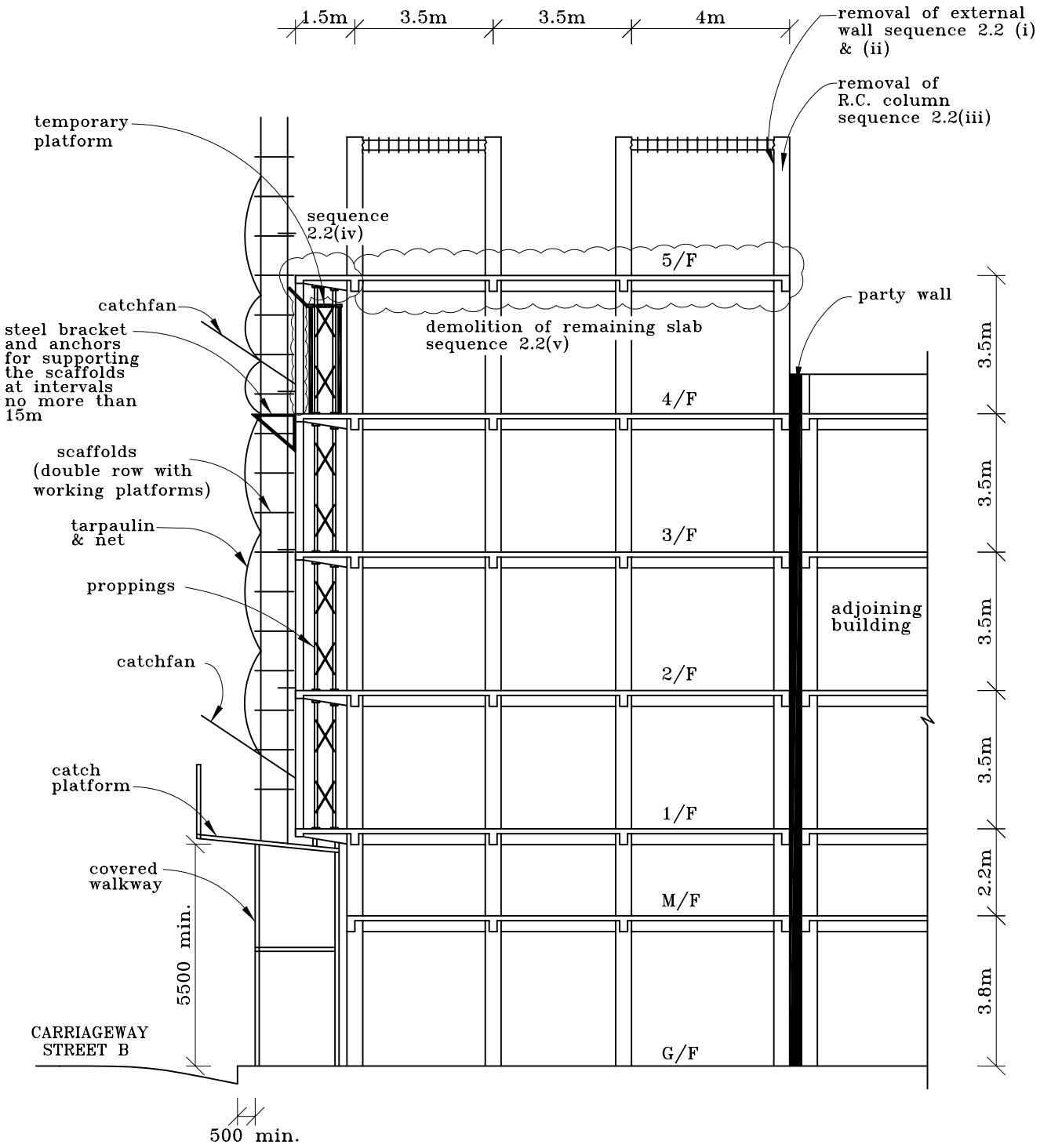

FIGURE F.4 DEMOLITION PROCEDURE AND SEQUENCE (SHEET 3 OF 4)

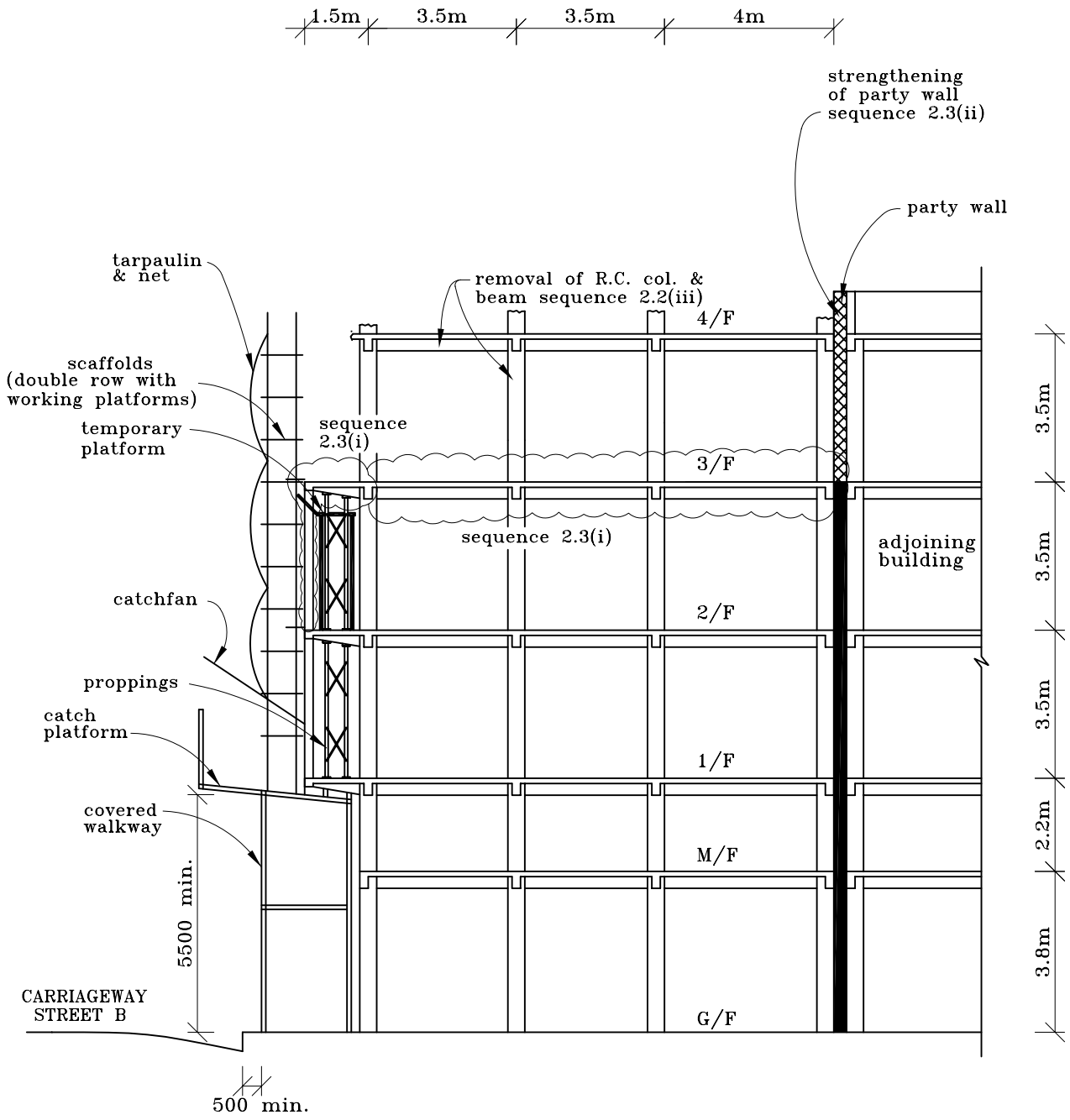

FIGURE F.4 DEMOLITION PROCEDURE AND SEQUENCE (SHEET 4 OF 4)

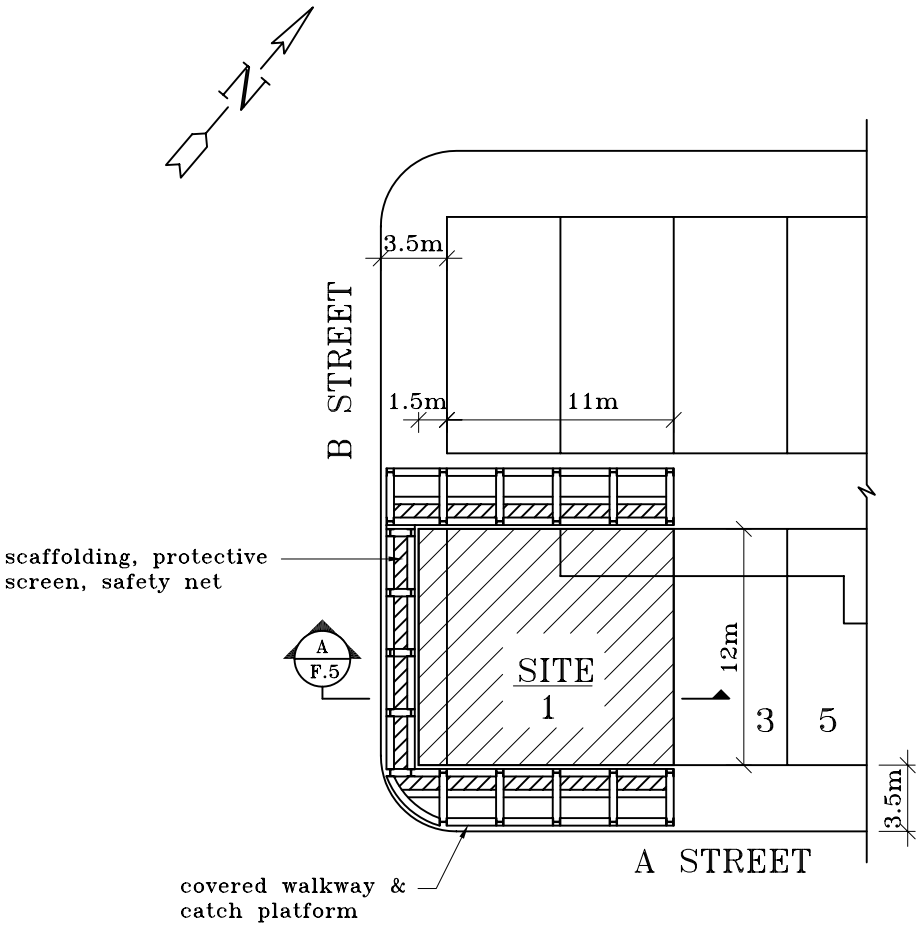

HOARDING PLAN

(DETAILS OF HOARDING, COVERED WALKWAY, CATCH PLATFORM SIMILAR TO FIG. 3.2, 3.3 SHALL BE SHOWN ON THIS DRAWING)

FIGURE F.5 PRECAUTIONARY MEASURES (SHEET 1 OF 4)

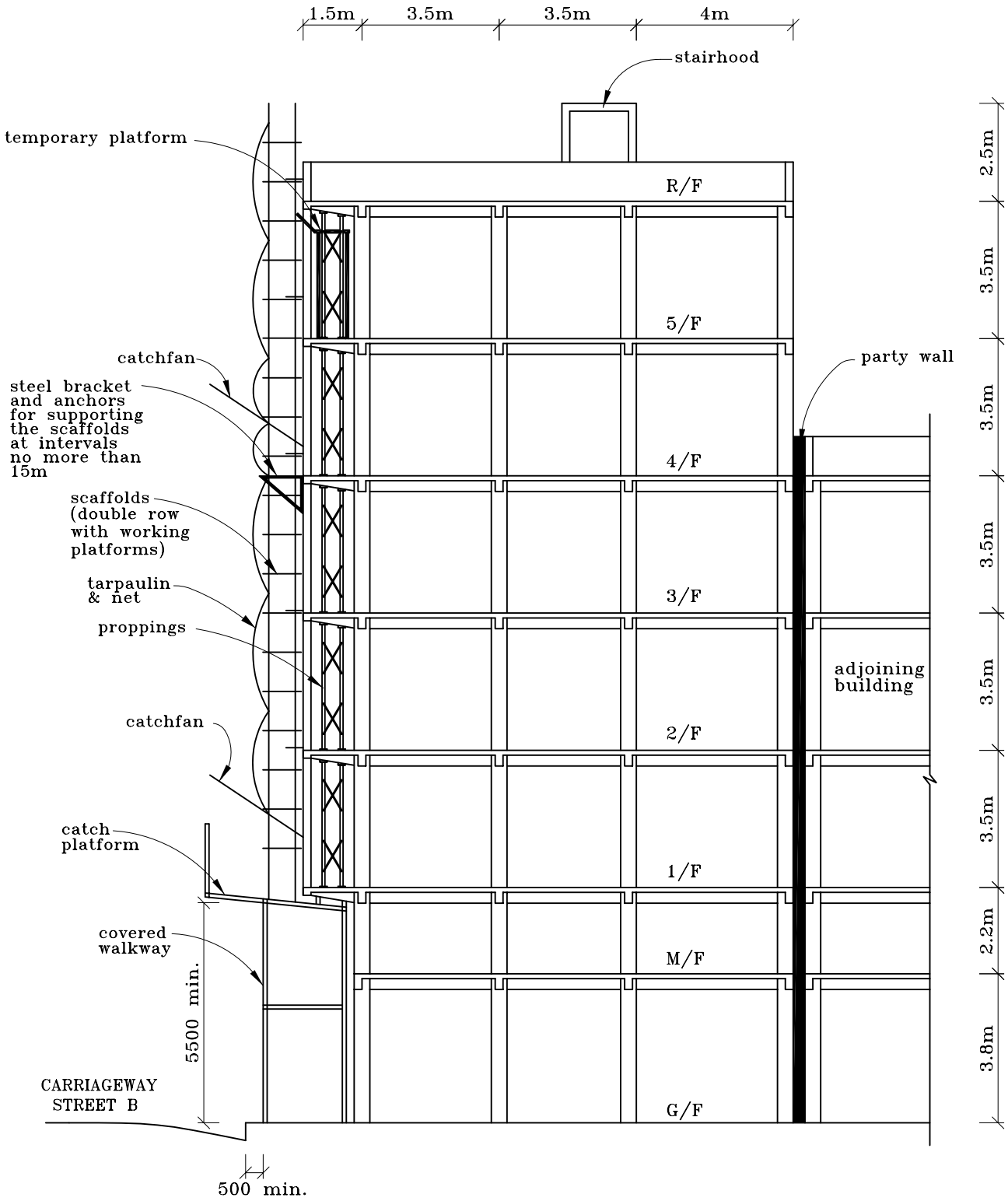

FIGURE F.5 ELEVATION A – PRECAUTIONARY MEASURES (SHEET 2 OF 4)

PRECAUTIONARY MEASURES:

Prior to demolition, the following precautionary measures shall be taken :

1. Covered walkway and catch platform
   The covered walkway and catch platform shall be constructed in accordance with the plans and conditions accompanied by the hoarding permit. The covered walkway shall cover the entire length of the property boundaries along A street, B street and the service lane. The foundation for the covered walkway shall be carefully excavated by hand tools to ensure no damage to the existing underground utilities. The conditions accompanied by the excavation permit imposed by the Highways Department will be complied with.
2. Temporary support
   The catch platform on top of the covered walkway shall be placed underneath the balconies to support the cantilevered structures. Steel propping shall be installed on all floors underneath the cantilevered slabs and beams. Steel propping shall have a bearing capacity of 25 kN, spaced at 1.2 m on centre. The props shall be braced with lateral restraints. The area underneath each external cantilevered structure to be demolished shall be protected by a temporary platform.
3. Scaffolds, working platforms, screens and catchfans
   3.1 Double row scaffold with nets and tarpaulin shall be installed and shall cover the external face of the building,
   3.2 Bamboo catchfans shall be provided at vertical intervals of no more than 10 m,
   3.3 The scaffolds, working platforms, catchfans, nets and tarpaulin installation shall be in accordnace with the Code of Practice for Demolition of Buildings and the codes of practice on scaffolding safety.
4. Existing utilities
   All existing utilities shall be terminated. Sewer service and drainage connections shall be properly disconnected and sealed off at the last manhole.
5. Debris handling
   5.1 Any existing furniture, wood floors, door frames, windows, piping and other building services shall be removed. Any salvageable material will be sorted and removed separately,
   5.2 Building debris shall be conveyed through a 800mm x 800mm opening on the floor slabs at location as shown on the typical floor plan. Openings shall not cut through structural support elements. Plastic chute shall be erected through the openings to convey the debris to the ground floor,
   5.3 Demolition debris shall be picked up on ground floor with bull dozer and carried away by dump trucks. Approximate 90 m^3 of building debris will be produced from demolition of each floor. Debris clearing and transportation shall be scheduled to maintain the following conditions :
   (A) Debris accumulation on the first floor or above shall not be higher than 100mm,
   (B) Debris accumulation on the ground floor shall not exceed 1 m,
   (C) No. debris shall be allowed to accumulate on the cantilevered structures,
   Structural justification of the debris accumulation is included in Attachment B.
   5.4 The floor slabs S-D2 and S-D3 of the mezzanine shall be removed to provide the required height for the debris loading operation and truck passage. The removal of two mezzanine floor slabs would not affect the stability of the remaining structure. The structural checking for the slabs removal is included in Attachment B.
   5.5 Details of debris disposal and management system shall be submitted to BD prior to consent application as per the requirements in PNAP 268.
6. Special site safety
   6.1 Emergency exit
   The existing staircase shall be used as emergency route. The emergency route shall be maintained throughout the demolition process. The route shall be clear of obstruction at all time. Signs or markings shall be installed to clearly identify the route.
   6.2 Fire Prevention
   (A) Fire extinguisher or fire fighting equipment shall be placed in a visible location, adjacent to the staircase, on each floor,
   (B) All flammable materials shall be stored in a safe location.

FIGURE F.5 PRECAUTIONARY MEASURES (SHEET 3 OF 4)

PRECAUTIONARY MEASURES:

6.3 Dust and noise
(A) Water spraying shall be applied to suppress the dust generated during the demolition operation and debris hauling,
(B) Super silenced type air compressor shall be used. Demolition works shall not be performed within the restricted hours from 1900 hrs. to 0700 hrs. all day and from 0700 hrs. to 1900 hrs. on general holidays including SUNDAY.

6.4 Training
All site personnel shall go through a training programme to understand the project and site safety requirements. The training programme shall be conducted by a competent trainer. The training programme shall include the following :
(A) An Induction course at the beginning of the job to circulate information on the proposed method and required safety measures to perform the work,
(B) Daily safety meetings to maintain and reinforce the safety concept.

6.5 Typhoon
In the case when Typhoon Signal No. 3 is hoisted, the Contractor shall inspect all scaffolding, protective screen, and externally exposed temporary work and strengthen any loose connections. After the typhoon, all scaffoldings, protective screens and externally exposed temporary works shall be inspected and confirmed to be safe by the competent and experienced person.

7. Maintenance and inspection
7.1 All the precautionary measures, covered walkway, catch platforms, catchfans and temporary supports shall be inspected by the representatives of the AP and RSE on a weekly basis and the contractor on a daily basis. Any accumulation of building debris on the catchfans and catch platforms shall be removed. Any deficiency shall be repaired when found necessary. The inspection and repair records shall be provided to the AP and RSE.
7.2 Before leaving the job site each day, the contractor shall identify and rectify any unsafe conditions such as partially demolished structural elements and damaged temporary supports.
7.3 The scaffolding shall be inspected and maintained in accordance with the codes of practice on scaffolding safety and the Construction Site (Safety) Regulations by the contractor.

8. Emergency plan
8.1 Emergency telephone numbers shall be clearly displayed in a conspicuous location. In the event of any emergency or accident, the contractor shall notify the Police and Fire Services Department for assistance. The contractor shall also notify the AP and RSE immediately.
8.2 At the initial warning of a typhoon or a major storm event, the following shall be performed :
8.2.1 Contractor shall secure all scaffold, screen, temporary supports and loose elements on site. The scaffold shall be taken down to the prevailing top level of the building,
8.2.2 All flammable materials, oxygen and acetylene bottles shall be removed or secured in a safe location.
8.2.3 No unstable and/or partially demolished structural elements shall be left on site. If this is unavoidable, the unstable structure shall be braced and secured.

9. Post demolition
9.1 Upon completion of the demolition, the site shall be levelled and cleared of debris.
9.2 In the case of no immediate redevelopment, the site boundary shall be completely enclosed to prevent public access.
9.3 Arrangement shall be made for permanent treatment of the party wall.
9.4 Damage to pavement, footpath and other elements within the right of way shall be repaired to its original condition prior to the completion of the demolition project.

FIGURE F.5 PRECAUTIONARY MEASURES (SHEET 4 OF 4)

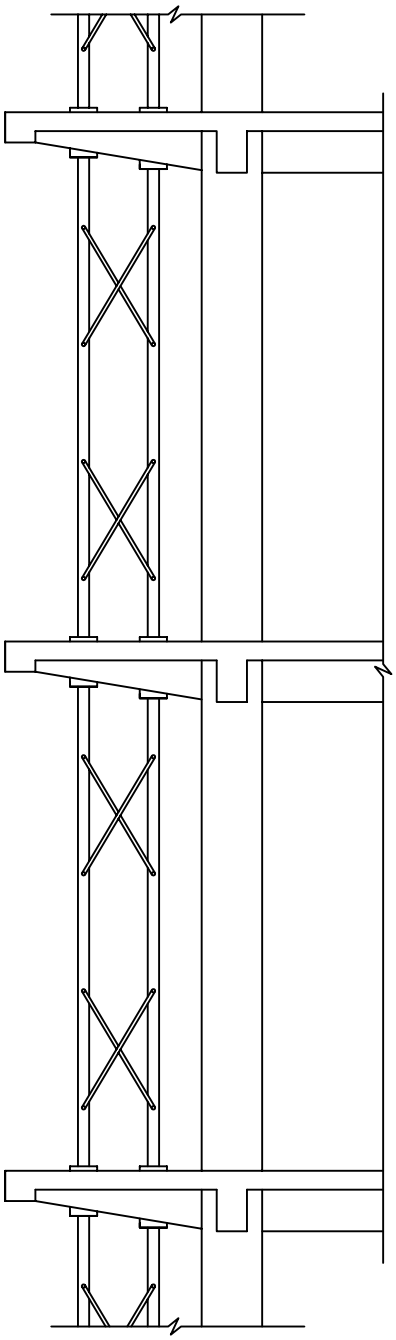

SECTION A
1:50

TYPICAL SECTION AT CANTILEVER

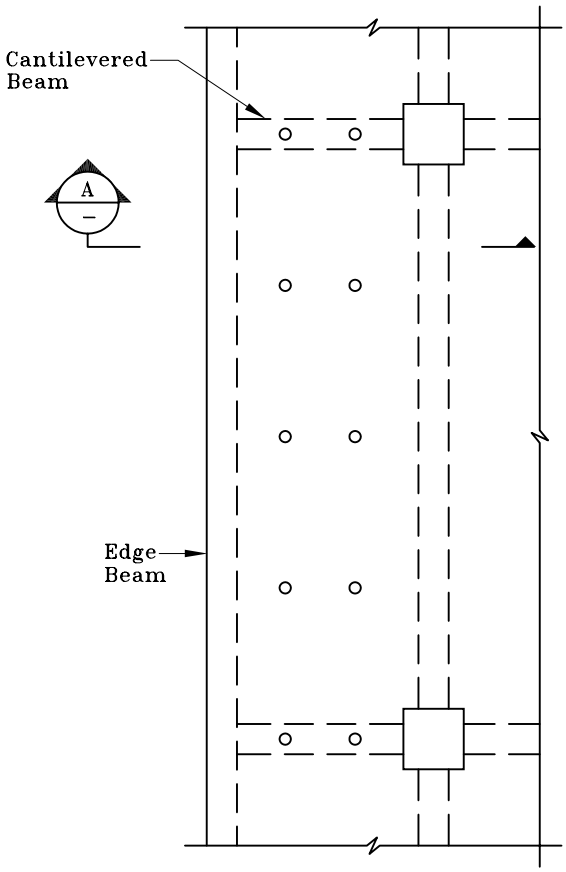

TYPICAL PLAN AT CANTILEVER
(MIN. SUPPORT CAPACITY = 25 kN/LEG)

FIGURE F.6 TYPICAL SUPPORT AT CANTILEVER

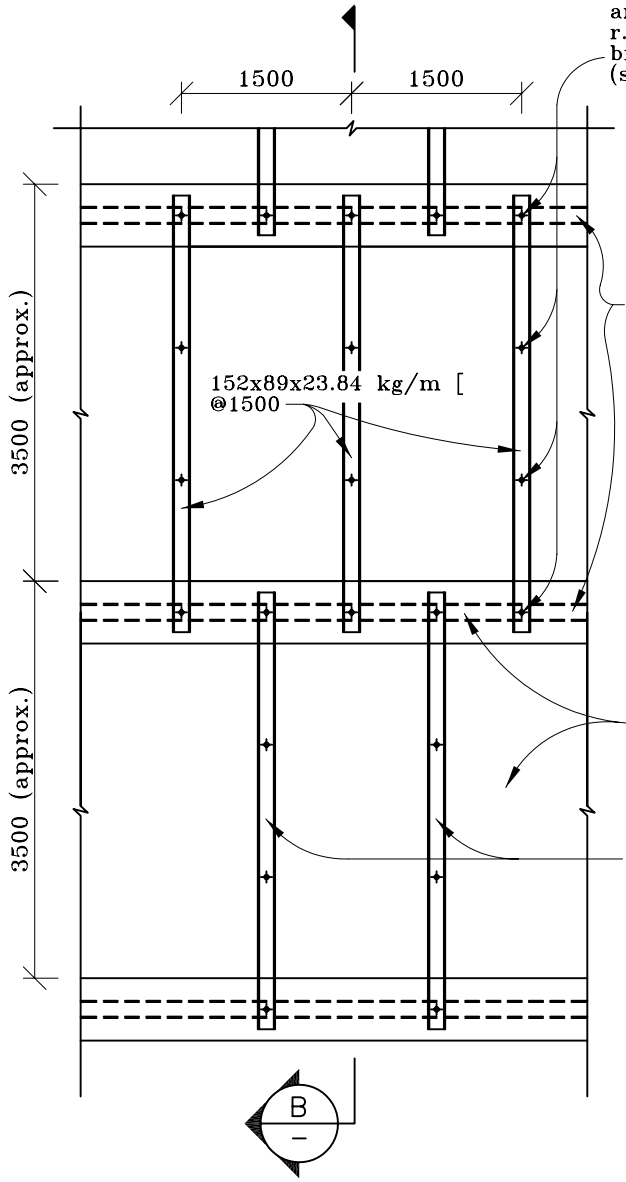

TYPICAL DETAIL FOR PARTY WALL STRENGTHENING

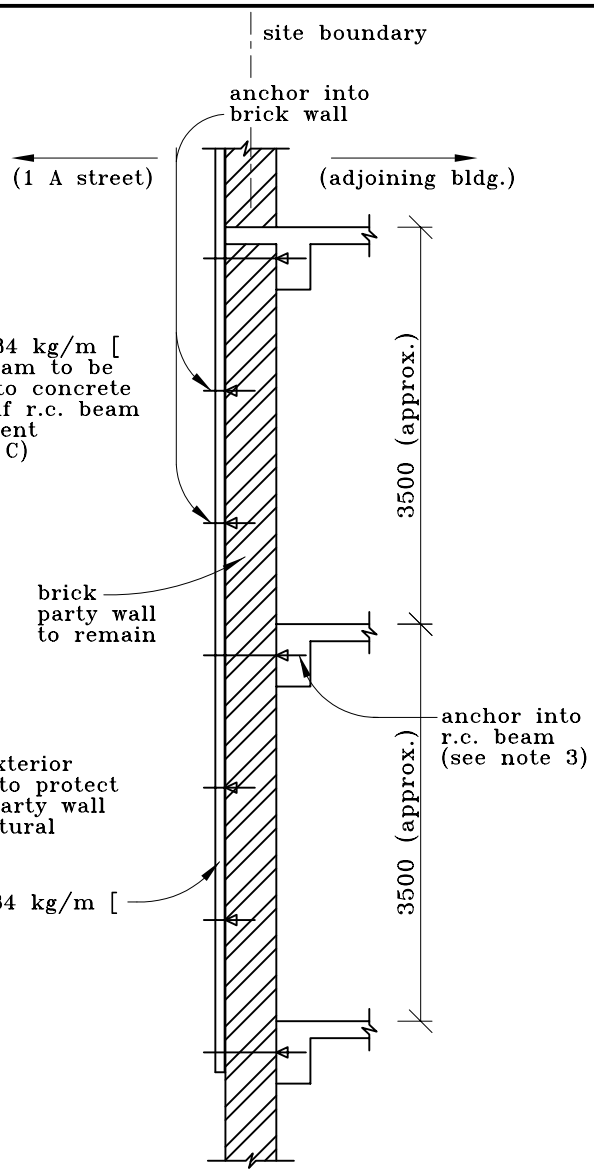

SECTION B

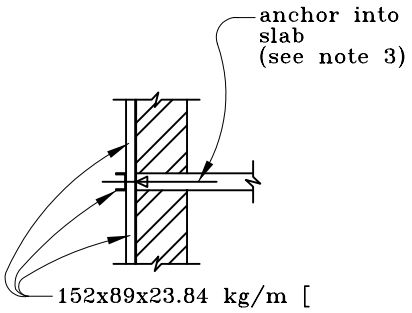

DETAIL C

NOTES :

1. The max. height of unstrengthened party wall shall not exceed one storey height of 3500.
2. Cement exterior finishing shall be applied in two coats :
   (i) The first coat shall have a minimum thickness of 10mm with a cement-lime-sand mix ratio of 1:2:6.
   (ii) The second coat shall have a minimum thickness of 10mm with a cement-lime-sand mix ratio of 1:3:6.
3. Anchor with adequate strength shall be designed by RSE.

FIGURE F.7 TYPICAL DETAIL FOR PARTY WALL STRENGTHENING

APPENDIX G

EXAMPLE OF DEMOLITION PLAN AND STABILITY REPORT FOR TOP DOWN METHOD BY MACHINES

1. Demolition Plan

1.1 The demolition plan shall consist of the following plans :

1.1.1 Fig G.1 Site Plan and Adjoining Site Conditions.

1.1.2 Fig G.2 Typical Floor Plan and Existing Building Information.

1.1.3 Fig G.3 Elevation A

1.1.4 Fig G.4 Demolition procedure and sequence

1.1.5 Fig G.5 Precautionary Measures

1.1.6 Fig G.6 Typical Support (This drawing is not shown, it is similar to Fig F.6 in Appendix F)

2.0 Stability Report

2.1 The stability report of this project shall consist of the following :

2.1.1 A stability report to justify the safety of the existing building during all phases of demolition.

2.1.2 A structural check with calculation on the support of cantilevered slab and beams between gridlines 5 and 6.

2.1.3 A structural check with calculation on the support to typical floors catering for the loading due to powered mechanical plants.

2.1.4 A structural check with calculation on the temporary ramp design to allow the descending of the machines.

2.1.5 A stability report with calculation to justify the safety of lifting of the machine to the roof.

2.1.6 A structural check with calculation on its hoarding, covered walkway, and catch platform.

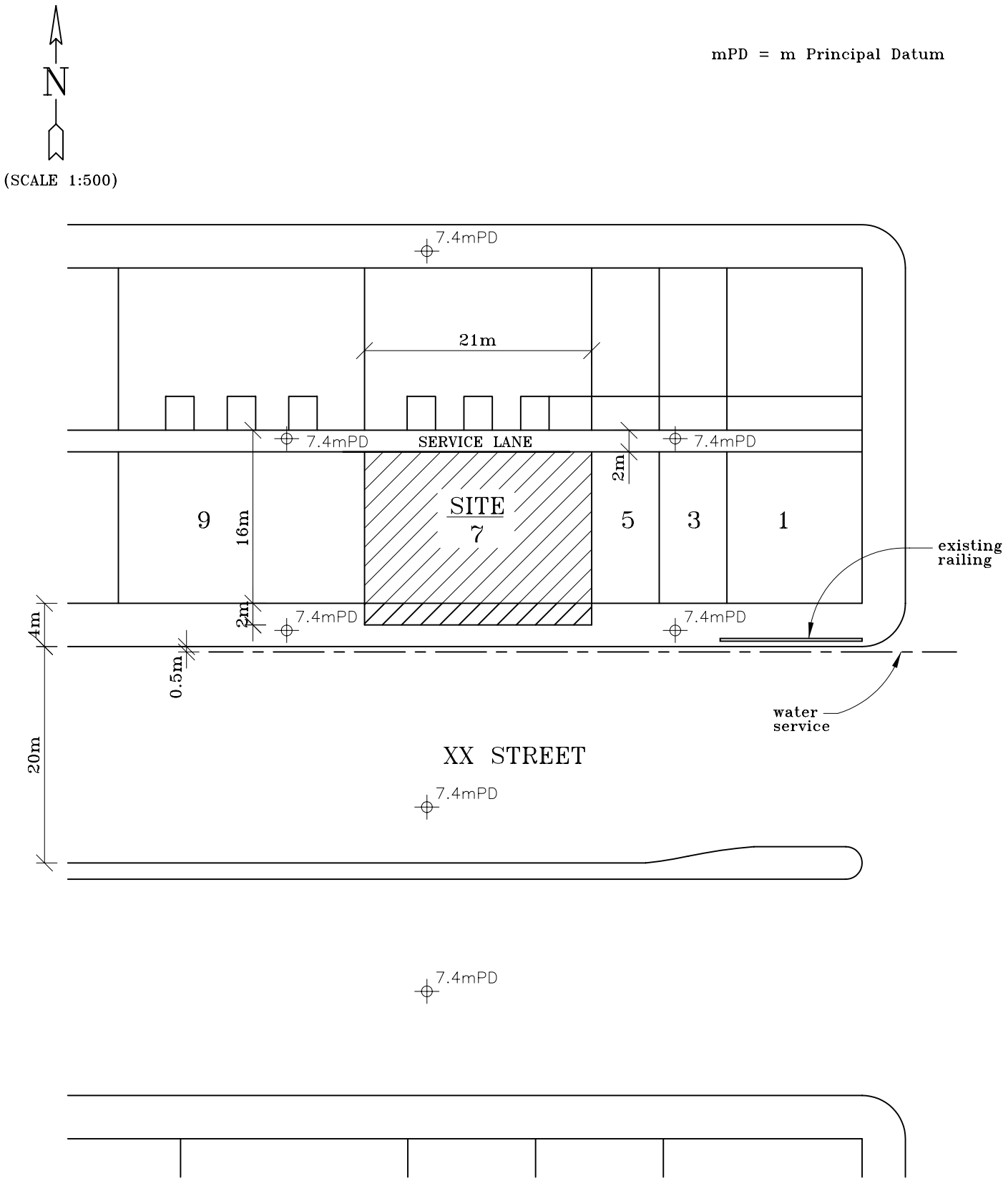

FIGURE G.1 SITE PLAN AND ADJOINING SITE CONDITIONS – 7, XX STREET (SHEET 1 OF 2)

GENERAL NOTES:

1. The building to be demolished is No. 7, XX street. Detailed information of this building is shown on Fig. G.2 and G.3.
2. General information of No. 7, XX street are as follows :
   - 2.1 The site is outside all scheduled areas defined in the Buildings Ordinance,
   - 2.2 The site is outside the scope of Schedule 2 of the Environmental Impact Assessment Ordinance,
   - 2.3 Site area : 21m x 16m
   - 2.4 Boundary conditions:
     - North : A 2 m wide service lane separated the project building from the adjacent building,
     - East : Adjoining adjacent building with independent external wall,
     - South : The building abuts XX street,
     - West : Adjoining adjacent building with independent external wall,
   - 2.5 Topography : Flat, no slope or retaining wall in the vicinity of the site,
   - 2.6 Traffic conditions : Moderate to heavy traffic on XX street,
   - 2.7 No antiques, historical monument or special feature required protection.
3. Adjacent utilities :
   - 3.1 There are no above ground utilities or street furniture adjacent to the site,
   - 3.2 Underground utilities including telephone cable, water and sewer services that run along XX street,
   - 3.3 The closest utility is the telephone cable that is located along XX street, approximately 4.5 m from the building.
4. Adjacent buildings :
   - 4.1 General and structural information :
     The adjacent buildings are about 30 years old and consist of conventional reinforced concrete framing on pile foundation,
   - 4.2 Structural conditions :
     No significant deterioration or damage to the structural element or significant foundation settlement were observed. These adjacent buildings appear to be properly maintained and would not be adversely affected by the demolition of the project building,
   - 4.3 Party wall and common features :
     The adjacent buildings have an independent external wall. There are physical separations between the premises and the adjacent buildings. There is no common party wall or share structure between the buildings.
5. The Authorized Person shall submit the following documents to the Buildings Department prior to or at the time of consent application:–
   - (i) a site safety supervision plan,
   - (ii) the names of Technically Competent Persons and their particulars,
   - (iii) the details of operators of powered mechanical plant or equipment proposed to be used,
   - (iv) the details of the debris disposal and management system, and
   - (v) the details of site engineer.

FIGURE G.1 SITE PLAN AND ADJOINING SITE CONDITIONS – 7, XX STREET (SHEET 2 OF 2)

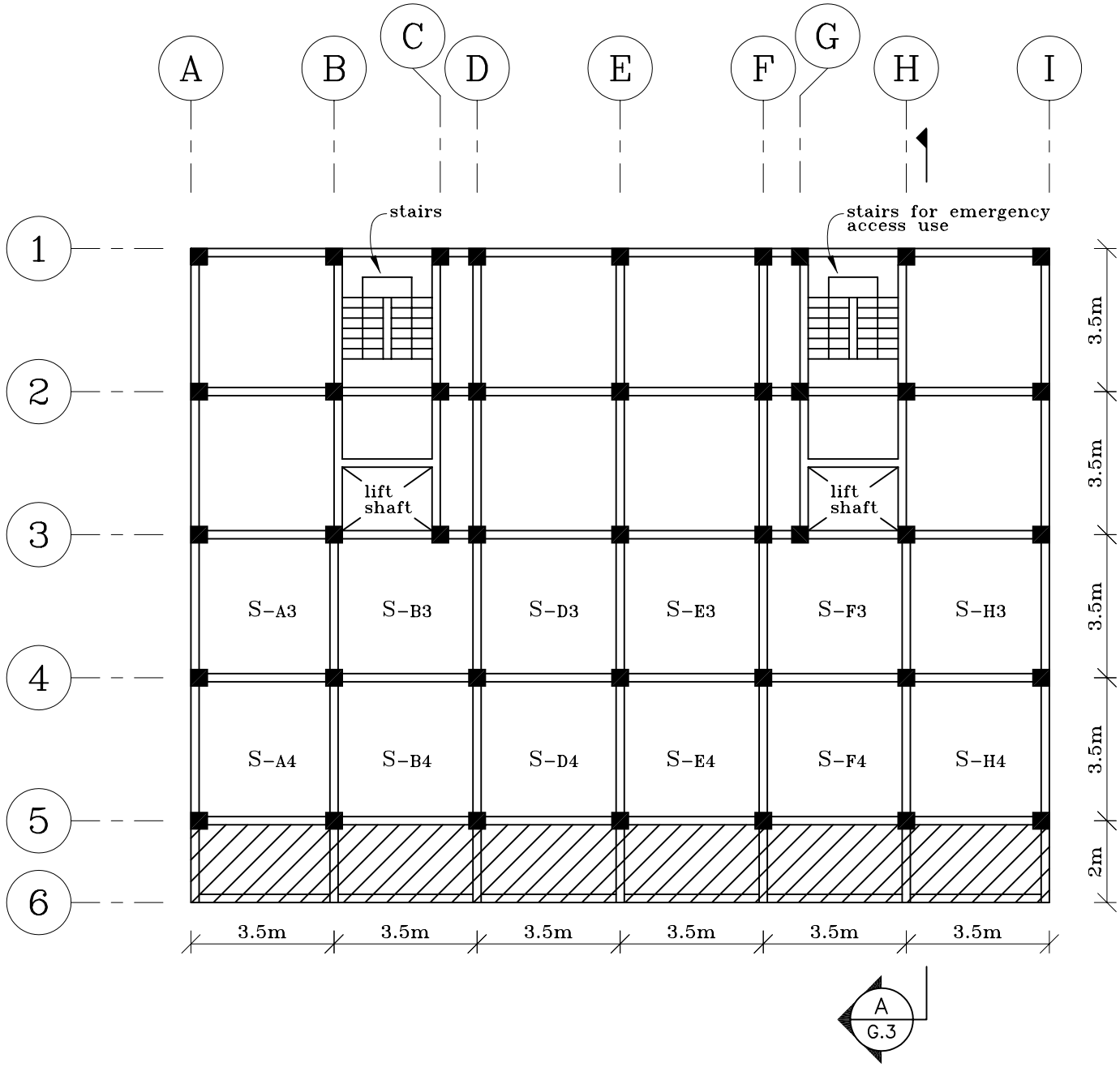

LEGEND :

cantilevered balconies

FIGURE G.2 TYPICAL FLOOR PLAN AND EXISTING BUILDING INFORMATION – 7, XX STREET (SHEET 1 OF 2)

EXISTING BUILDING:

1. General information and dimensions
   Age : Over 30 years (built in 1960's)
   Use : Industrial
   Building cover area : 21m x 16m
   Building height : 44m, 11 storeys high
   Floor height : Ground floor is 5.5 m; 1 st floor and up are 3.5 m,
   Typical floor plan is shown on Fig. G.2. Elevation of the Building is shown on Fig. G.3.

2. Structural conditions
   2.1 Structure :
   The building is reinforced concrete construction with conventional slab, beam, column and rigid frame design. It is supported on pile foundation.
   2.2 Conditions :
   The inspection reviewed that the building is well maintained and kept in good conditions. Other than minor cracks appearing on the finishing, no serious deterioration or damage to the structural element was observed.

3. Special structural features
   The building has cantilevered balconies projecting over the existing foot path on XX street. There is no other special structural element in the building.

4. Hazardous materials :
   4.1 The building may contain asbestos containing materials such as asbestos coated pipes. An Asbestos Investigation Report (AIR) will be conducted by a registered asbestos consultant. If asbestos containing materials are found to be inside the building, an Asbestos Abatement Plan (AAP) will be submitted to the Emvironmental Protection Department 28 days before the asbestos abatement work commences. The asbestos abatement work shall be conducted in accordance with the Air Pollution Control Ordinance and the Factories and Industrial Undertakings (Asbestos) Regulation. The AIR and AAP will be submitted separately to EPD.
   4.2 Handling of hazardous materials
   If asbestos containing materials and/or chemicals are present on the premises, all asbestos containing materials and/or chemicals shall be removed by registered asbestos contractor in accordance with Environmental Protection Department and Labour Department regulations prior to the commencement of the demolition work.

FIGURE G.2 TYPICAL FLOOR PLAN AND EXISTING BUILDING INFORMATION – 7, XX STREET (SHEET 2 OF 2)

mPD = m Principal Datum

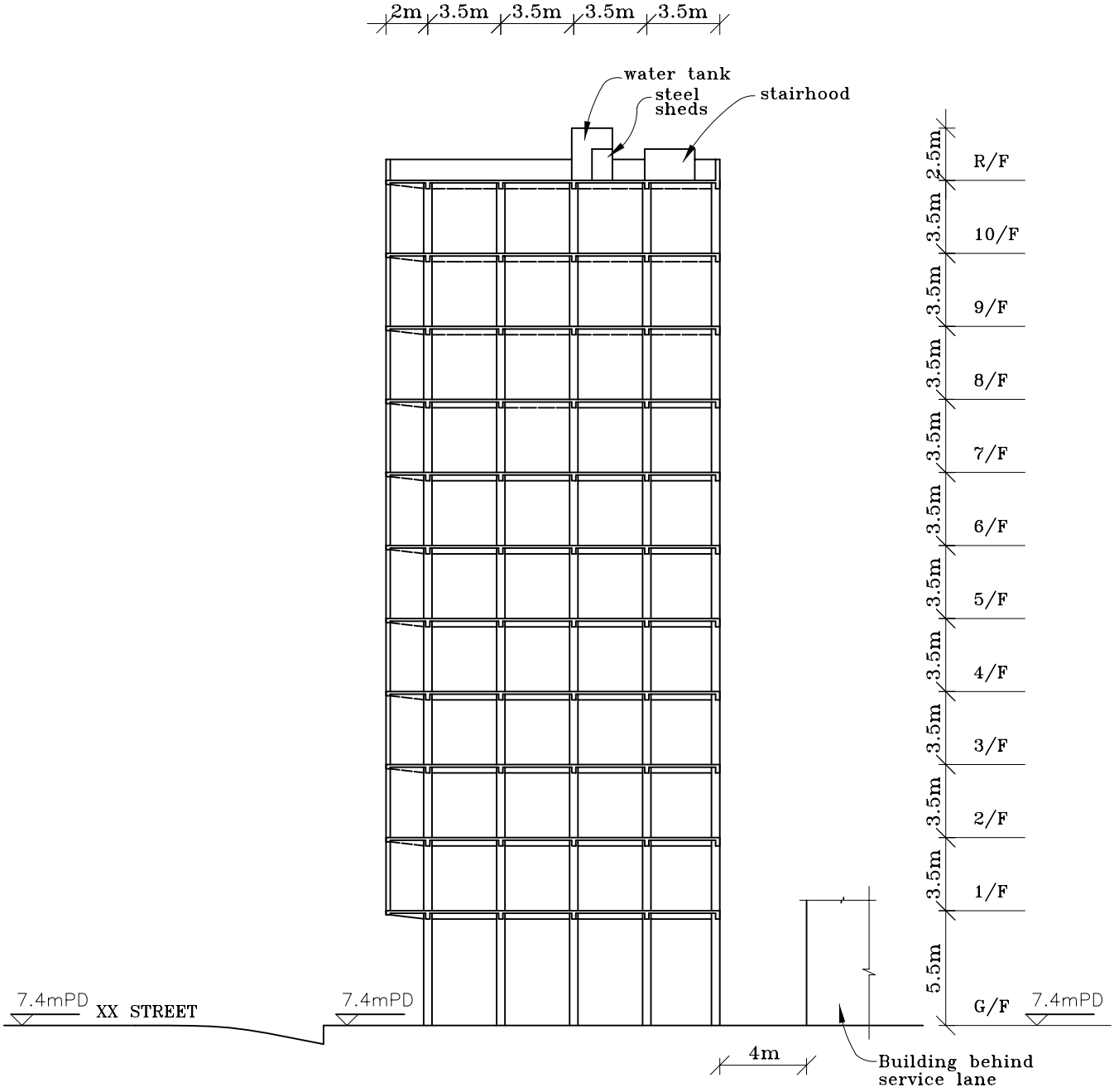

FIGURE G.3 ELEVATION A – 7, XX STREET

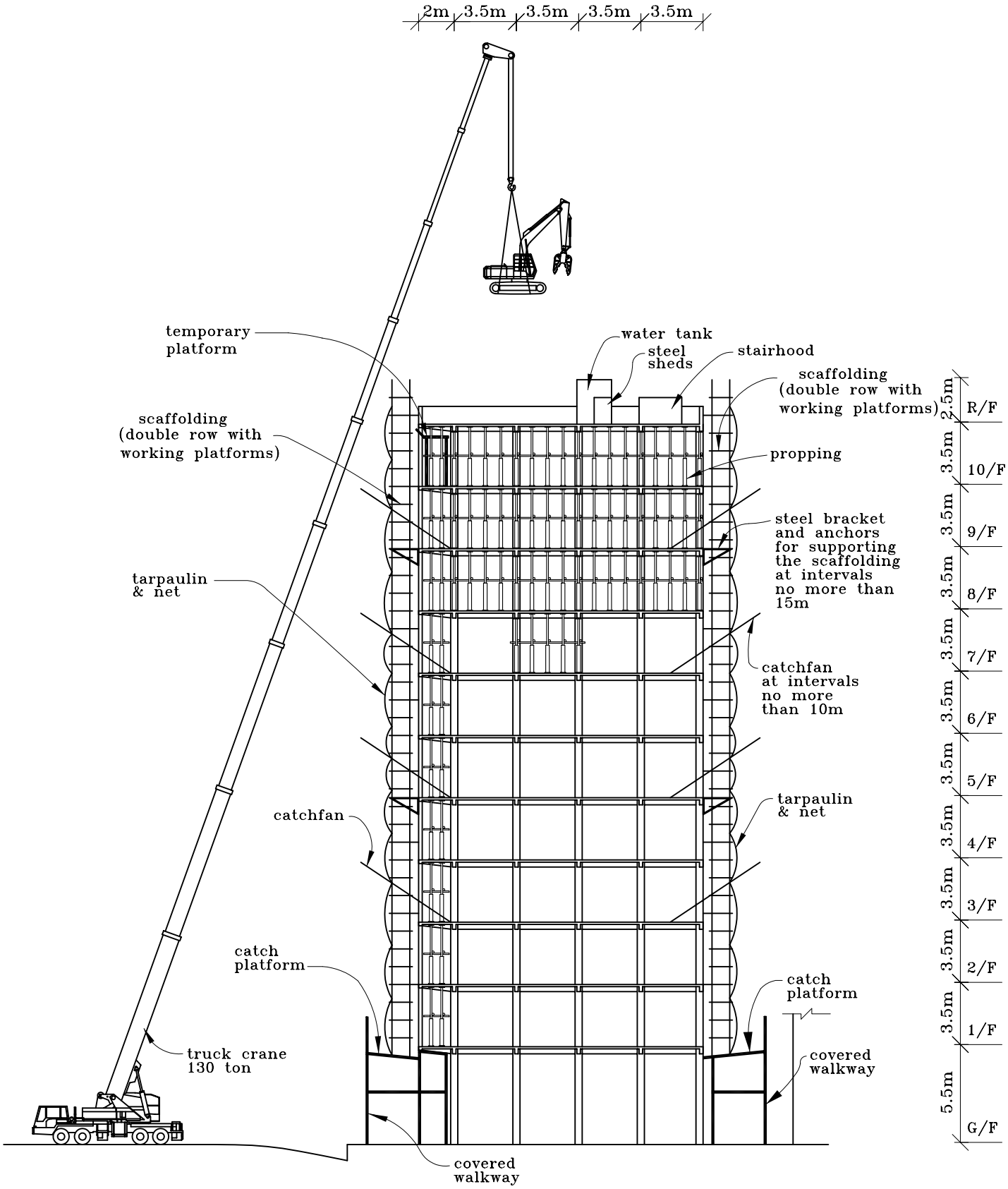

FIGURE G.4 DEMOLITION PROCEDURE AND SEQUENCE (SHEET 1 OF 5)

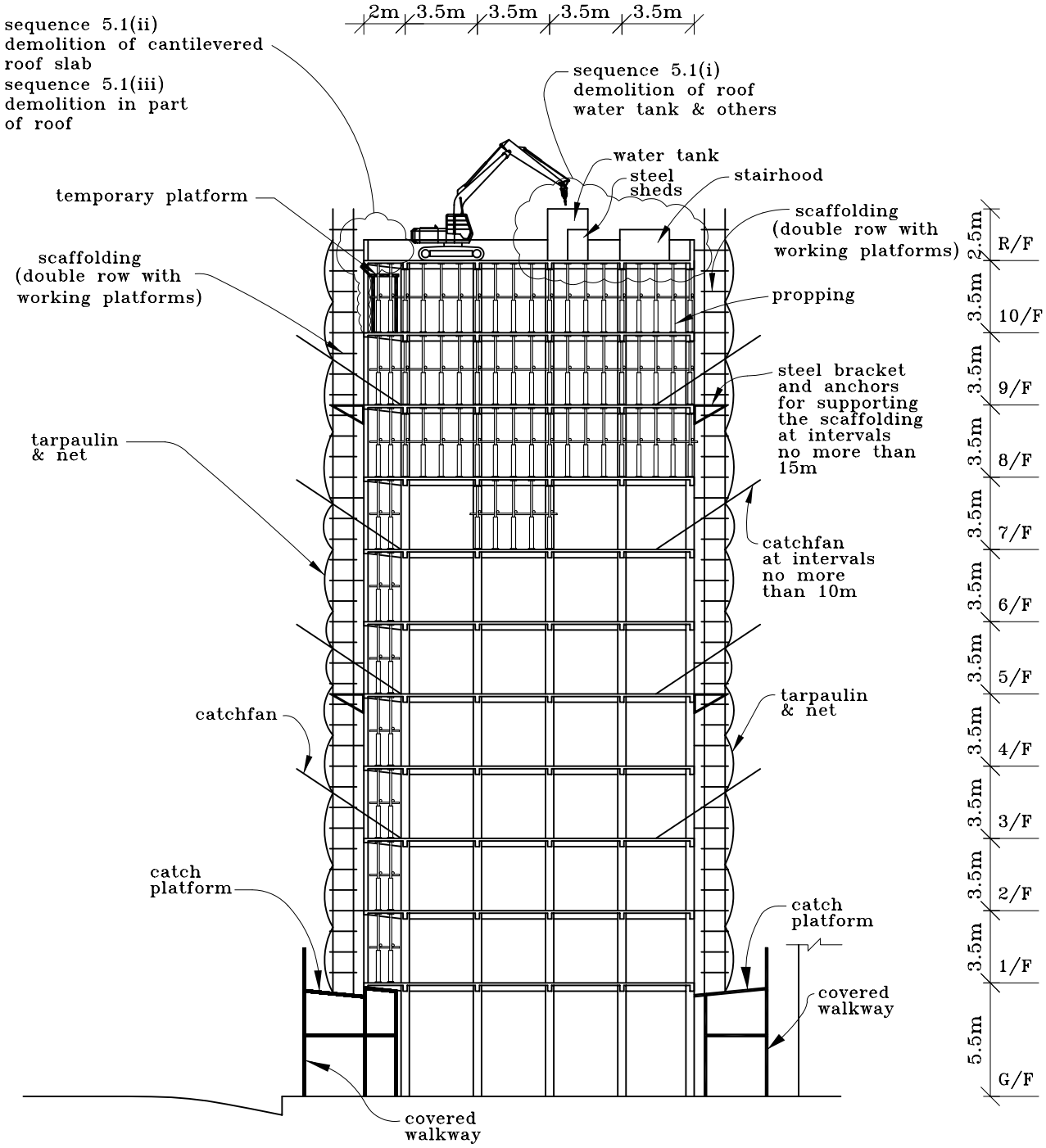

FIGURE G.4 DEMOLITION PROCEDURE AND SEQUENCE (SHEET 2 OF 5)

sequence 5.1(v)
The excavator proceeds down onto 10/F, add additional propping before moving the machine downwards.

sequence 5.2(i)
The excavator continues to demolish the remaining roof slabs, main beams and columns.

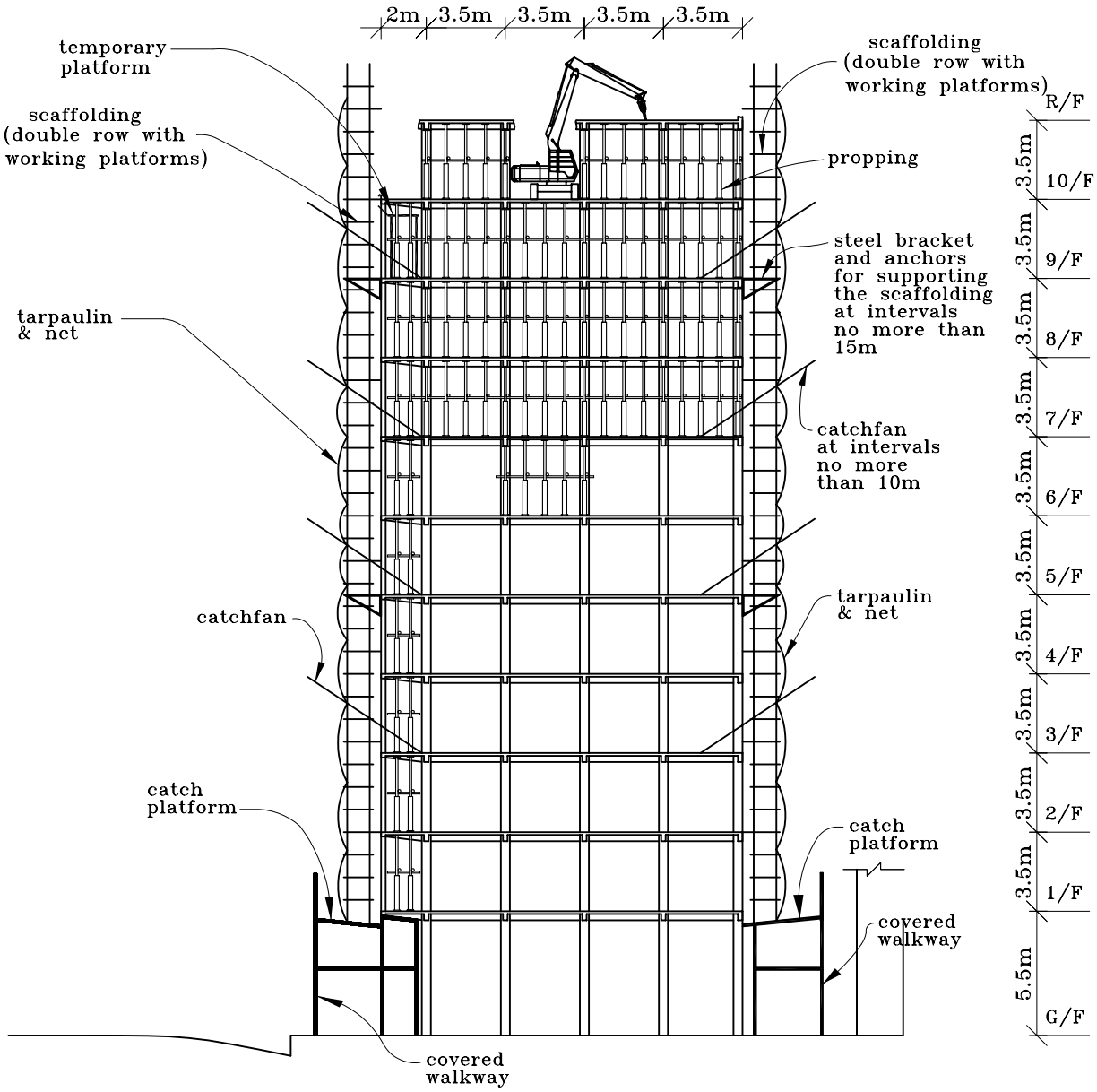

FIGURE G.4 DEMOLITION PROCEDURE AND SEQUENCE (SHEET 3 OF 5)

sequence 5.2(i)
Remove all beams, columns, walls and other structures above 9/F,

sequence 5.2(ii)
Remove first the exterior walls below linking the cantilevered structure, then the cantilevered slabs and beams between grid lines 5 & 6 on 9/F,

sequence 5.2(iii)
Demolition of remaining 9/F,

The procedure/sequence repeats as it reaches the ground level, and propping to be installed accordingly.

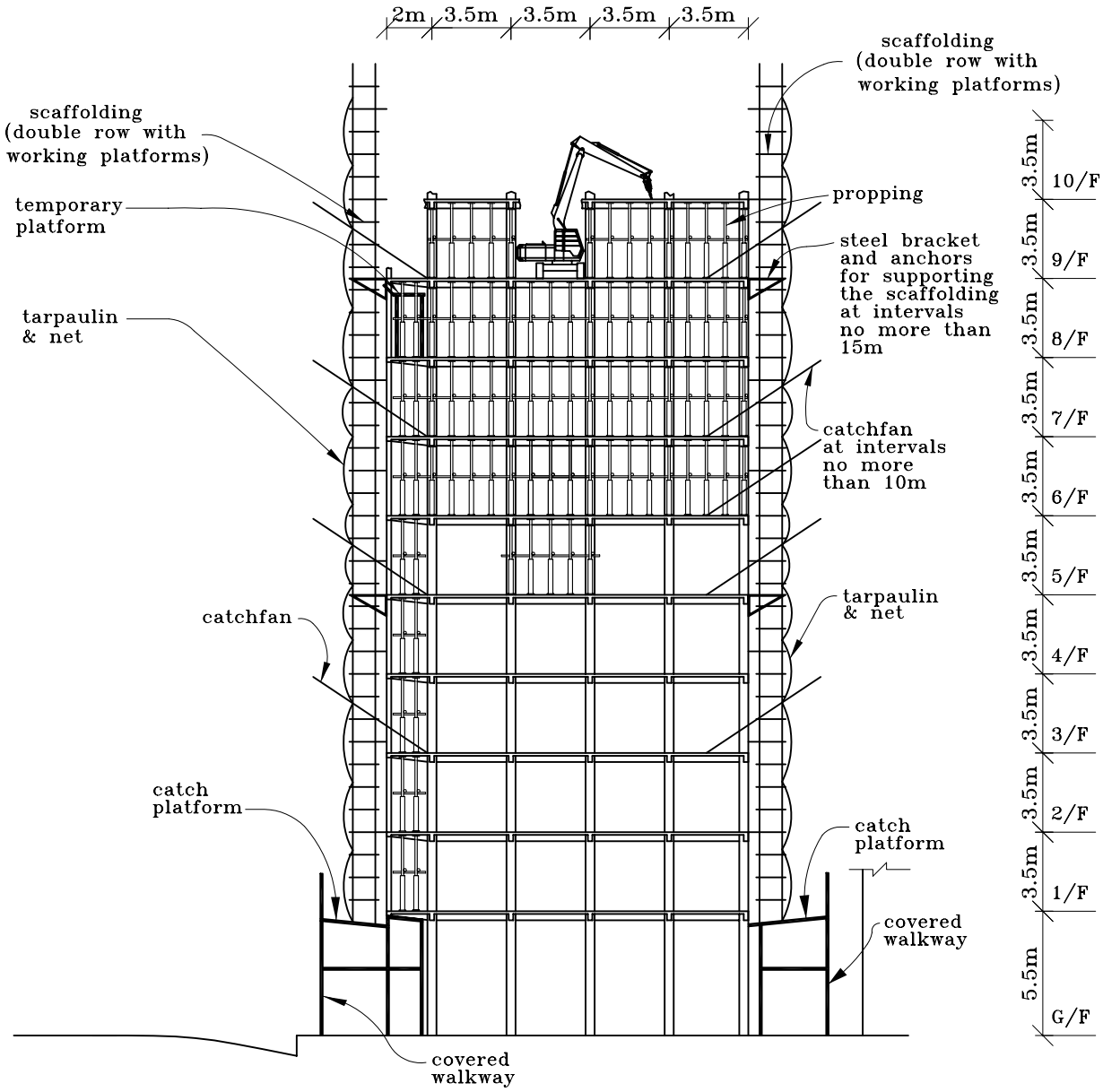

FIGURE G.4 DEMOLITION PROCEDURE AND SEQUENCE (SHEET 4 OF 5)

Demolition procedures:

1. General
   The building shall be demolished by Top Down Method by Machine. The procedures for demolition of structural elements by machine are as follows :-
   1.1 Cantilevered slab shall be supported and the area underneath it be protected according to the precautionary measures in item4(D) on page G15. The cantilevered slab shall be demolished as shown on the drawing (The drawing shall include details similar to Fig. 4.1, 4.2 & 4.12 in this Code of Practice),
   1.2 The demolition of cantilevered beams shall not commence unless all slabs and walls which are supported by the cantilevered beams are removed.
   1.3 The demolition of slabs and beams shall be as shown on the drawing (The drawing shall include details similar to Fig. 4.8, 4.10 and 4.11 in this Code of Practice),
   1.4 The demolition of columns and R.C. frames shall be as shown on the drawing (The drawing shall include details similar to Fig. 4.5, 4.13 & 4.14 in this Code of Practice).

2. Excavator and its movement restrictions
   2.1 Excavator of XYZ brand, Model 123, or approved equivalent, equipped with breaker or hydraulic crusher shall be used. The total weight of machine shall not exceed 11,000kg,
   2.2 The movement of the excavator shall be restricted to within the area with adequate propping. The excavator shall not move into the following areas :
      (i) within 2 m from the building edge,
      (ii) within 1 m from any openings,
      (iii) any cantilevered structures.
   2.3 Marking shall be placed to clearly identify the restriction for the movement of the excavator.

3. Exterior wall
   Exterior walls of the cantilevered balconies within grid lines 5 & 6 shall be demolished by hand held tools. The concrete shall be broken down in small manageable pieces with hand tools or pneumatic jack hammer not heavier than 50 kg. The reinforcing steel may be cut off after all the concrete are removed or when its support is no longer needed.

4. Lifting of excavator
   The excavator shall be lifted on the roof within the designated area where propping were installed. The lifting shall be performed by truck crane which is capable of lifting 130 ton load up to a height of 60 m. Approval from the Police and Transport Department shall be obtained prior to the lane closure and lifting operation.

5. Demolition sequence
   5.1 Roof
      (i) The reinforced concrete water tank and other incidental structures on the roof shall be demolished,
      (ii) The exterior walls linking the cantilevered structure shall first be demolished, followed by the cantilevered slabs and beams between grid lines 5 & 6,
      (iii) Demolition shall proceed with the roof slabs and secondary beams in the following order :
      $S-_{H3}$, $S-_{H4}$, $S-_{F4}$, $S-_{F3}$, $S-_{E4}$, $S-_{E3}$, $S-_{D4}$, $S-_{D3}$ and $S-_{B4}$,
      (iv) The reinforcing bar of the beams connecting the exterior walls to the interior columns shall remain until the demolition of the exterior wall,
      (v) The excavator shall proceed down onto the 10th floor by means of the temporary steel ramp placed at slabs $S-_{D3}$ and $S-_{E3}$,
   5.2 10th Floor
      (i) The excavator shall continue to demolish the remaining roof slabs, walls, the main beams and columns,
      (ii) Upon removal of all the beams, columns, walls and other structural elements above the floor, the exterior walls below linking the cantilevered structure shall then be demolished, followed by the cantilevered slabs and beams between grid lines 5 & 6,
      (iii) Demolition of the remaining floor shall follow the procedures as described in 5.1 (iii), (iv) and (v).
   5.3 9th Floor and floors below
      (i) The process of demolition of the 10th floor shall be repeated for 9th floor through ground floor,
      (ii) After demolition of the structural elements above ground floor, the ground floor slab shall be broken up,
      (iii) The existing pile cap and pilings below the existing ground level shall remain.

FIGURE G.4 DEMOLITION PROCEDURE AND SEQUENCE (SHEET 5 OF 5)

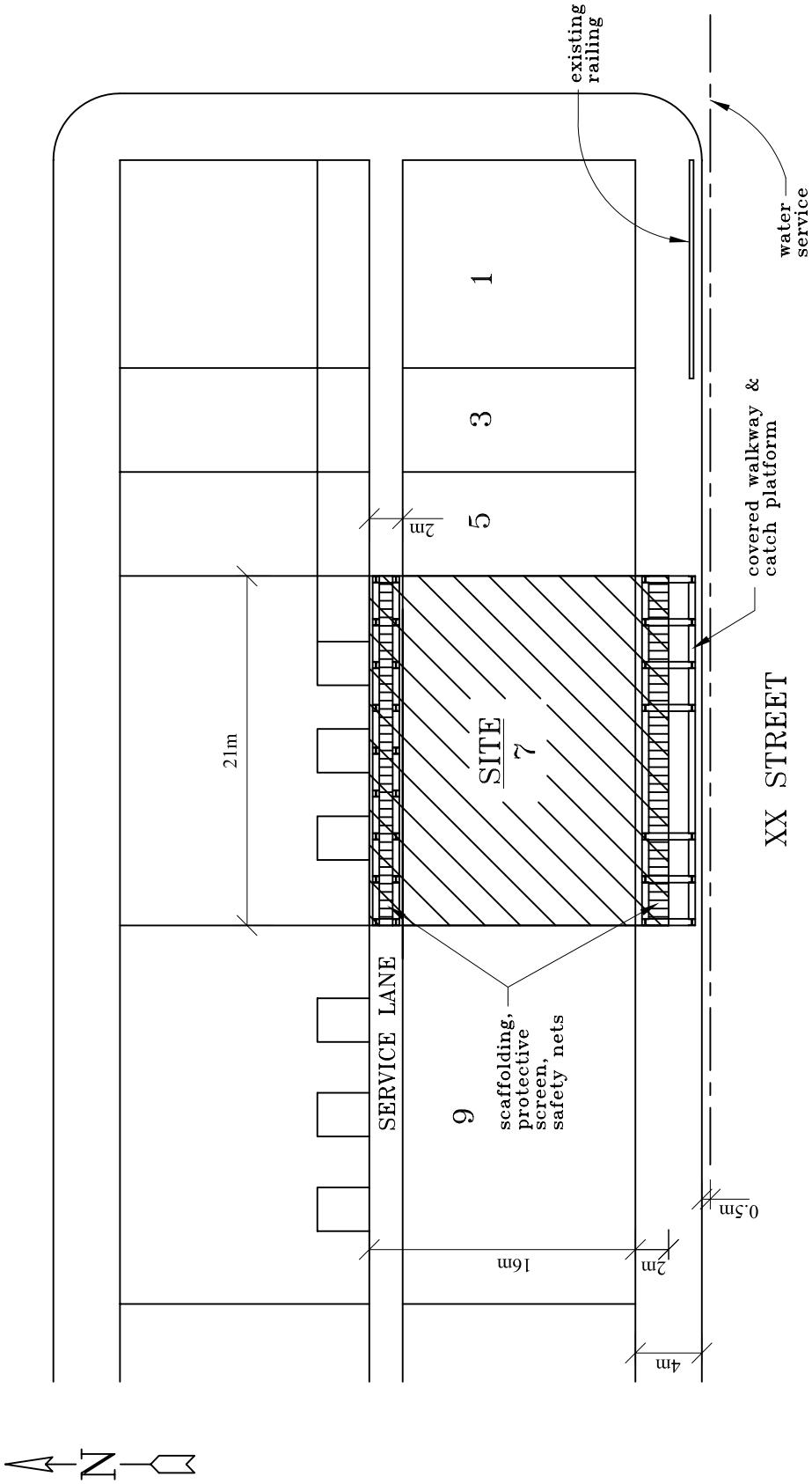

HOARDING COVERED WALKWAY AND CATCH PLATFORM

(DETAILS OF HOARDING, COVERED WALKWAY, CATCH PLATFORM AND CATCH FAN SIMILAR TO THOSE AS SHOWN ON FIGURE 3.2 & 3.3 OF THE CODE OF PRACTICE SHALL BE SHOWN)

FIGURE G.5 PRECAUTIONARY MEASURES

(SHEET 1 OF 5)

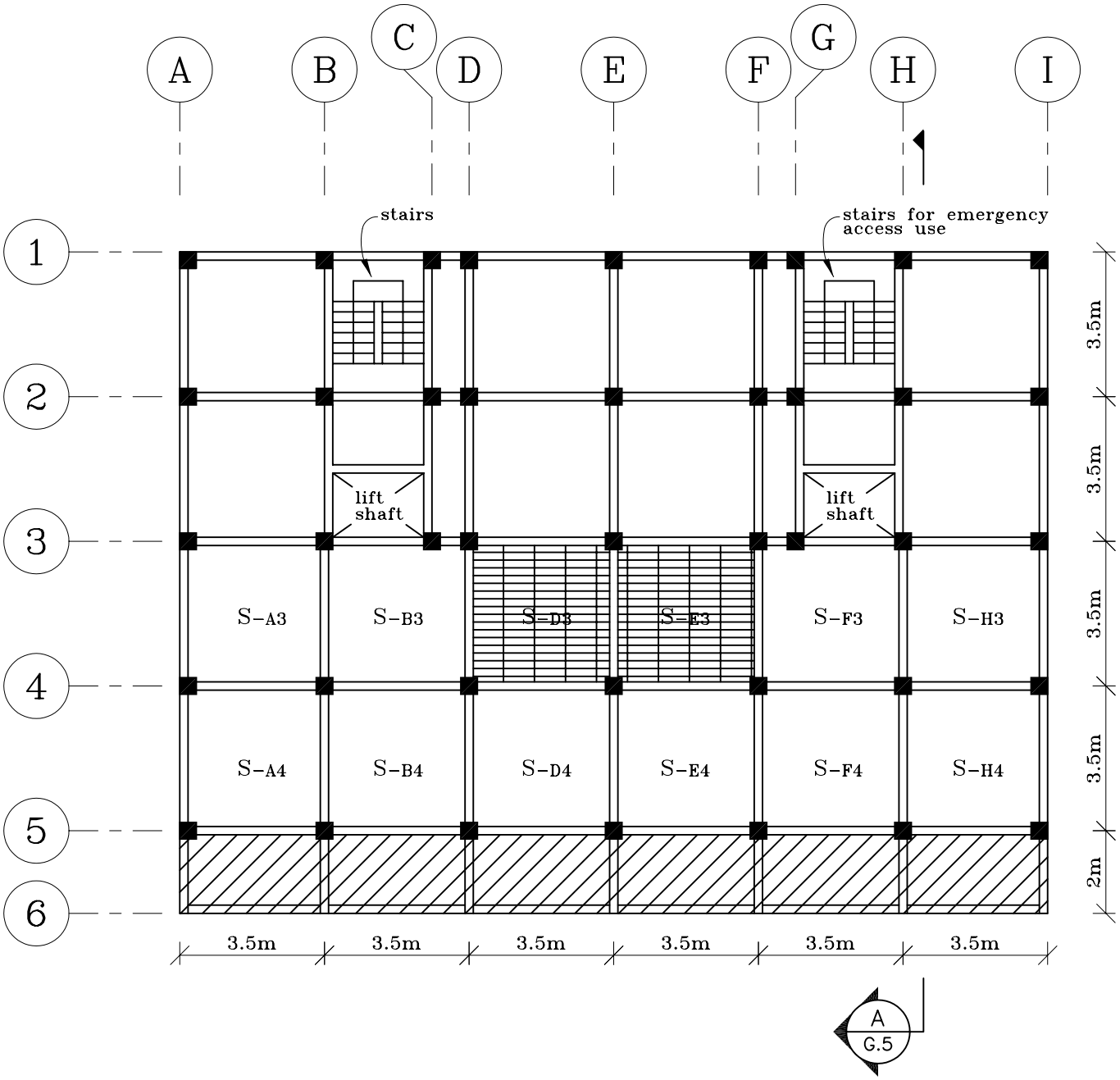

PROPPING SCHEDULE

	AREA	PROPPING BEARING CAPACITY	SPACING	No. OF FLOORS BELOW REQURE PROPPING
	cantilevered balconies	25kN	1.2m	all floors
	general floor	25kN	1.2m	3
	access ramp	45kN	1.2m	4

FIGURE G.5 PRECAUTIONARY MEASURES (SHEET 2 OF 5)

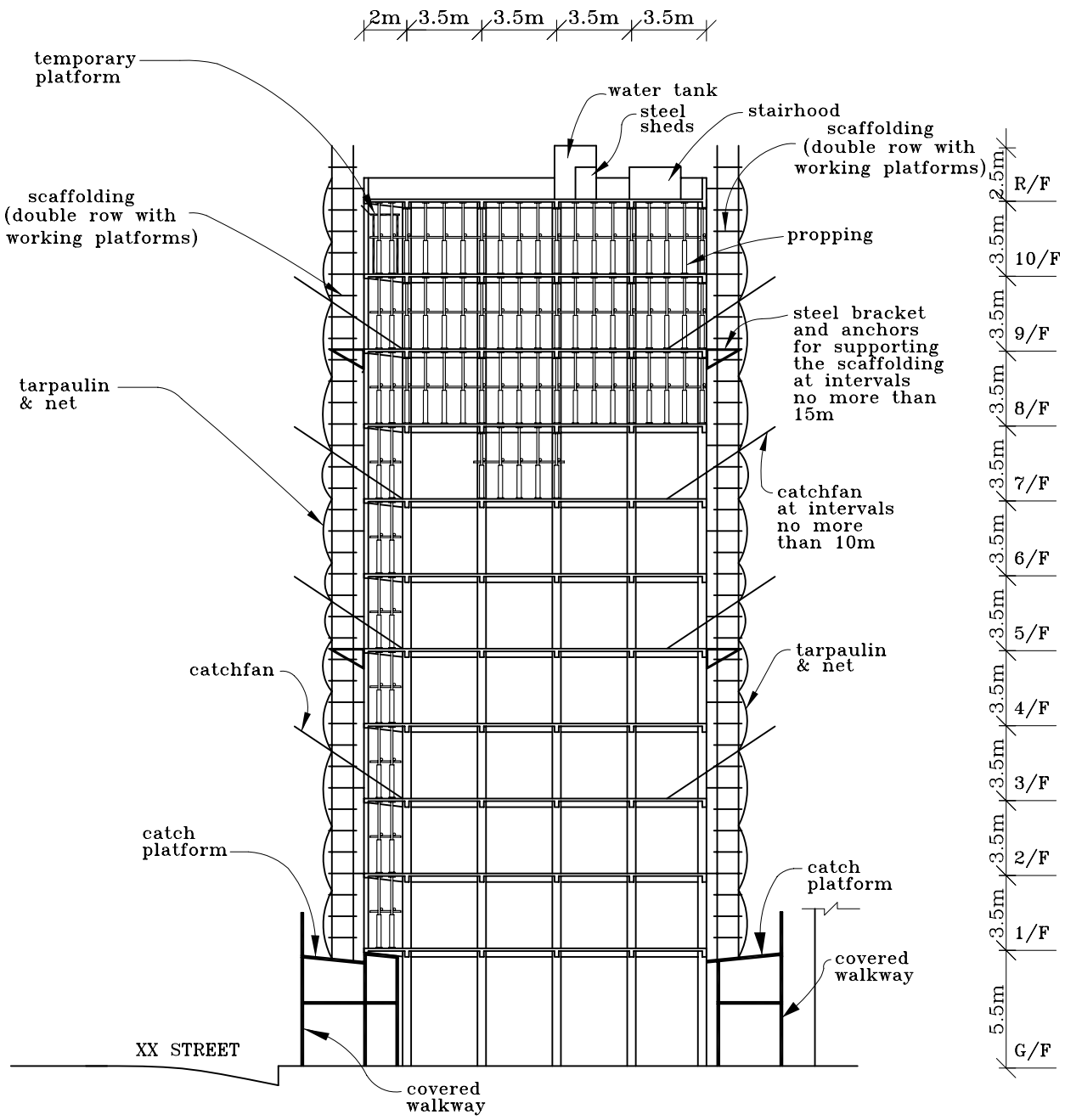

FIGURE G.5 ELEVATION A – PRECAUTIONARY MEASURES (SHEET 3 OF 5)

PRECAUTIONARY MEASURES:

Prior to the demolition of the main building structure, the following precautionary measures shall be carried out :

1. Utilities disconnection
   All utilities and services to the building shall be terminated. The sewer and drainage connections shall be plugged at the terminal manhole.
2. Covered walkway and catch platform
   (A) Covered walkway and catch platform shall be erected according to the approved plan by Building Authority along the entire length of the property boundaries on XX Street and the service lane. The covered walkway and catch platform foundation installation shall also comply with the conditions of the Excavation Permit by the Highways Department if necessary,
   (B) The carriageway shall be located on XX Street between grid lines D & F,
   (C) The catch platform along XX street shall be extended underneath the entire area of the 1 st floor cantilevered balconies.
3. Scaffolds, working platforms, screens and catchfans
   (A) Double row scaffolds with nets and tarpaulin shall be erected to cover the entire building,
   (B) The installation of the scaffolds, working platforms, nets, tarpaulin and catchfans shall be in accordance with the codes of practice on scaffolding safety and the Code of Practice for Demolition of Buildings,
   (C) Bamboo catchfans shall be installed around the building at vertical intervals of no more that 10m.
4. Temporary support
   (A) Propping shall be installed to support the operation of the mechanical plant and the demolition activities. The propping requirements for different floor areas were selected based on the recommendation of the Code of Practice for Demolition of Buildings. The propping Schedule is summarised in Figure G.5,
   (B) The top and bottom supports of the props shall be adequately secured. Bracing and/or lateral restraints in at least two directions shall be installed to prevent lateral movement of the props. Propping shall not be removed unless the support for the mechanical plant, debris or other loading conditions for the demolition process is no longer required,
   (C) A structural steel access ramp shall be provided for the excavator to manoeuvre down the floor. The gradient of the temporary ramp shall not be steeper than 30° or as recommended by the manufacturer.
   (D) A steel frame shall be placed underneath the balconies at 1/F to support the cantilevered structures above. Steel proppings shall be installed on all floors underneath the cantilevered slabs and beams. Steel propping shall have a bearing capacity of 25 kN, spaced at 1.2 m centre. The props shall be braced with lateral restraints. The area underneath each external cantilevered structure to be demolished shall be protected by a temporary platform.
5. Debris handling
   5.1 The steel sheds shall be dismantled. All trash, furniture, timber, door framed, windows shall be removed from the building. Any salvageable items shall be sorted and removed separately,
   5.2 Debris shall be conveyed to the ground floor through the lift shafts between grid lines G & H. The areas near the lift entrance shall be barricaded. Approximately 175 cu. m of building debris would be generated from the demolition of each floor. Clearing and transportation of debris shall be arranged to ensure the following conditions are maintained at all time :
      (A) Accumulation of debris in the lift shafts shall not exceed 1 m high,
      (B) Temporary storage on the floors shall not exceed 100 mm above the floors,
      (C) Debris accumulation on the ground floor shall not exceed 1 m above the ground floor slab,
      (D) No debris shall be accumulated on the cantilevered structures.
   5.3 Details of debris disposal and management system shall be submitted to BD prior to consent application as per the requirements in PNAP 268.
6. Special site safety
   6.1 Emergency exit
   The staircase between grid lines G and H shall be used as emergency exit route. The route shall be clear of debris at all time. Identification signs and/or marks shall be used to clearly indicate the route,
   6.2 Fire prevention
   Fire extinguishers shall be placed at a convenient location on each floor. All gasoline, flammable materials, oxygen and acetylene bottles shall be stored in a protected area.

FIGURE G.5 PRECAUTIONARY MEASURES
(SHEET 4 OF 5)

PRECAUTIONARY MEASURES:

6.3 Training

A competent trainer shall train all on site personnel. The training programme shall include the following :

(A) An induction course at the beginning of the project to provide the opportunity for on site personnel to understand the demolition procedures, site safety rules and critical safety concerns of the project,

(B) Daily safety meetings to reinforce the safety concept,

6.4 Dust and noise

(A) Dust generated during the demolition shall be suppressed by spraying water continuously during the breaking operation,

(B) All jack hammers and excavator mounted breakers shall be equipped with silencer attachments. The air compressor shall be super silence type. Demolition work shall not be performed within the restricted hours from 1900 hrs. to 0700 hrs. all day and from 0700 hrs. to 1900 hrs. on general holidays including SUNDAY. Mobile air compressor shall be placed on ground floor.

7. Maintenance & inspection

7.1 Inspection shall be performed by the representatives of the AP and the RSE on a weekly basis and contractor on a daily basis to ensure that all the temporary structures, catchfans and catch platforms are in good conditions. Any accumulation of debris shall be removed. Any movement, damage or distortion to temporary structures shall be identified and repaired, if necessary. The inspection and repair activities shall be recorded and copied to the AP.

7.2 Contractor shall also inspect the site, daily, to identify any unsafe condition, such as damage to the temporary supports or unstables and/or partially demolished structural elements. Any unsafe conditions shall be rectified before leaving the job site.

7.3 Inspection and maintenance of scaffold shall be performed in accordance with the codes of practice on scaffolding safety and the Construction Site (Safety) Regulations by the contractor.

8. Emergency plan

8.1 Emergency telephone numbers shall be posted in conspicuous locations. In case of accident or emergency, the contractor shall report to the Police and Fire Services Department for immediate assistance. The contractor shall also contact the AP and RSE immediately about the incident.

8.2 Prior to a typhoon warning or a major storm event, the following items shall be performed :

8.2.1 All the temporary supports, scaffold, screens and any loose materials shall be secured. The scaffold shall be taken down to the prevailing top level of the building,

8.2.2 Flammable materials shall be removed or stored in a protected area.

8.2.3 The excavator should be moved to a location with proper support, preferably close to the centre of the building,

8.2.4 Any unstable and/or partially demolished structure shall be completed. If it is not practical to complete the demolition timely the unstable structural element shall be braced and supported.

9. Post demolition

9.1 The site shall be levelled and clear of debris,

9.2 If the new development is not immediate, the property boundaries shall be properly enclosed to prevent public entrance,

9.3 Any damage to pavement, footpath and elements within the right of way shall be repaired to its original conditions prior to the completion of the demolition project.

FIGURE G.5 PRECAUTIONARY MEASURES (SHEET 5 OF 5)

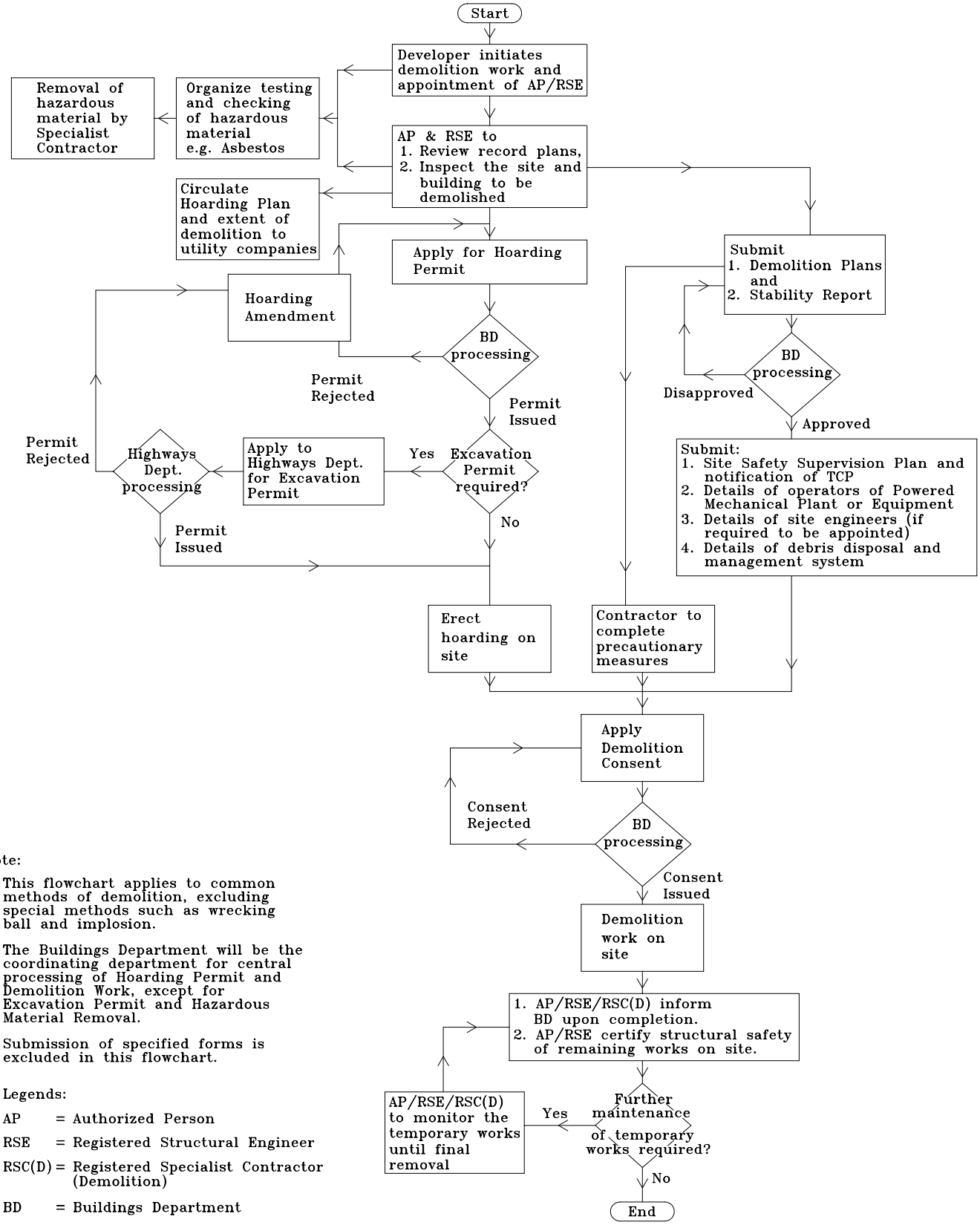

Note:

1. This flowchart applies to common methods of demolition, excluding special methods such as wrecking ball and implosion.
2. The Buildings Department will be the coordinating department for central processing of Hoarding Permit and Demolition Work, except for Excavation Permit and Hazardous Material Removal.
3. Submission of specified forms is excluded in this flowchart.
4. Legends:

AP	= Authorized Person
RSE	= Registered Structural Engineer
RSC(D)	= Registered Specialist Contractor (Demolition)
BD	= Buildings Department
TCP	= Technically Competent Person

FIGURE H.1 FLOWCHART FOR CURRENT DEMOLITION PROCEDURE

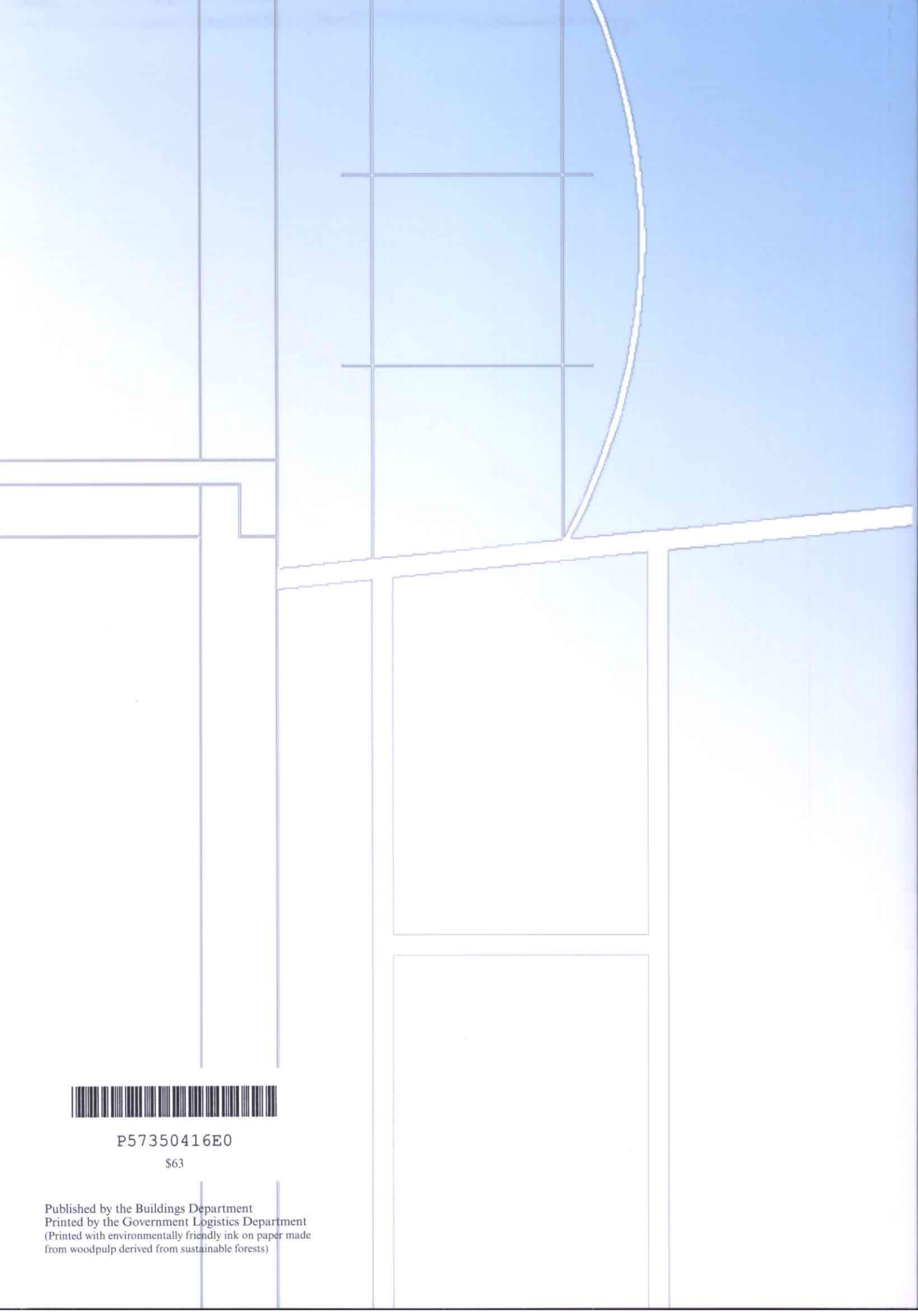

P57350416E0

$63

Published by the Buildings Department
Printed by the Government Logistics Department
(Printed with environmentally friendly ink on paper made from woodpulp derived from sustainable forests)