USB5744

Hardware Design Checklist

1.0 INTRODUCTION

This document provides a hardware design checklist for the Microchip USB5744. These checklist items should be followed when utilizing the USB5744 in a new design. A summary of these items is provided in Section 10.0, "Hardware Checklist Summary," on page 25. Detailed information on these subjects can be found in the corresponding section:

- General Considerations on page 1
- Power on page 1
- USB Signals on page 2
- USB Connectors on page 10
- Clock Circuit on page 16
- Power and Startup on page 17
- External SPI Memory on page 19
- Miscellaneous on page 22
- Hardware Checklist Summary on page 25

2.0 GENERAL CONSIDERATIONS

2.1 Pin Check

- Check the pinout of the part against the data sheet. Ensure all pins match the data sheet and are configured as inputs, outputs, or bidirectional for error checking.

2.2 Ground

- The ground pins, **GND**, should be connected to the solid ground plane on the board.
- It is recommended that all ground connections be tied together to the same ground plane. Separate ground planes are not recommended.

2.3 USB-IF Compliant USB Connectors

- USB-IF certified USB Connectors with a valid Test ID (TID) are required for all USB products to be compliant and pass USB-IF product certification.

3.0 POWER

3.1 Power and Bypass Capacitance

- The analog supplies (**VDD33**) are located on pins 16, 31, 44, 55 and require a connection to a regulated 3.3V power plane.
- The **VDD33** pins each should include 0.1 µF capacitors to decouple the device. The capacitor size should be SMD_0603 or smaller.
- The analog supplies (**VDD12**) are located on pins 5,12,15, 21, 28, 33, 43, 49 and require a connection to a regulated 1.2V power plane.
- The **VDD12** pins each should include 0.1 µF capacitors to decouple the device. The capacitor size should be SMD_0603 or smaller.

The power and ground connections are shown in Figure 3-1.

© 2019 Microchip Technology Inc.

FIGURE 3-1: POWER AND GROUND CONNECTIONS

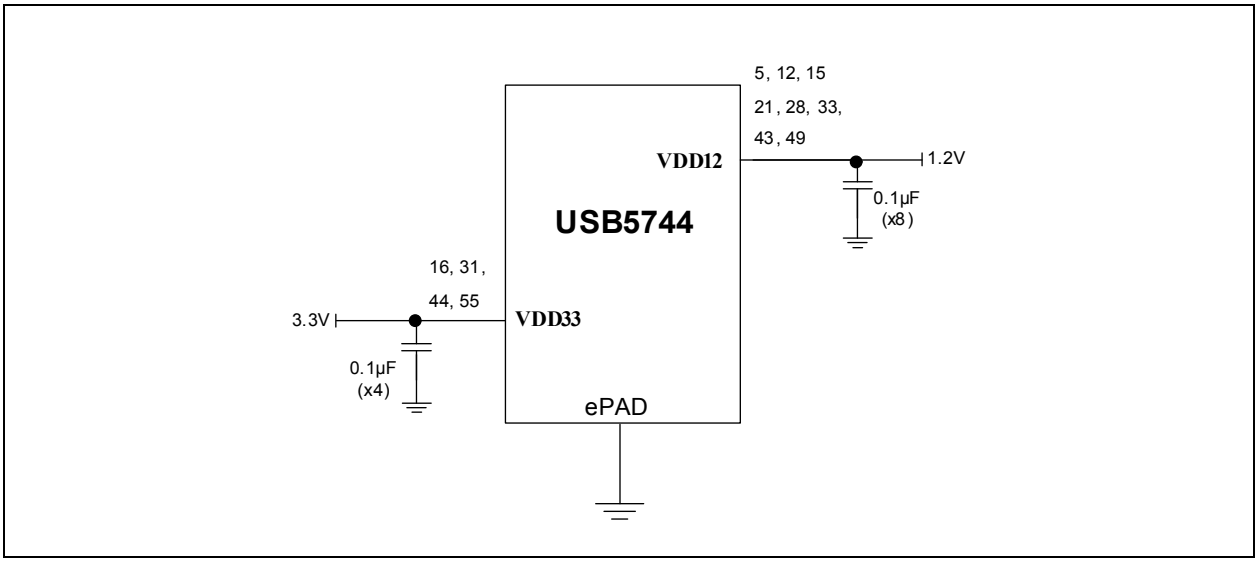

4.0 USB SIGNALS

4.1 Upstream Port USB Signals

- **USB2UP_DP** (pin 45): This pin is the positive (+) signal of the upstream USB2.0 differential pair. All necessary USB terminations and resistors are included internally (no external resistors required). This pin can connect directly to the D+/DP[1] pin of a USB Connector.
- **USB2UP_DM** (pin 46): This pin is the negative (–) signal of the upstream USB2.0 differential pair. All necessary USB terminations and resistors are included internally (no external resistors required).This pin can connect directly to the D–/DM[1] pin of a USB Connector.
- **USB3UP_TXDP** (pin 47): This pin is the positive (+) signal of the upstream USB3.1 'Side A' transmitter (TX) differential pair. All necessary USB terminations and resistors are included internally (no external resistors required). This pin requires a series 0.1 uF decoupling (DC blocking) capacitor before being connected directly to the TX+ (or TX–)[2] pin of the USB Connector.
- **USB3UP_TXDM** (pin 48): This pin is the negative (–) signal of the upstream USB3.1 'Side A' transmitter (TX) differential pair. All necessary USB terminations and resistors are included internal the IC. This pin requires a series 0.1 uF decoupling (DC blocking) capacitor before being connected directly to the TX– (or TX+)[2] pin of the USB Connector.
- **USB3UP_RXDP** (pin 50): This pin is the positive (+) signal of the upstream USB3.1 'Side A' receiver (RX) differential pair. All necessary USB terminations and resistors are included internally (no external resistors required). This pin can be connected directly to the RX+ (or RX–)[2] pin of the USB Connector.
- **USB3UP_RXDM** (pin 51): This pin is the negative (–) signal of the upstream USB3.1 'Side A' receiver (RX) differential pair. All necessary USB terminations and resistors are included internally (no external resistors required). This pin can be connected directly to the RX– (or RX+)[2] pin of the USB Connector.

Note 1: The polarity of any of the USB2.0 differential pairs may be inverted either intentionally due to design constraints or to correct a design error using the Microchip PortSwap feature. This feature may be configured via OTP or SMBus/I^{2}C configuration registers.

2: A standard feature of USB3.1 is automatic polarity detection and correction. There is no negative impact if the positive and negative pins of the TX lines are swapped, or if the positive and negative pins of the RX lines are swapped.

For the standard Type-B port connection details, refer to Figure 4-1.

© 2019 Microchip Technology Inc.

FIGURE 4-1: UPSTREAM PORT TYPE-B USB CONNECTIONS

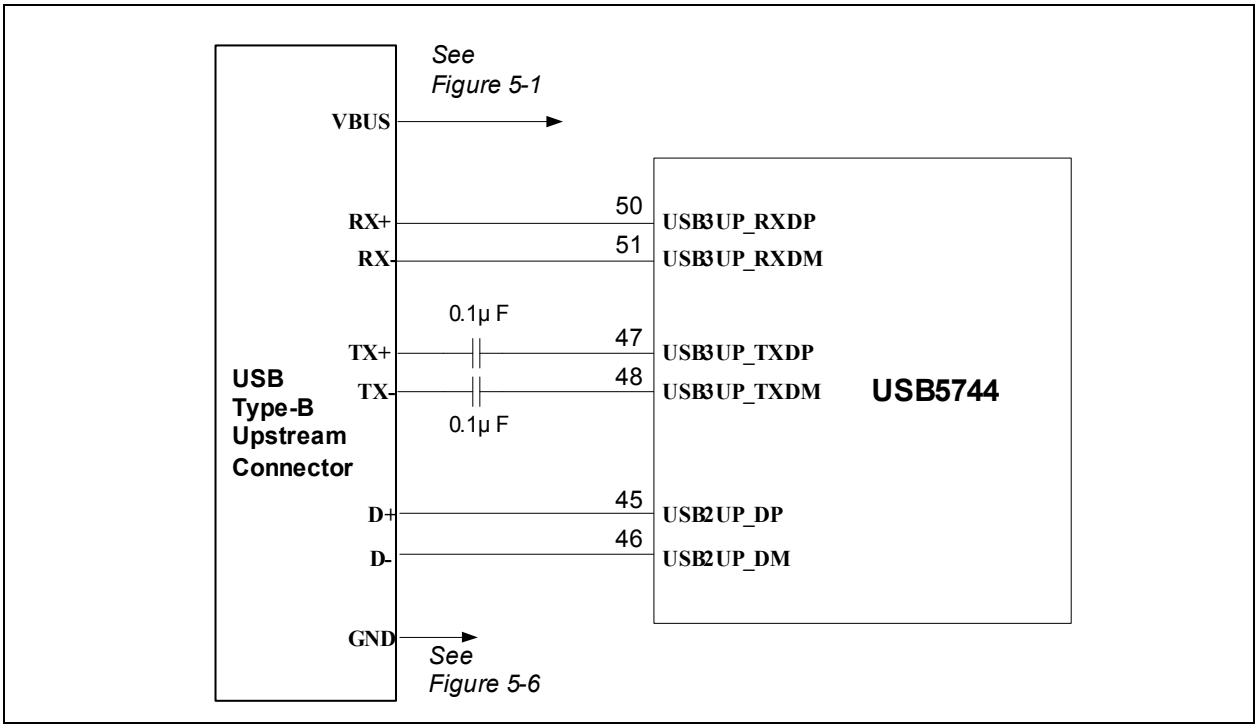

When connecting the upstream port of a USB5744 to a Type-C connector, the following additional components are required:

- A basic Upstream Facing Port (UFP) Type-C Controller or USB Power Delivery Type-C Controller
- A 2:1 Multiplexer (if no Alternate mode support is required) or an Alternate mode-specific cross bar switch (such as a 6:4 mux for DisplayPort Alternate mode support).

For an example on how to connect the upstream port to a Type-C port, refer to Figure 4-2.

FIGURE 4-2: UPSTREAM PORT TYPE-C USB CONNECTIONS

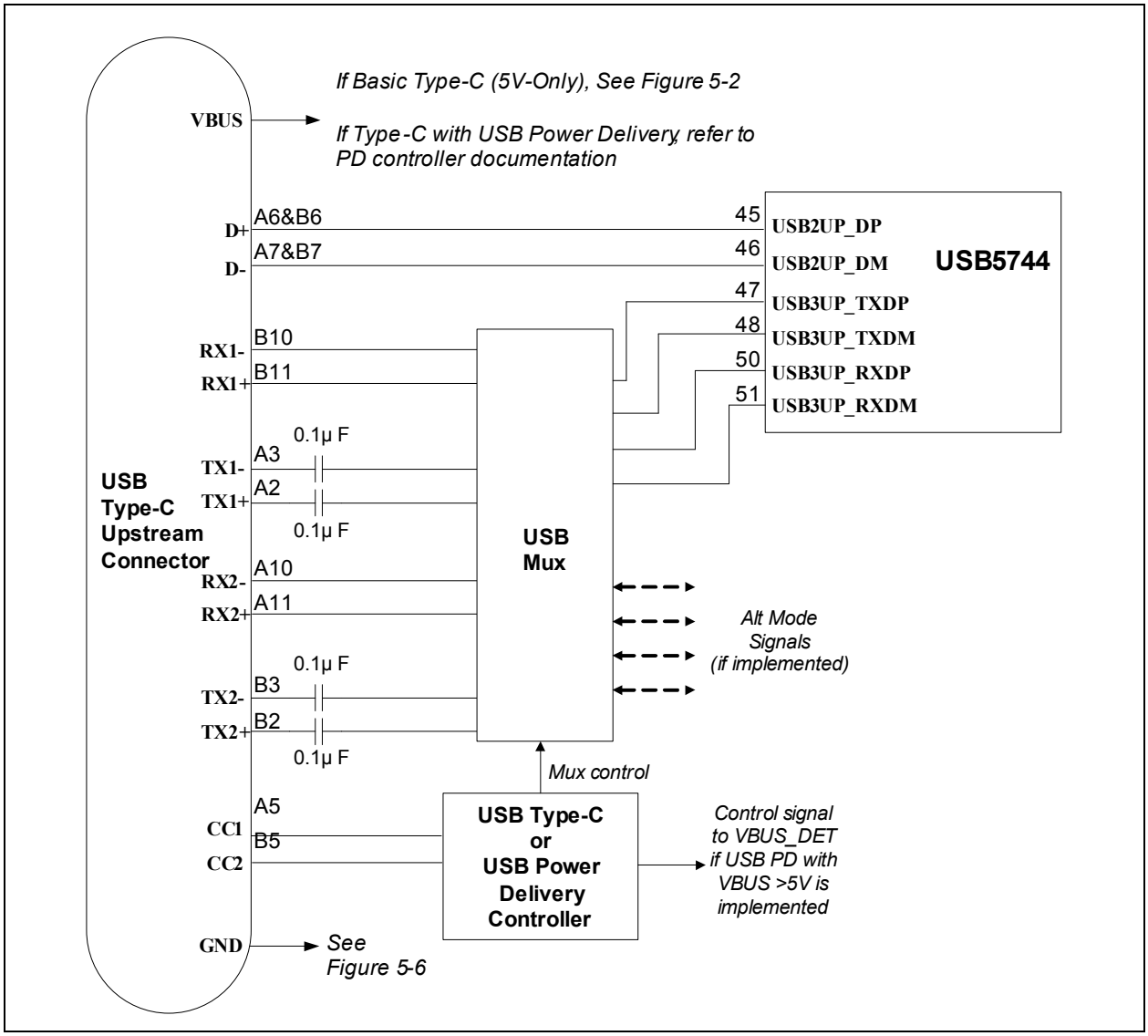

When connecting the upstream port to an embedded USB3.1 host or the downstream port of another embedded USB3.1 hub, ensure that the transmitter pins on the hub are properly connected to the receiver pins of the host, and that the receiver pins on the hub are properly connected to the host transmitter pins. DC blocking decouple capacitors are still required in an embedded connection on both differential pairs.

For an example on how to connect the upstream port to an embedded USB3.1 host, refer to Figure 4-3.

© 2019 Microchip Technology Inc.

FIGURE 4-3: UPSTREAM PORT EMBEDDED HOST USB CONNECTIONS

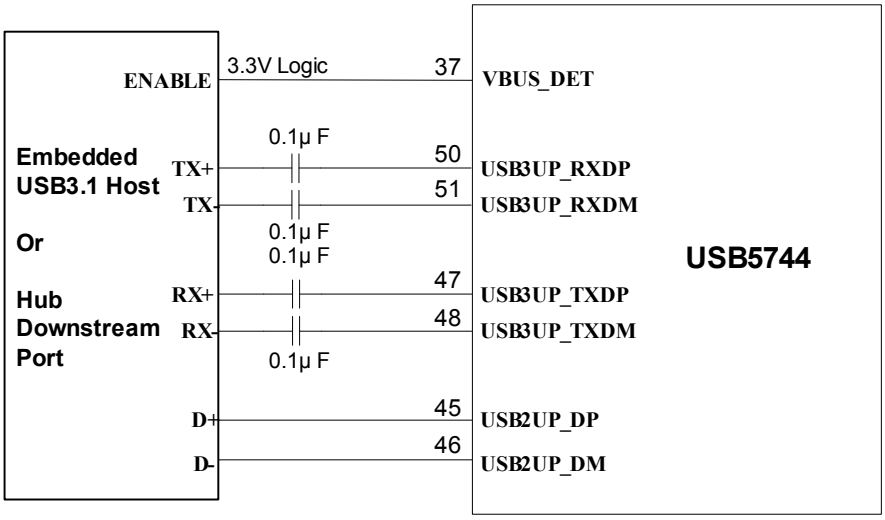

4.2 Downstream Port USB Signals

- **USB2DN_DP1/USB2DN_DP2/USB2DN_DP3/USBDN_DP4** (pins 1/8/17/24): This pin is the positive(+) signal of the downstream port USB2.0 differential pair. All necessary USB terminations and resistors are included internally (no external resistors required). This pin can connect directly to the D+/DP[1] pin of a USB Connector.
- **USB2DN_DM1/USB2DN_DM2/USB2DN_DM3/USB2DN_DM4** (pins 2/9/18/25): This pin is the negative (–) signal of the downstream port USB2.0 differential pair. All necessary USB terminations and resistors are included internally (no external resistors required). This pin can connect directly to the D-/DM[1] pin of a USB Connector.
- **USB3DN_TXDP1/USB3DN_TXDP2/USB3DN_TXDP3/USB3DN_TXDP4** (pins 3/10/19/26): This pin is the positive (+) signal of the downstream port USB3.1 transmitter (TX) differential pair. All necessary USB terminations and resistors are included internally (no external resistors required). This pin requires a series 0.1 uF decoupling (DC blocking) capacitor before being connected directly to the TX+ (or TX–)[2] pin of the USB Connector.
- **USB3DN_TXDM1/USB3DN_TXDM2/USB3DN_TXDM3/USB3DN_TXDM4** (pins 4/11/20/27): This pin is the negative (–) signal of the downstream port USB3.1 transmitter (TX) differential pair. All necessary USB terminations and resistors are included internally (no external resistors required). This pin requires a series 0.1 uF decoupling (DC blocking) capacitor before being connected directly to the TX– (or TX+)[2] pin of the USB Connector.
- **USB3DN_RXDP1/USB3DN_RXDP2/USB3DN_RXDP3/USB3DN_RXDP4** (pins 6/13/22/29): This pin is the positive (+) signal of the downstream port USB3.1 receiver (RX) differential pair. All necessary USB terminations and resistors are included internally (no external resistors required). This pin can be connected directly to the RX+ (or RX–)[2] pin of the USB Connector.
- **USB3DN_RXDM1/USB3DN_RXDM2/USB3DN_RXDM3/USB3DN_RXDM4** (pins 7/14/23/30): This pin is the negative (–) signal of the downstream port USB3.1 receiver (RX) differential pair. All necessary USB terminations and resistors are included internally (no external resistors required). This pin can be connected directly to the RX– (or RX+)[2] pin of the USB Connector.

Note 1: The polarity of any of the USB2.0 differential pairs may be inverted either intentionally due to design constraints or to correct a design error using the Microchip PortSwap feature. This feature may be configured via OTP or SMBus/I^{2}C configuration registers.

2: A standard feature of USB3.1 is automatic polarity detection and correction. There is no negative impact if the positive and negative pins of the TX lines are swapped, or if the positive and negative pins of the RX lines are swapped.

For the standard Type-A port connection details, refer to Figure 4-4.

FIGURE 4-4: DOWNSTREAM PORT TYPE-A USB CONNECTIONS

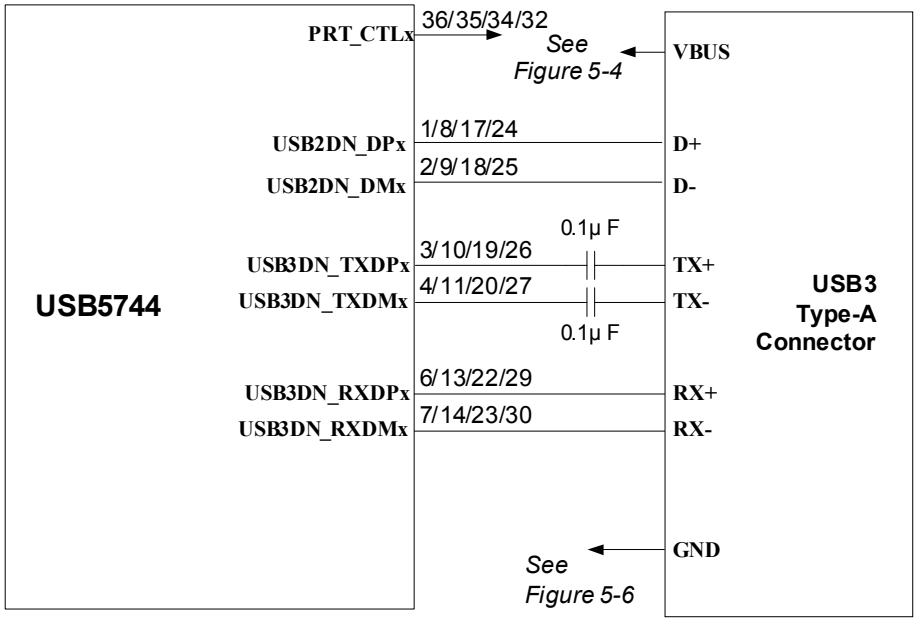

When connecting the upstream port to a legacy Type-C connector, the following additional components are required:

- A Basic Upstream Facing Port (UFP) Type-C Controller or USB Power Delivery Type-C Controller
- A 2:1 Multiplexer (if no Alternate mode support is required) or an Alternate mode specific cross bar switch (such as a 6:4 mux for DisplayPort Alternate mode support)

For an example on how to connect downstream Ports 1 and/or 2 to a legacy Type-B port, refer to Figure 4-5.

© 2019 Microchip Technology Inc.

FIGURE 4-5: DOWNSTREAM PORT TYPE-C USB CONNECTIONS

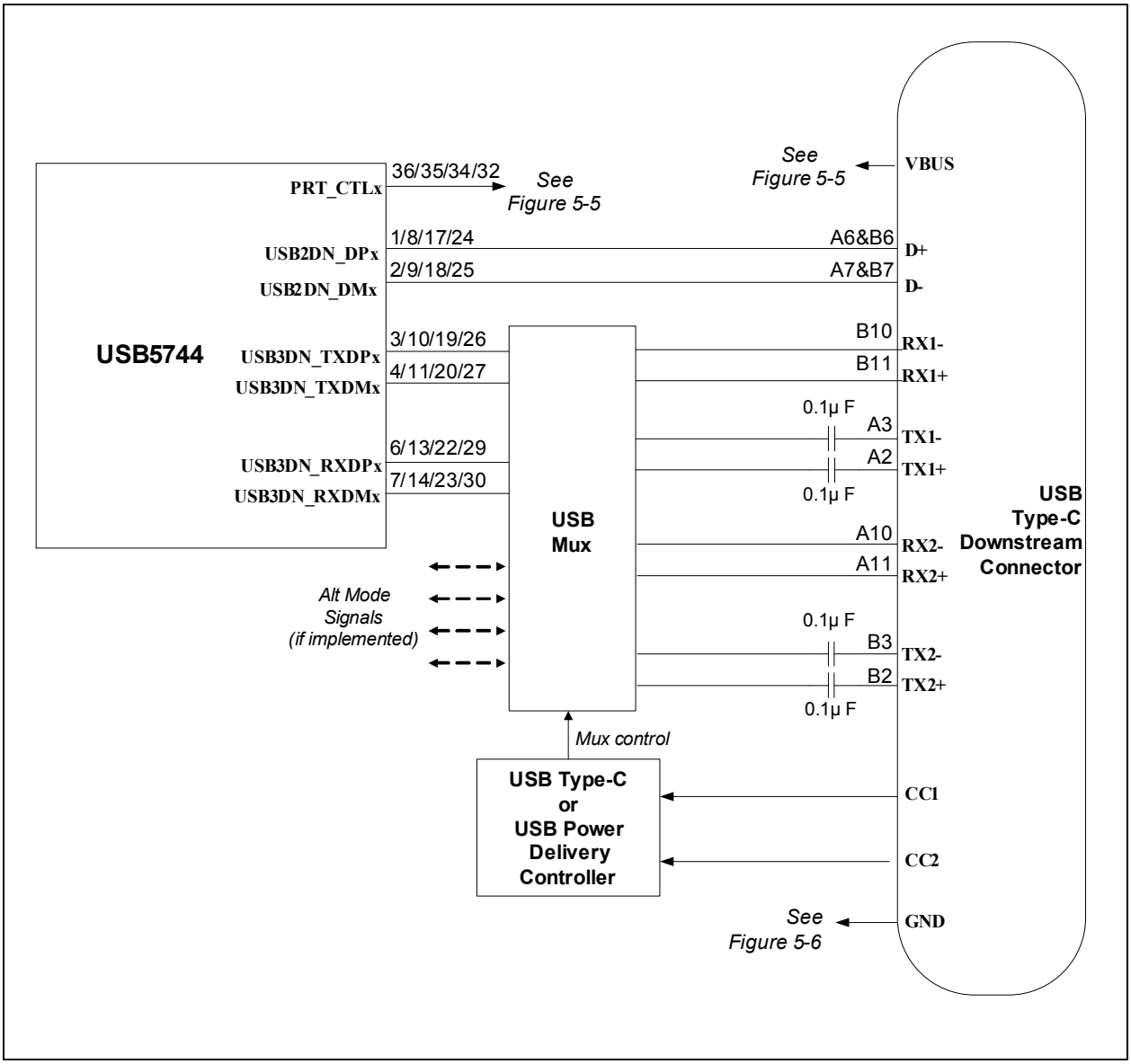

When connecting the downstream port to an embedded USB3.1 device, or the upstream port of another embedded USB3.1 hub, some pin connections change:

- PRT_CTLx should directly control the ‘enable’ of the embedded USB device or hub upstream port. Signal level shifting or inversion may be required, depending on the device.
- USB D+ and USB D– should connect directly to USB D+ and USB D– of the embedded USB device or hub upstream port.
- The downstream port transmitter (TX+/–) pins should connect to the receiver pins of the embedded USB device or hub upstream port. DC blocking 0.1 uF caps must be placed in between the hub downstream and the embedded USB device or hub upstream port. USB3 signals have automatic polarity detection and correction. The polarity of these pins may be swapped to allow for the more straightforward PCB routing.
- The downstream port receiver (RX+/–) pins should connect to the transmitter pins of the embedded USB device or hub upstream port. DC blocking 0.1 uF caps must be placed in between the hub downstream and the embedded USB device or hub upstream port. USB3 signals have automatic polarity detection and correction. The polarity of these pins may be swapped to allow for the more straightforward PCB routing.

For an example on how to connect downstream Ports 1 and/or 2 to an embedded USB3.1 device or hub upstream port, refer to Figure 4-6.

FIGURE 4-6: DOWNSTREAM PORT EMBEDDED DEVICE USB CONNECTIONS

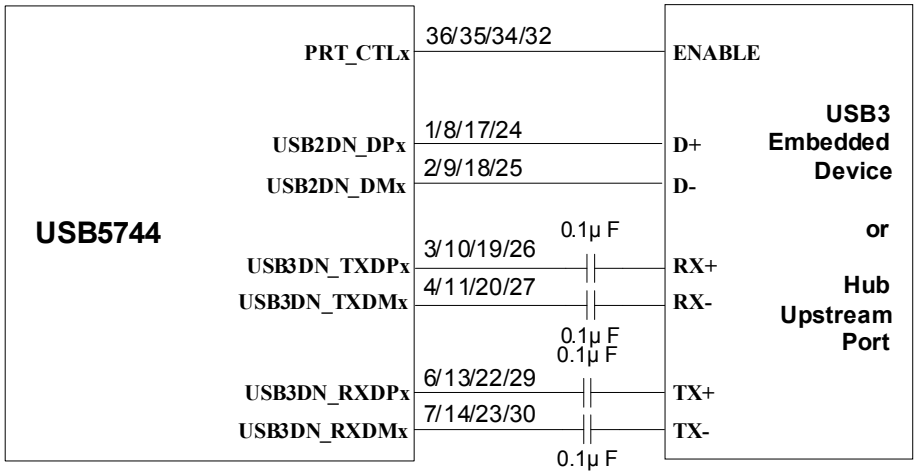

If connecting a downstream port to a USB2.0-only connector, refer to Figure 4-7. Note that in this configuration, the USB3.1 portion of the port should be disabled in the hub configuration to meet USB specification requirements.

FIGURE 4-7: DOWNSTREAM PORT USB2 ONLY TYPE-A USB CONNECTIONS

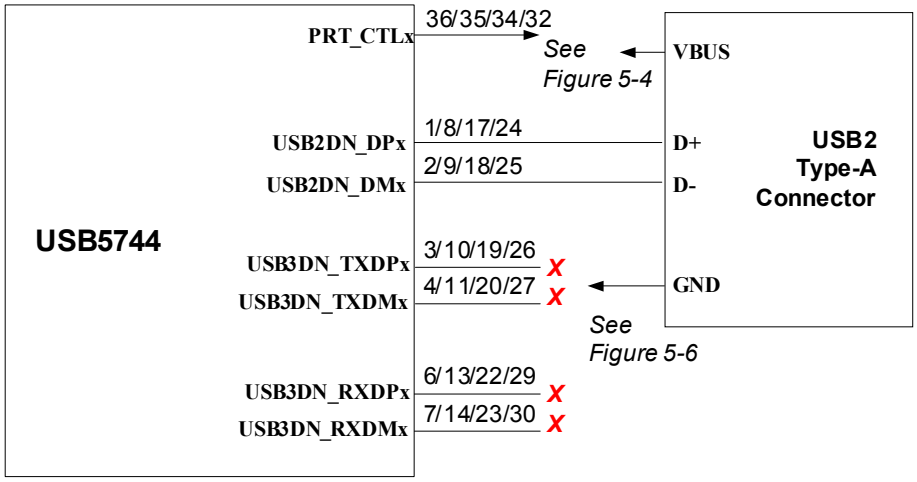

4.3 Disabling Downstream Ports

If a downstream port of the USB5744 is unused, it should be disabled. This can be achieved through hub configuration (I^2C or OTP), or through a port disable strap option.

If using the port disable strap option, the USB_DP2 and USB_DM2 signals should be pulled high to 3.3V. This connection can be made directly to the 3.3V power net, or through a pull-up resistor. All other signals related to the associated port may be floated.

© 2019 Microchip Technology Inc.

4.4 USB Protection

The use of external protection circuitry may be required to provide additional ESD protection beyond what is included in the hub IC. These are generally grouped into three categories:

- TVS protection diodes
  - ESD protection for IEC-61000-4-2 system level tests
- Application targeted protection ICs or galvanic isolation devices
  - DC overvoltage protection for short to battery protection
- Common-mode chokes
  - For EMI reduction

The USB5744 can be used in conjunction with these types of devices, but it is important to understand the negative effect on USB signal integrity that these devices may have and to select components accordingly and follow the implementation guidelines from the manufacturer of these devices. You may also use the following general guidelines for implementing these devices:

- Select only devices that are designed specifically for high-speed applications. Per the USB2.0 specification, a total of 5 pF is budgeted for connector, PCB traces, and protection circuitry. In a USB3.1 Gen 1 system ESD protection should add no more than 0.5 pF capacitance to the differential pairs.
- These devices should be placed as close to the USB connector as possible.
- Never branch the USB signals to reach protection devices. Always place the protection devices directly on top of the USB differential traces.
- The effectiveness of TVS devices depends heavily on effective grounding. Always ensure a very low impedance path to a large ground plane.
- Place TVS diodes on the same layer as the USB signal trace. Avoid vias or place vias behind the TVS device if possible.

4.4.1 ADDITIONAL PROTECTION OPTIONS FOR USB3 PINS

In addition to TVS diodes, some of the following may be implemented:

- Use decoupling capacitors on both the TX and RX differential pairs. Decoupling capacitors on the RX pairs are not required for operation but add some additional ESD immunity at a low cost.
- Use decoupling capacitors with high voltage ratings. 0.1 µF capacitors at 0402 sizes are widely available.
- A very small resistor of 0.3 Ohms to 0.5 Ohms may be placed in series with the decoupling capacitor (placed physically between the TVS diode and the decoupling capacitor) to help steer more of the ESD energy through the TVS diode. A resistor network (2-resistor/4-contact) in 0402 or 0201 size can be placed with very little impact to the differential routing of the signals.

Note: Microchip PHYBoost, VariSense, and High-Speed Disconnect Threshold adjustment configuration options are available for compensating the negative effects of these devices. These features can help overcome marginal failures. It is easier to determine the appropriate setting using laboratory experiments, such as USB eye diagram tests on physical hardware.

5.0 USB CONNECTORS

5.1 Upstream Port VBUS and VBUS_DET

The upstream port VBUS line must have no more than 10 uF of total capacitance connected.

The **VBUS_DET** pin is used by the USB5744 to detect the presence of a USB host. The USB host can also toggle the state of VBUS at any time to force a soft reset and re-connection of the USB5744.

It is permissible to tie **VBUS_DET** directly to 3.3V. However, this is not recommended as the ability to force a reset of the hub from the USB host VBUS control is lost.

If connecting the upstream port to standard USB Type-B, the recommended implementation is shown in Figure 5-1.

FIGURE 5-1: RECOMMENDED UPSTREAM PORT VBUS AND VBUS_DET CONNECTIONS

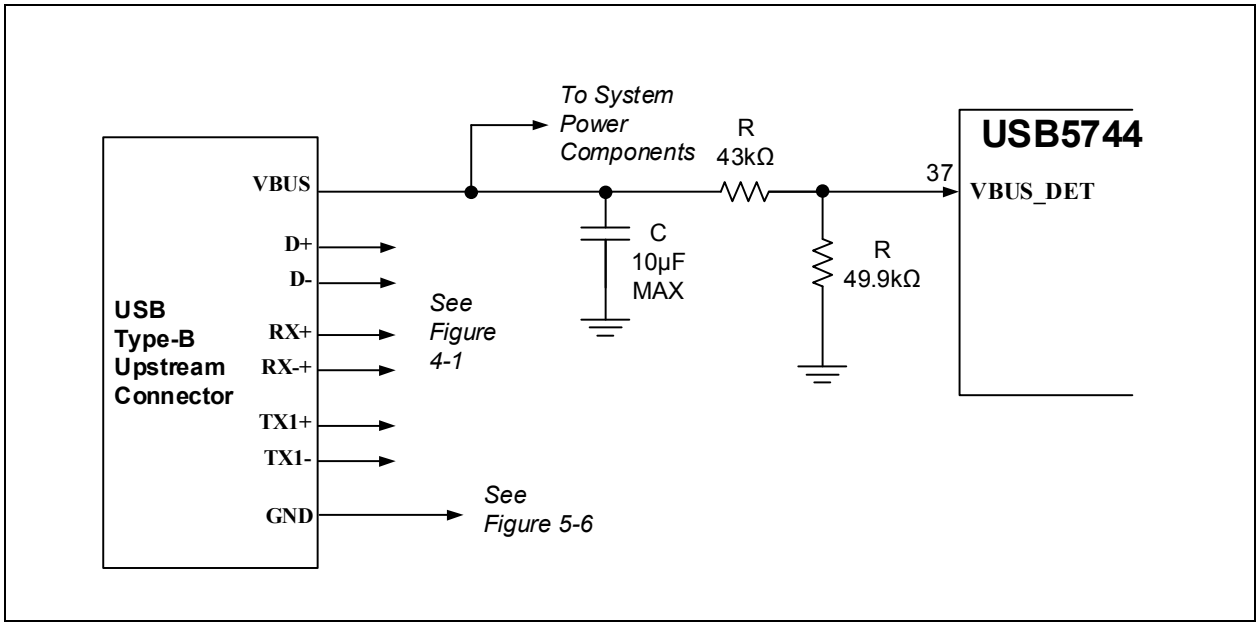

© 2019 Microchip Technology Inc.

If connecting the upstream port to basic USB Type-C port where VBUS never exceeds 5V, the recommended implementation is shown in Figure 5-2.

FIGURE 5-2: RECOMMENDED UPSTREAM PORT VBUS AND VBUS_DET CONNECTIONS FOR A BASIC TYPE-C PORT

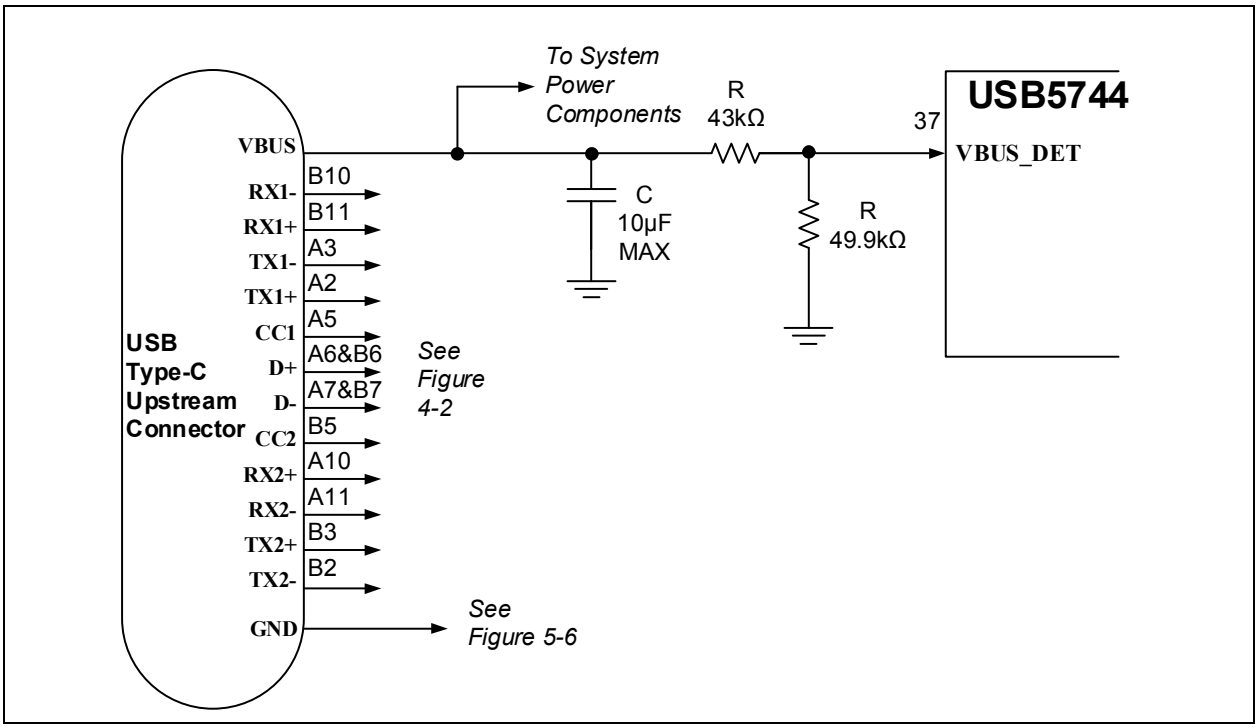

If connecting the upstream port to USB Type-C with USB Power Delivery support (where VBUS may be elevated above 5V), the recommended implementation is shown in Figure 5-3.

FIGURE 5-3: RECOMMENDED UPSTREAM PORT VBUS AND VBUS_DET CONNECTIONS FOR A FULL FEATURED TYPE-C PORT WITH POWER DELIVERY

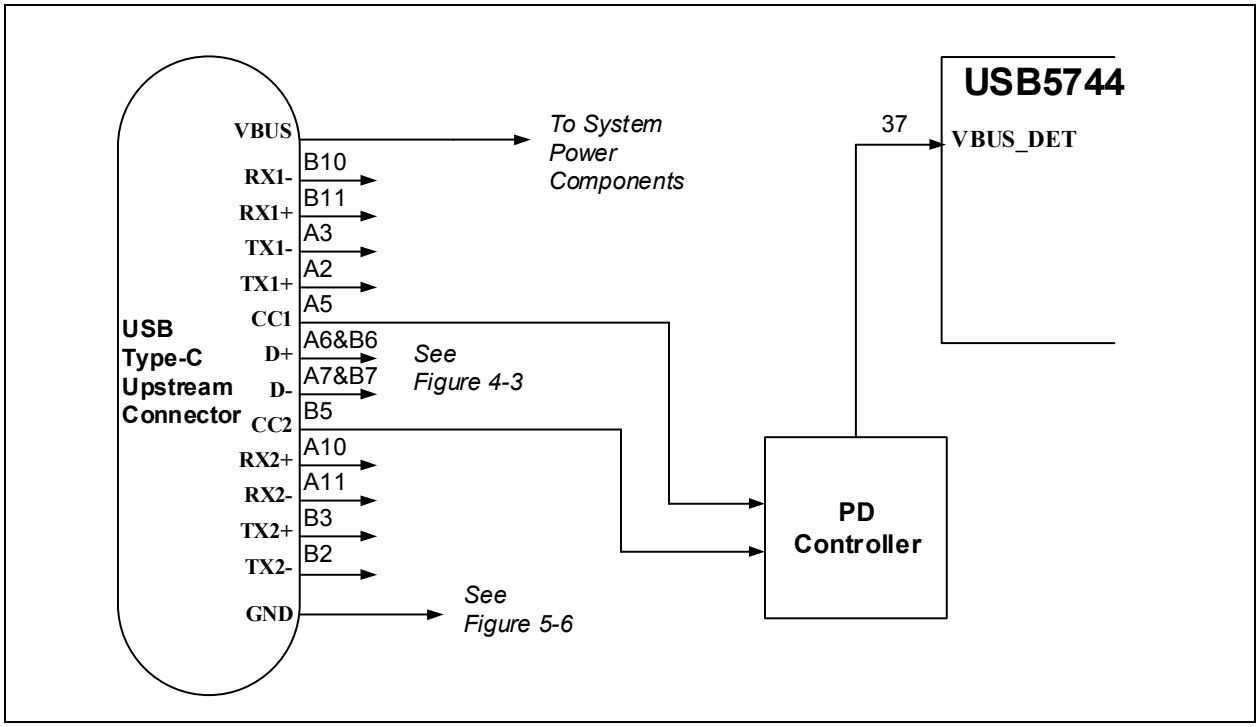

5.2 Downstream Port VBUS and PRTCTLx Connections for Standard Type-A Ports

The **PRT_CTLx** pin is a hybrid input/output pin which has the following states:

- PORT OFF: **PRT_CTLx** is an output and drives low. The **PRT_CTLx** pin will only transition to the PORT ON state through a specific command from the USB host.
- PORT ON: **PRT_CTLx** is an input with an internal weak pull-up enabled. The input buffer monitors for overcurrent events, which are indicated by the port power controller by pulling the **PRT_CTLx** line low. Once an overcurrent event is detected, the **PRT_CTLx** automatically moves to the PORT OFF state until the USB host can be notified of the overcurrent event.

When connecting the **PRT_CTLx** pin to a port power controller, the signal should be connected to both the enable and the fault indicator pins of the port power controller. Do not place an external pull-up resistor on the line.

The overcurrent detect debounce parameters are configurable and may be adjusted if required to operate properly with the selected port power controller.

© 2019 Microchip Technology Inc.

A typical downstream port Type-A implementation is shown in Figure 5-4

FIGURE 5-4: DOWNSTREAM PORT VBUS AND PRT_CTLX CONNECTIONS

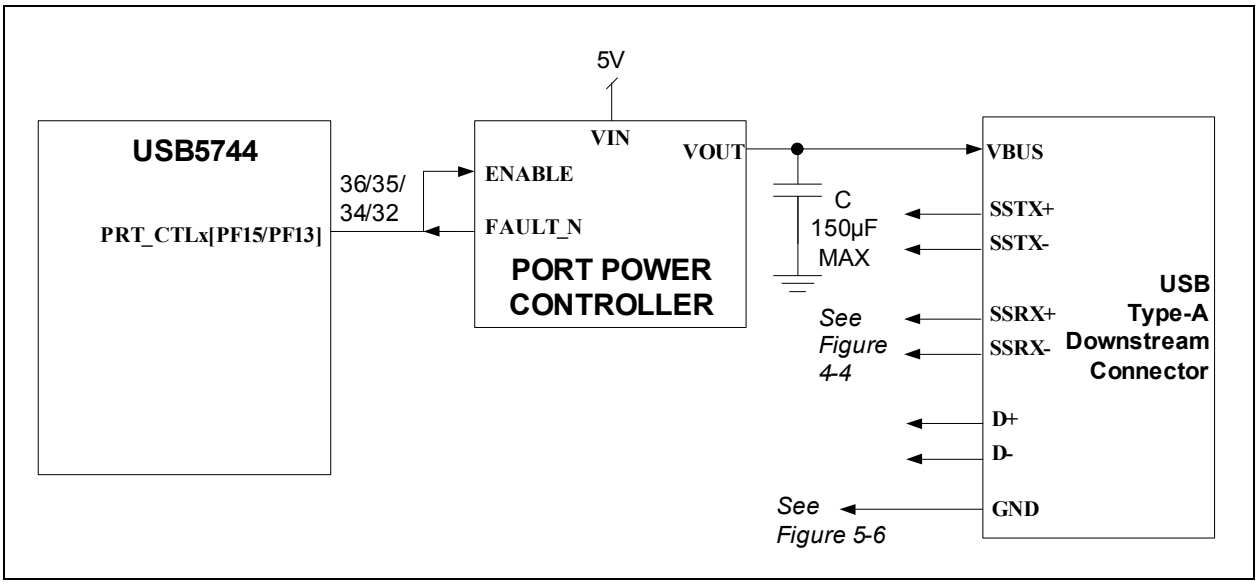

The implementation, as shown in Figure 5-4, assumes that the port power controller has an active-high enable input, and an active-low open-drain style fault indicator. External polarity inversion through buffers or FETs may be required if the port power controller has different I/O characteristics.

5.3 Downstream Port VBUS and PRTCTLx Connections for Type-C Ports

A typical Type-C implementation is shown in Figure 5-5. Specific details on how to connect the VBUS switch or DC/DC regulator should be obtained from the supplier of the Type-C/Power Delivery controller device.

FIGURE 5-5: DOWNSTREAM PORT VBUS AND PRT_CTL CONNECTIONS FOR TYPE-C PORT

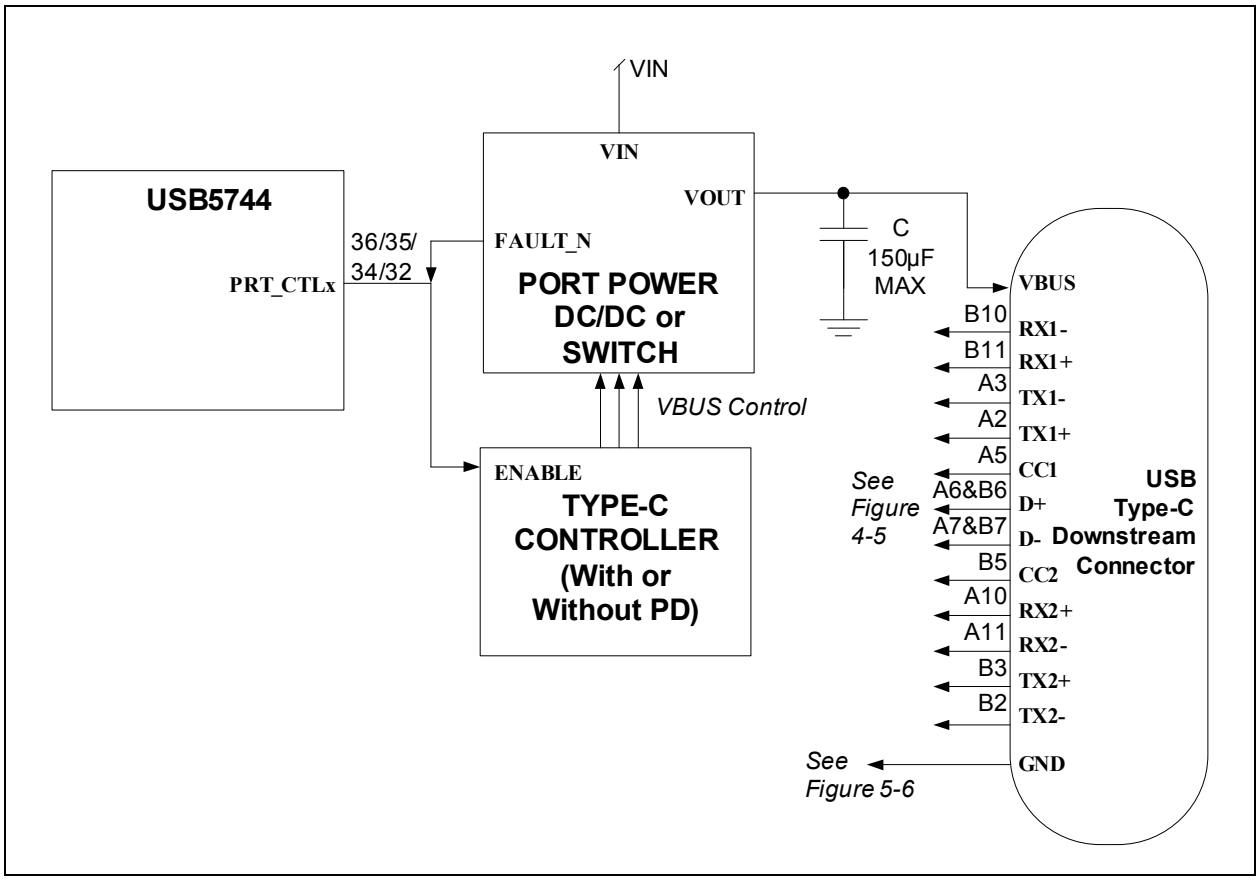

The implementation, as shown in Figure 5-5, assumes that the port power controller has an active-high enable input, and an active-low, open-drain style fault indicator. External polarity inversion through buffers or FETs may be required if the port power controller has different I/O characteristics.

© 2019 Microchip Technology Inc.

5.4 GND and EARTH Recommendations

The GND pins of the USB connector must be connected to the PCB with a low impedance path directly to a large GND plane.

The EARTH pins of the USB connector may be connected in one of two ways:

- [Recommended] To GND through a resistor and capacitor in parallel. An RC filter can help to decouple and minimize EMI between a PCB and a USB cable.
- Directly to the GND plane.

The recommended implementation is shown in Figure 5-6.

FIGURE 5-6: RECOMMENDED USB CONNECTOR GND AND EARTH CONNECTIONS

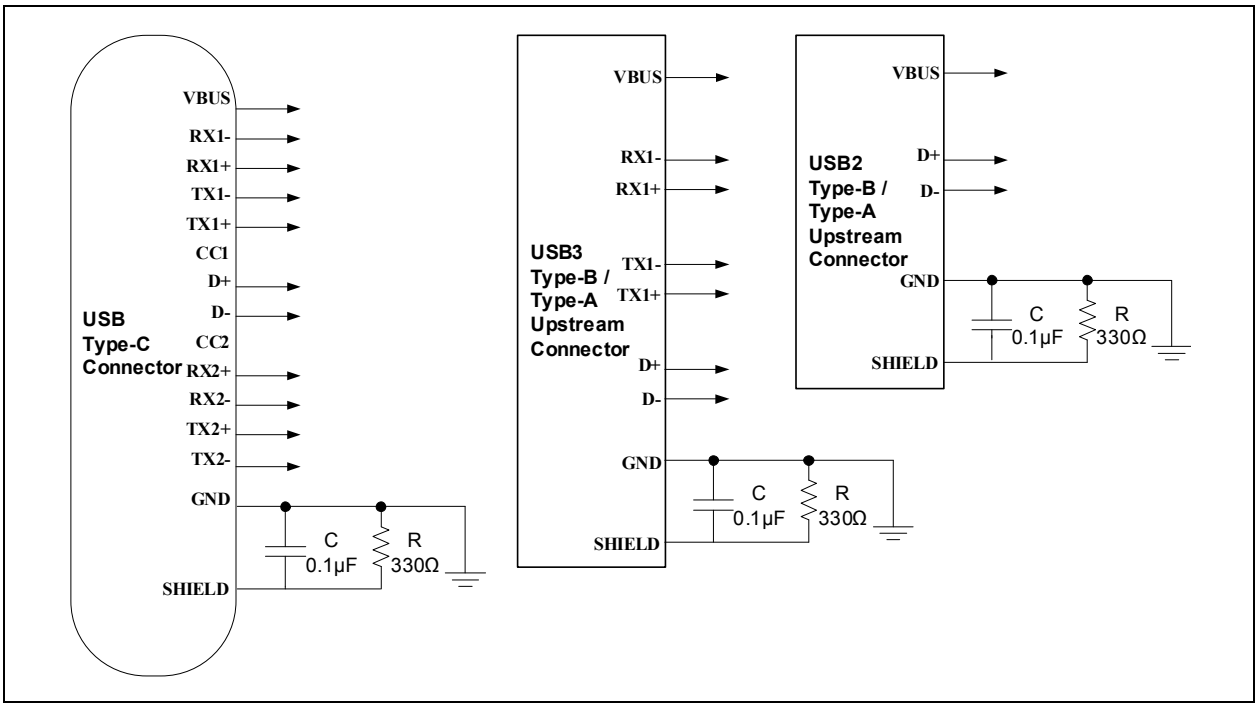

6.0 CLOCK CIRCUIT

6.1 Crystal or External Clock Connection

A 25.000 MHz (±50 ppm) reference clock is the source for the USB interface and for all other functions of the device (See Figure 6-1.) For exact specifications and tolerances, refer to the latest revision of the USB5744 data sheet.

- **XTALI** (pin 54) is the clock circuit input for the USB5744. This pin requires a capacitor to ground. One side of the crystal connects to this pin.
- **XTALO** (pin 53) is the clock circuit output for the USB5744. This pin requires a capacitor to ground. One side of the crystal connects to this pin.
- The crystal loading capacitor values are system dependent, based on the total C_L specifications of the crystal and the stray capacitance value. The PCB design, crystal, and layout all contribute to the characteristics of this circuit. A commonly used formula for calculating the appropriate physical C_1 and C_2 capacitor values is:
  - $C_L = ((C_{X1})(C_{X2}) / (C_{X1} + C_{X2}))$
  - Where: CL is the spec from the crystal datasheet, $C_{X1} = C_{stray} + C_1$, $C_{X2} = C_{stray} + C_2$
  - **Note:** C_{stray} is the stray/parasitic capacitance due to PCB layout. It can be assumed to be very small, in the 1-2 pF range, and then verified by physical experiments in the lab if PCB simulation tools are not available.
- Alternately, a 25.000 MHz, 3.3V clock oscillator may be used to provide the clock source for theUSB5734. When using a single-ended clock source, **XTALO** (pin 37) should be left floating as a No Connect (NC)

FIGURE 6-1: CRYSTAL AND OSCILLATOR CONNECTIONS

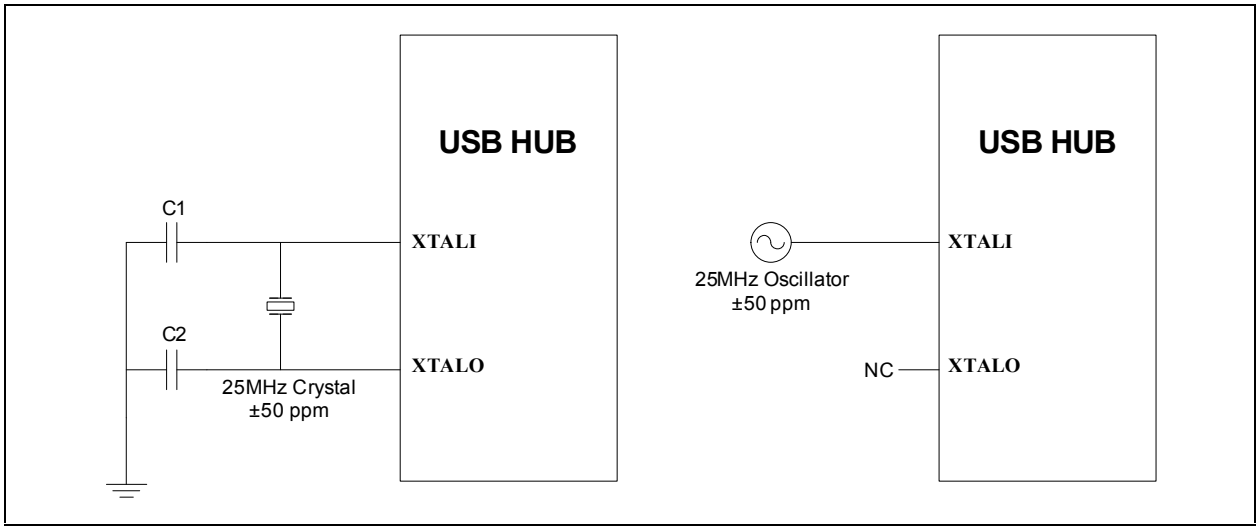

© 2019 Microchip Technology Inc.

7.0 POWER AND STARTUP

7.1 RBIAS Resistor

The RBIAS pin on the USB5744 must connect to ground through a 12 kΩ resistor with a tolerance of 1.0%. This is used to set up critical bias currents for the internal circuitry. This should be placed as close to the IC pin as possible, and be given a dedicated, low-impedance path to a ground plane.

7.2 Board Power Supplies

7.2.1 POWER RISE TIME

The power rail voltage and rise time should adhere to the supply rise time specification as defined in the USB5744 data sheet. If a monotonic/fast power rail rise cannot be assured, then the **RESET_N** signal should be controlled by a reset supervisor and only released when the power rail has reached a stable level.

7.2.2 CURRENT CAPABILITY

It is important to size the 5V and 3.3V power rails appropriately. The 5V power supply must be capable of supplying 500 mA (if BC1.2 is not enabled), 1.5A (if BC1.2 is enabled), or up to 3.0A (if the maximum Type-C current is enabled) to the USB downstream port VBUS without drooping below the minimum voltage permissible in the USB specification.

The 3.3V power supply must be able to supply enough power to the USB hub IC. It is recommend that 3.3V power rail be sized such that is able to supply the maximum power consumption specifications as displayed in the USB5744data sheet

The 1.2V power supply must be able to supply enough power to the USB hub IC. It is recommend that 1.2V power rail be sized such that it is able to supply the maximum power consumption specifications as displayed in the USB5744data sheet

7.3 Reset Circuit

RESET_N (pin XX) is an active-low reset input. This signal resets all logic and registers within the USB5744. A hardware reset (**RESET_N** assertion) is not required following power-up. Please refer to the latest copy of the *USB5744 Data Sheet* for reset timing requirements. Figure 7-1 shows a recommended reset circuit for powering up the USB5744 when reset is triggered by the power supply.

FIGURE 7-1: RESET TRIGGERED BY POWER SUPPLY

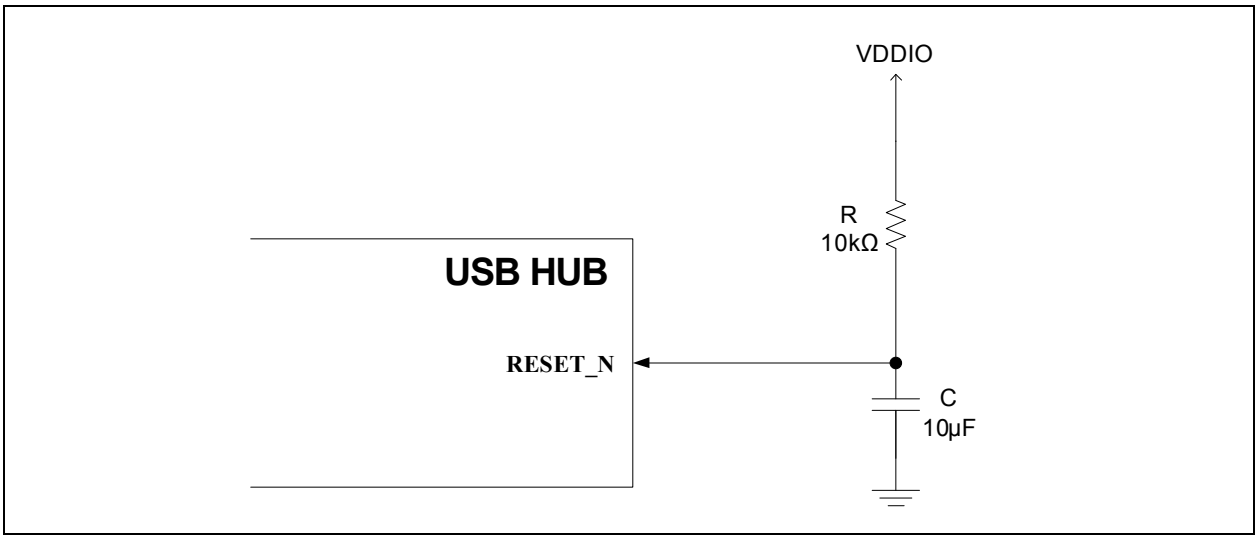

Figure 7-2 details the recommended reset circuit for applications where reset is driven by an external CPU/MCU. The reset out pin (RST_OUT_N) from the CPU/MCU provides the warm reset after power-up.

FIGURE 7-2: RESET CIRCUIT INTERFACE WITH CPU/MCU RESET OUTPUT

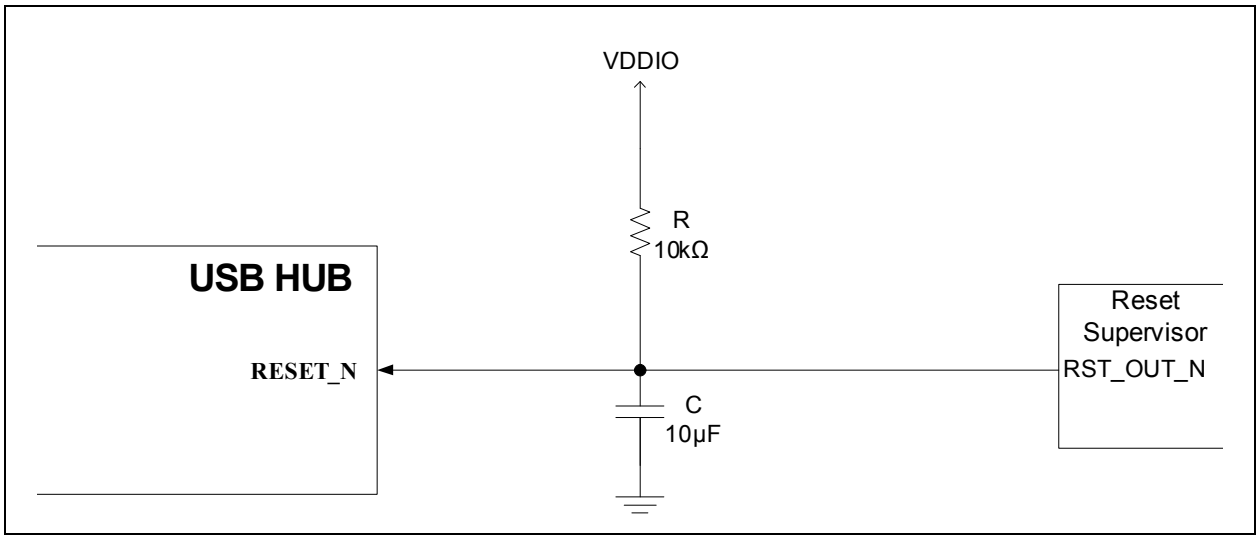

© 2019 Microchip Technology Inc.

8.0 EXTERNAL SPI MEMORY

8.1 SPI Operation Summary

By default, the USB5744 executes firmware from an internal read only memory (ROM). The USB5744 supports optional firmware execution from an external SPI Flash device. An SPI Flash is only required if a custom firmware is required for the application.

The SPI interface can operate at 60 MHz or 30 MHz.

The SPI interface can operate in Dual mode or Quad mode.

The firmware image can be executed in one of two ways:

1. **Execute in place:** firmware is continuously executed directly from the SPI Flash, and interface is constantly active.
2. **Execute in internal SRAM:** firmware is loaded into the hub's internal SRAM and executed internally. This may only be supported if the firmware image is smaller than the hub's SRAM size.

Note:	All firmware images are developed, compiled, tested, and provided by Microchip. The SPI interface speed is an OTP-configurable option, and only speeds which were specifically tested with the firmware image should be selected. The standard speed under which firmware images are developed and tested under is 60 MHz. The execution method is configured with the firmware image itself and cannot be changed via configuration.

8.2 Compatible SPI Flash Devices

Microchip recommend SST brand SPI Flash devices. Microchip has verified compatibility of the following list of SPI Flash devices:

- SST26F016B
- SST26F032B
- SST26VF064B
- SST25VF064C
- SST25VF040C
- SST25VF040B
- SST25VF020B
- SST25VF080B

Other SPI Flash devices may be used, provided they meet the following minimum requirements:

- 30 MHz or 60 MHz operation
- Mode 0 or Mode 3
- 256 kB or larger memory
- Utilize same OpCode commands as devices in above list of compatible devices
- Dual mode or Quad mode operation

© 2019 Microchip Technology Inc.

8.3 SPI Connection Diagrams

If a Dual SPI Flash device is used, the recommended schematic connections are shown in Figure 8-1.

FIGURE 8-1: DUAL SPI FLASH CONNECTIONS

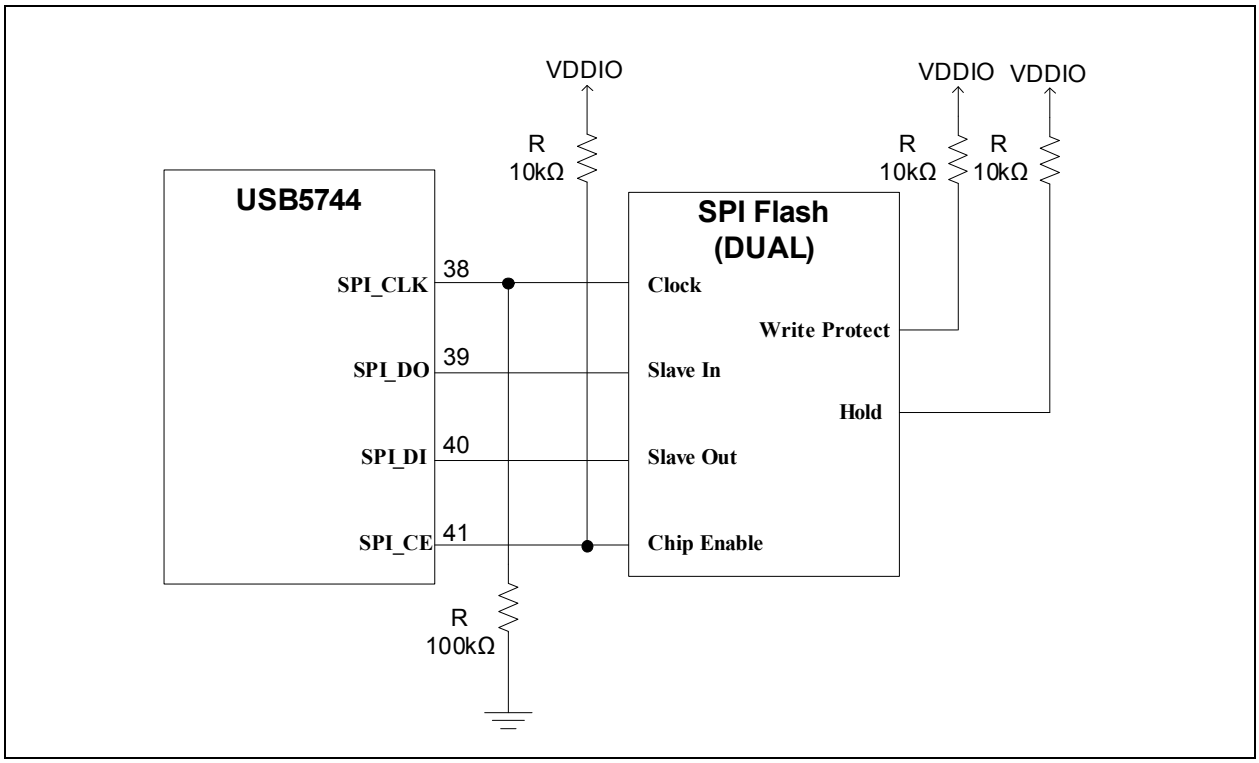

© 2019 Microchip Technology Inc.

If an SPI Flash device is not used, the recommended schematic connections are shown in Figure 8-2. Some of the SPI pins become configuration straps when an SPI Flash is not connected. A configuration strap option must be selected, and these pins cannot be floated.

FIGURE 8-2: RECOMMENDED CONNECTIONS IF SPI FLASH IS NOT USED

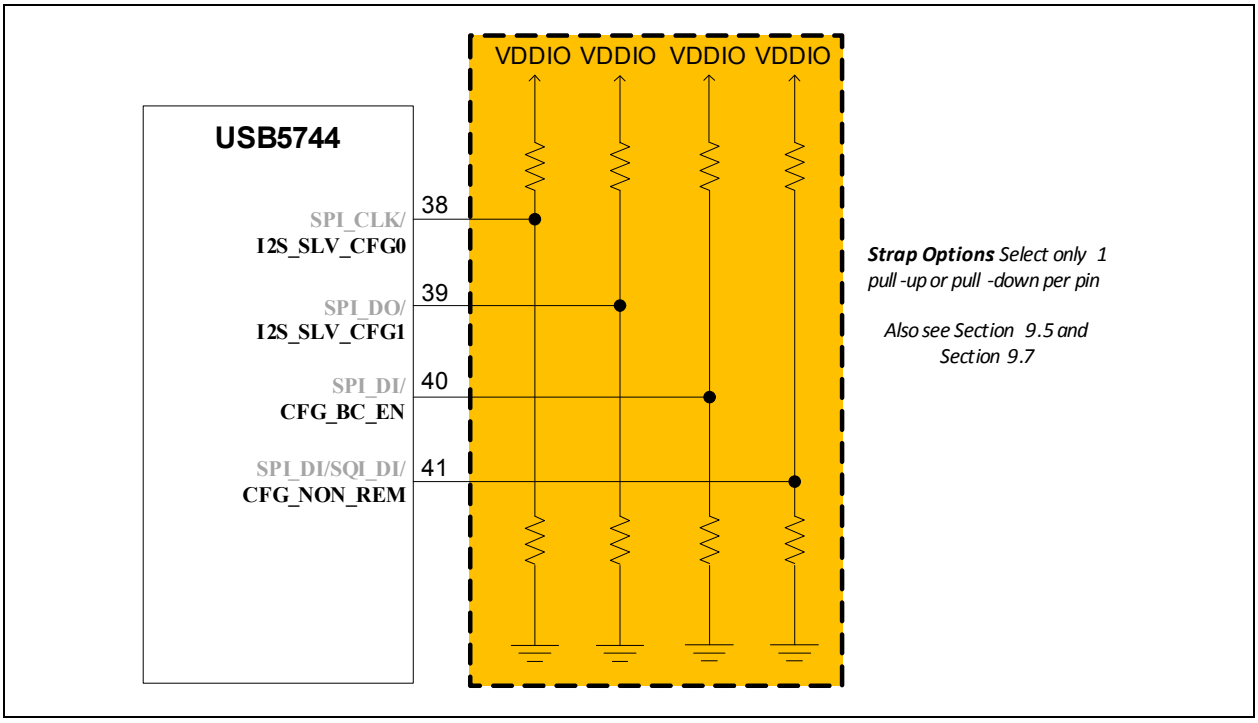

9.0 MISCELLANEOUS

9.1 I²C/SMBus Connections

The USB5744 has one IC slave interface. This is described in Table 9-1.

TABLE 9-1: I²C/SMBUS PINS

Pin	Name	Role	Configuration Requirements
39	SPI_DO/SMDAT	I²C Slave Data	Pull-up resistors detected on pins at start-up, and no external SPI FW image is present.
38	SPI_CLK/SMCLK	I²C Slave Clock	Pull-up resistors detected on pins at start-up, and no external SPI FW image is present.

9.1.1 SLAVE INTERFACE

The USB5744 may be configured by an embedded SOC/MCU during both the start-up and runtime stages. Pull-up resistors must be detected on the **SPI_DO/SMDAT** and **SPI_CLK/SMDAT** pins by the hub at start-up in order for the I²C/SMBus slave interface to become active. The interface command specification and configuration register set are described in full in *AN1903 Configuration Options for the USB5734, USB5744 and USB5742*.

Typically, a pull-up resistor of 1 kΩ to 10 kΩ is sufficient, depending on the interface speed and total capacitance on I²C tree.

A pull-up voltage of 1.8V to 3.3V is supported.

Note:	If I²C/SMBus pull-up resistors are detected by the USB5744 at start-up, the hub will wait indefinitely to be configured by the attached I²C/SMBus master. For early prototyping, it may be necessary to physically remove the pull-up resistors until the I²C/SMBus master is fully operational and able to properly configure the hub at start-up.

9.2 FlexConnect

The FlexConnect feature allows the USB2 and USB3 host role to be re-assigned to any of the downstream ports in the hub. This feature is highly implementation specific and usually has numerous hardware design ramifications. If the FlexConnect feature is required in any specific application, it is recommended to reach out to a Microchip support representative early on in the design cycle to discuss the options available.

The FlexConnect feature and design guidelines are further explained in *AN1700 – FlexConnect Applications.*

9.3 Non-Removable Port Setting

In a typical USB5744 application, downstream Port 1 is routed to a user-accessible USB connector, and hence the downstream port should be configured as a removable port.

The USB5744 has a configuration strap option, **CFG_NON_REM**, which can be used to set the default configuration for Port 1. This is located on pin 4541. The strap setting is sampled one time at start-up. A configuration strap option must be selected unless the hub firmware is being executed from an external SPI flash device. These are described in Table 9-2.

© 2019 Microchip Technology Inc.

TABLE 9-2: CFG_NON_REM

Setting	Effect
200 kΩ pull-down to GND	All ports removable (recommended for most USB5744applications)
200 kΩ pull-up to 3.3V	Port 1 is non-removable. A valid selection only if Port 1 is connected directly to an embedded USB device.
10 kΩ pull-down to GND	Ports 1 and 2 are non-removable. A valid selection only if Ports 1 and 2 are connected directly to embedded USB devices.
10 kΩ pull-up to 3.3V	Ports 1, 2, and 3 are non-removable. A valid selection only if Ports 1, 2 and 3 are connected directly to embedded USB devices.
10Ω pull-down to GND	Ports 1, 2, 3, and 4 are non-removable. A valid selection only if Ports 1, 2, 3, and 4 are connected directly to embedded USB devices.

The following guidelines can be used to determine which setting to use:

- If the port is routed to a user-accessible USB connector, it is ***removable***.
- If the port is routed to a permanently attached an embedded USB device on the same PCB, or non-user-accessible wiring or cable harness, it is ***non-removable***.

Note: The removable/non-removable device settings do not impact the operation of the hub in any way. The settings only modify select USB descriptors which the USB host may use to understand if a port is a user-accessible port, or if the device is a permanently attached device. Under standard operating conditions, the USB host may or may not modify its operation based upon this information. Certain USB compliance tests are impacted by this setting, so designs which must undergo USB compliance testing and certification must have correct configuration settings.

9.4 Self-Powered/Bus-Powered Settings

In a typical USB5744application, the hub should be configured as self-powered, which is the default configuration setting.

The following guidelines can be used to determine which settings to use:

- If the entire system (hub included) is powered completely from the upstream USB connector's VBUS pin and the system is designed to operate using standard USB cabling and any standard USB host, then the hub system is ***bus-powered***.
- If the entire system (hub included) is always powered by a separate power connector, then the hub system is ***self-powered***.
- If the hub included is part of a larger embedded system with fixed cabling and a fixed USB host, then the hub system is most likely ***self-powered*** (even if all of the power is derived from the upstream USB connector's VBUS pin).

Note: The self-powered/bus-powered device settings do not impact the operation of the hub in any way. The settings only modify select USB descriptors which the USB host will use to budget power accordingly. Since a standard USB2.0 port is required to supply 500 mA to the downstream port, a self-powered hub and all of its downstream ports must continue to operate within that 500 mA budget. A USB host will typically limit the downstream ports of a self-powered hub to 100 mA. Any device which connects to a self-powered hub that declares it needs more than 100 mA will be prevented from operating by the USB host.

9.5 Battery Charging Settings

The USB5744 hub includes built-in Dedicated Charging Port (DCP), Charging Downstream Port (CDP), and vendor-specific (SE1) battery charging support.

The USB5744 has a configuration strap option, **CFG_BC_EN**, which can be used to set the default configuration for Port 1. This is located on pin 40. The strap setting is sampled one time at start-up. A configuration strap option must be selected unless the hub firmware is being executed from an external SPI flash device. The configuration strap options are described in Table 9-3.

TABLE 9-3: CFG_BC_EN

Setting	Effect	Additional Notes
200k pull-down to GND	Port 1 BC disabled	Battery Charging is not enabled. Select this option if configuration will be done in hub OTP, via I^2C/SMBus, or by external FW in SPI Flash. If SE1 charging is required, this strap option should be selected and SE1 must be enabled in hub OTP, via I^2C/SMBus, or by external FW in SPI Flash.
200k pull-up to 3.3V	Port 1 BC enabled	Battery Charging is enabled. When no USB host is present (VBUS_DET = 0), downstream Port 1 operates in Dedicated Charging Port mode (DCP mode). When a USB host is present (VBUS_DET = 1) and the USB host has commanded the hub to enable port power, downstream Port 1 operates in Charging Downstream Port mode (CDP mode).
10 kΩ pull-down to GND	Port 1 and 2 BC enabled	Battery Charging is enabled. When no USB host is present (VBUS_DET = 0), downstream Ports 1 and 2 operate in Dedicated Charging Port mode (DCP mode). When a USB host is present (VBUS_DET = 1) and the USB host has commanded the hub to enable port power, downstream Ports 1 and 2 operate in Charging Downstream Port mode (CDP mode).
10 kΩ pull-up to 3.3V	Port 1, 2, and 3 BC enabled	Battery Charging is enabled. When no USB host is present (VBUS_DET = 0), downstream Ports 1, 2, and 3 operate in Dedicated Charging Port mode (DCP mode). When a USB host is present (VBUS_DET = 1) and the USB host has commanded the hub to enable port power, downstream Ports 1, 2, and 3 operate in Charging Downstream Port mode (CDP mode).
10Ω pull-down to GND	Port 1, 2, 3, and 4 BC enabled	Battery Charging is enabled. When no USB host is present (VBUS_DET = 0), downstream Ports 1, 2, 3, and 4 operate in Dedicated Charging Port mode (DCP mode). When a USB host is present (VBUS_DET = 1) and the USB host has commanded the hub to enable port power, downstream Ports 1, 2, 3, and 4 operate in Charging Downstream Port mode (CDP mode).

Note: The vendor-specific SE1 charging mode uses the USB data lines to communicate charging capability. Hence, SE1 can only be active when no USB host is present. Additional vendor-specific charging modes exist for charging at elevated current levels when an active data connection is also present. This is handled by vendor-specific USB protocol between the USB host and the device. The USB5744 supports these vendor-specific protocol exchanges. These vendor-specific command specifications must be obtained from the respective device vendors.

© 2019 Microchip Technology Inc.

10.0 HARDWARE CHECKLIST SUMMARY

TABLE 10-1: HARDWARE DESIGN CHECKLIST

Section	Check	Explanation	√	Notes
Section 2.0, "General Considerations"	Section 2.1, "Pin Check"	Verify that the pins match the data sheet.		
	Section 2.2, "Ground"	Verify that the grounds are tied together.		
	Section 2.3, "USB-IF Compliant USB Connectors"	Verify that USB-IF compliant USB connectors with an assigned TID are used in the design (If USB compliance is required for the design.).		
Section 3.0, "Power"	Section 3.1, "Power and Bypass Capacitance"	• Ensure **VDD33** is in the range 3.0V to 3.6V and a 0.1 µF capacitor is on each pin • Ensure **VDD12** is in the range 1.08V to 1.32V and a 0.1 µF capacitor is on each pin		
Section 4.0, "USB Signals"	Section 4.1, "Upstream Port USB Signals"	Verify that the USB data pins are correctly routed to the USB connectors.		
	Section 4.2, "Downstream Port USB Signals"	Verify that the USB data pins are correctly routed to the USB connectors.		
	Section 4.3, "Disabling Downstream Ports"	If any of the USB ports are unused, ensure they are properly disabled via pin strap. If pin strapping is not used, other methods may be used such as I^2C/SMBus configuration or OTP configuration.		
	Section 4.4, "USB Protection"	Verify that ESD/EMI protection devices are designed specifically for high-speed data applications and that the combined parasitic capacitance the protection devices, USB traces, and USB connector do not exceed 5 pF on each USB2 trace. Protection devices on USB3 traces should not add more than 0.5 pF on each line.		
Section 5.0, "USB Connectors"	Section 5.1, "Upstream Port VBUS and VBUS_DET"	Verify that the Upstream Port VBUS has no more than 10 uF capacitance and that the VBUS signal is properly divided down to a 3.3V signal and connected to the **VBUS_DET** pin of the hub.		
	Section 5.2, "Downstream Port VBUS and PRTCTLx Connections for Standard Type-A Ports"	Verify that for any downstream Type-A ports, the **PRT_CTLx** pins are properly connected to both the 'enable' pin of the downstream port power controller and the fault indicator output of the port power controller.		
	Section 5.3, "Downstream Port VBUS and PRTCTLx Connections for Type-C Ports"	Verify that for any downstream Type-C ports, the **PRT_CTLx** pins are properly connected to both the 'enable' pin of the downstream Type-C port controller and the fault indicator output of the port switch or DC/DC regulator.		
	Section 5.4, "GND and EARTH Recommendations"	Verify that the USB connector is properly connected to PCB ground on both the GND pins and the SHIELD pins.		
Section 6.0, "Clock Circuit"	Section 6.1, "Crystal or External Clock Connection"	Confirm the crystal or clock is 25.000 MHz (±50 ppm).		

© 2019 Microchip Technology Inc.

TABLE 10-1: HARDWARE DESIGN CHECKLIST (CONTINUED)

Section	Check	Explanation	√	Notes
Section 7.0, "Power and Startup"	Section 7.1, "RBIAS Resistor"	Confirm that a 12 kΩ 1% resistor is connected between the **RBIAS** pin and PCB ground.		
	Section 7.2, "Board Power Supplies"	Verify that the board power supplies deliver 3.0V to 3.6V and 1.08V to 1.32V to the hub power rails, and that the power-on rise time meets the requirement of the hub as defined in the data sheet.		
	Section 7.3, "Reset Circuit"	Ensure that the **RESET_N** signal has an external pull-up resistor, or is otherwise properly controlled by an external SOC, MCU, or Reset supervisor device.		
Section 8.0, "External SPI Memory"	Section 8.1, "SPI Operation Summary"	Determine if a custom SPI FW image is required, and which mode of operation the selected SPI Flash device must support.		
	Section 8.2, "Compatible SPI Flash Devices"	Ensure the selected SPI Flash device is compatible with the hub.		
	Section 8.3, "SPI Connection Diagrams"	Verify that the SPI Flash is connected according to the diagram in Figure 8-1. Follow Figure 8-2 if no SPI Flash is connected in the design.		
Section 9.0, "Miscellaneous"	Section 9.1, "I2C/SMBus Connections"	If the USB to I^2C/SMBus slave interface is implemented, ensure that appropriate pull-up resistors are connected and that the connections to the I^2C/SMBus master are correct.		
	Section 9.2, "FlexConnect"	If using the FlexConnect feature, refer to *AN1700 FlexConnect Applications* and contact Microchip support for design and implementation assistance.		
	Section 9.3, "Non-Removable Port Setting"	Verify that the CFG_NON_REM configuration strap is set per application requirements.		
	Section 9.4, "Self-Powered/Bus-Powered Settings"	Verify the application requirements for Self-Powered or Bus-Powered operation.		
	Section 9.5, "Battery Charging Settings"	Verify that the CFG_BC_EN configuration strap is set per application requirements.		

© 2019 Microchip Technology Inc.

APPENDIX A: REVISION HISTORY

TABLE A-1: REVISION HISTORY

Revision Level & Date	Section/Figure/Entry	Correction
DS00002970A (03-28-2019)	Initial release	

THE MICROCHIP WEBSITE

Microchip provides online sup via our WWW site at www.microchip.com. This website is used as a means to make files and information easily available to customers. Accessible by using your favorite Internet browser, the website contains the following information:

- **Product Sup** – Data sheets and errata, application notes and sample programs, design resources, user's guides and hardware sup documents, latest software releases and archived software
- **General Technical Sup** – Frequently Asked Questions (FAQ), technical sup requests, online discussion groups, Microchip consultant program member listing
- **Business of Microchip** – Product selector and ordering guides, latest Microchip press releases, listing of seminars and events, listings of Microchip sales offices, distributors and factory representatives

CUSTOMER CHANGE NOTIFICATION SERVICE

Microchip's customer notification service helps keep customers current on Microchip products. Subscribers will receive e-mail notification whenever there are changes, updates, revisions or errata related to a specified product family or development tool of interest.

To register, access the Microchip website at www.microchip.com. Under "Sup", click on "Customer Change Notification" and follow the registration instructions.

CUSTOMER SUPPORT

Users of Microchip products can receive assistance through several channels:

- Distributor or Representative
- Local Sales Office
- Field Application Engineer (FAE)
- Technical Sup

Customers should contact their distributor, representative or Field Application Engineer (FAE) for sup. Local sales offices are also available to help customers. A listing of sales offices and locations is included in the back of this document.

Technical sup is available through the website at: http://microchip.com/support

© 2019 Microchip Technology Inc.

Note the following details of the code protection feature on Microchip devices:

- Microchip products meet the specification contained in their particular Microchip Data Sheet.
- Microchip believes that its family of products is one of the most secure families of its kind on the market today, when used in the intended manner and under normal conditions.
- There are dishonest and possibly illegal methods used to breach the code protection feature. All of these methods, to our knowledge, require using the Microchip products in a manner outside the operating specifications contained in Microchip's Data Sheets. Most likely, the person doing so is engaged in theft of intellectual property.
- Microchip is willing to work with the customer who is concerned about the integrity of their code.
- Neither Microchip nor any other semiconductor manufacturer can guarantee the security of their code. Code protection does not mean that we are guaranteeing the product as "unbreakable."

Code protection is constantly evolving. We at Microchip are committed to continuously improving the code protection features of our products. Attempts to break Microchip's code protection feature may be a violation of the Digital Millennium Copyright Act. If such acts allow unauthorized access to your software or other copyrighted work, you may have a right to sue for relief under that Act.

Information contained in this publication regarding device applications and the like is provided only for your convenience and may be superseded by updates. It is your responsibility to ensure that your application meets with your specifications. MICROCHIP MAKES NO REPRESENTATIONS OR WARRANTIES OF ANY KIND WHETHER EXPRESS OR IMPLIED, WRITTEN OR ORAL, STATUTORY OR OTHERWISE, RELATED TO THE INFORMATION, INCLUDING BUT NOT LIMITED TO ITS CONDITION, QUALITY, PERFORMANCE, MERCHANTABILITY OR FITNESS FOR PURPOSE**.** Microchip disclaims all liability arising from this information and its use. Use of Microchip devices in life support and/or safety applications is entirely at the buyer's risk, and the buyer agrees to defend, indemnify and hold harmless Microchip from any and all damages, claims, suits, or expenses resulting from such use. No licenses are conveyed, implicitly or otherwise, under any Microchip intellectual property rights unless otherwise stated.

Trademarks

The Microchip name and logo, the Microchip logo, AnyRate, AVR, AVR logo, AVR Freaks, BeaconThings, BitCloud, CryptoMemory, CryptoRF, dsPIC, FlashFlex, flexPWR, Heldo, JukeBlox, KEELOQ, KEELOQ logo, Kleer, LANCheck, LINK MD, maXStylus, maXTouch, MediaLB, megaAVR, MOST, MOST logo, MPLAB, OptoLyzer, PIC, picoPower, PICSTART, PIC32 logo, Prochip Designer, QTouch, RightTouch, SAM-BA, SpyNIC, SST, SST Logo, SuperFlash, tinyAVR, UNI/O, and XMEGA are registered trademarks of Microchip Technology Incorporated in the U.S.A. and other countries.

ClockWorks, The Embedded Control Solutions Company, EtherSynch, Hyper Speed Control, HyperLight Load, IntelliMOS, mTouch, Precision Edge, and Quiet-Wire are registered trademarks of Microchip Technology Incorporated in the U.S.A.

Adjacent Key Suppression, AKS, Analog-for-the-Digital Age, Any Capacitor, AnyIn, AnyOut, BodyCom, chipKIT, chipKIT logo, CodeGuard, CryptoAuthentication, CryptoCompanion, CryptoController, dsPICDEM, dsPICDEM.net, Dynamic Average Matching, DAM, ECAN, EtherGREEN, In-Circuit Serial Programming, ICSP, Inter-Chip Connectivity, JitterBlocker, KleerNet, KleerNet logo, Mindi, MiWi, motorBench, MPASM, MPF, MPLAB Certified logo, MPLIB, MPLINK, MultiTRAK, NetDetach, Omniscient Code Generation, PICDEM, PICDEM.net, PICkit, PICtail, PureSilicon, QMatrix, RightTouch logo, REAL ICE, Ripple Blocker, SAM-ICE, Serial Quad I/O, SMART-I.S., SQI, SuperSwitcher, SuperSwitcher II, Total Endurance, TSHARC, USBCheck, VariSense, ViewSpan, WiperLock, Wireless DNA, and ZENA are trademarks of Microchip Technology Incorporated in the U.S.A. and other countries.

SQTP is a service mark of Microchip Technology Incorporated in the U.S.A.

Silicon Storage Technology is a registered trademark of Microchip Technology Inc. in other countries.

GestIC is a registered trademark of Microchip Technology Germany II GmbH & Co. KG, a subsidiary of Microchip Technology Inc., in other countries.

All other trademarks mentioned herein are property of their respective companies.

© 2019, Microchip Technology Incorporated, All Rights Reserved.

ISBN: 978-1-5224-4341-4

QUALITY MANAGEMENT SYSTEM
CERTIFIED BY DNV
═ ISO/TS 16949 ═

Microchip received ISO/TS-16949:2009 certification for its worldwide headquarters, design and wafer fabrication facilities in Chandler and Tempe, Arizona; Gresham, Oregon and design centers in California and India. The Company's quality system processes and procedures are for its PIC® MCUs and dsPIC® DSCs, KEELOQ® code hopping devices, Serial EEPROMs, microperipherals, nonvolatile memory and analog products. In addition, Microchip's quality system for the design and manufacture of development systems is ISO 9001:2000 certified.

Worldwide Sales and Service

AMERICAS

Corporate Office
2355 West Chandler Blvd.
Chandler, AZ 85224-6199
Tel: 480-792-7200
Fax: 480-792-7277
Technical Support:
http://www.microchip.com/support
Web Address:
www.microchip.com

Atlanta
Duluth, GA
Tel: 678-957-9614
Fax: 678-957-1455

Austin, TX
Tel: 512-257-3370

Boston
Westborough, MA
Tel: 774-760-0087
Fax: 774-760-0088

Chicago
Itasca, IL
Tel: 630-285-0071
Fax: 630-285-0075

Dallas
Addison, TX
Tel: 972-818-7423
Fax: 972-818-2924

Detroit
Novi, MI
Tel: 248-848-4000

Houston, TX
Tel: 281-894-5983

Indianapolis
Noblesville, IN
Tel: 317-773-8323
Fax: 317-773-5453
Tel: 317-536-2380

Los Angeles
Mission Viejo, CA
Tel: 949-462-9523
Fax: 949-462-9608
Tel: 951-273-7800

Raleigh, NC
Tel: 919-844-7510

New York, NY
Tel: 631-435-6000

San Jose, CA
Tel: 408-735-9110
Tel: 408-436-4270

Canada - Toronto
Tel: 905-695-1980
Fax: 905-695-2078

ASIA/PACIFIC

Australia - Sydney
Tel: 61-2-9868-6733

China - Beijing
Tel: 86-10-8569-7000

China - Chengdu
Tel: 86-28-8665-5511

China - Chongqing
Tel: 86-23-8980-9588

China - Dongguan
Tel: 86-769-8702-9880

China - Guangzhou
Tel: 86-20-8755-8029

China - Hangzhou
Tel: 86-571-8792-8115

China - Hong Kong SAR
Tel: 852-2943-5100

China - Nanjing
Tel: 86-25-8473-2460

China - Qingdao
Tel: 86-532-8502-7355

China - Shanghai
Tel: 86-21-3326-8000

China - Shenyang
Tel: 86-24-2334-2829

China - Shenzhen
Tel: 86-755-8864-2200

China - Suzhou
Tel: 86-186-6233-1526

China - Wuhan
Tel: 86-27-5980-5300

China - Xian
Tel: 86-29-8833-7252

China - Xiamen
Tel: 86-592-2388138

China - Zhuhai
Tel: 86-756-3210040

ASIA/PACIFIC

India - Bangalore
Tel: 91-80-3090-4444

India - New Delhi
Tel: 91-11-4160-8631

India - Pune
Tel: 91-20-4121-0141

Japan - Osaka
Tel: 81-6-6152-7160

Japan - Tokyo
Tel: 81-3-6880- 3770

Korea - Daegu
Tel: 82-53-744-4301

Korea - Seoul
Tel: 82-2-554-7200

Malaysia - Kuala Lumpur
Tel: 60-3-7651-7906

Malaysia - Penang
Tel: 60-4-227-8870

Philippines - Manila
Tel: 63-2-634-9065

Singapore
Tel: 65-6334-8870

Taiwan - Hsin Chu
Tel: 886-3-577-8366

Taiwan - Kaohsiung
Tel: 886-7-213-7830

Taiwan - Taipei
Tel: 886-2-2508-8600

Thailand - Bangkok
Tel: 66-2-694-1351

Vietnam - Ho Chi Minh
Tel: 84-28-5448-2100

EUROPE

Austria - Wels
Tel: 43-7242-2244-39
Fax: 43-7242-2244-393

Denmark - Copenhagen
Tel: 45-4450-2828
Fax: 45-4485-2829

Finland - Espoo
Tel: 358-9-4520-820

France - Paris
Tel: 33-1-69-53-63-20
Fax: 33-1-69-30-90-79

Germany - Garching
Tel: 49-8931-9700

Germany - Haan
Tel: 49-2129-3766400

Germany - Heilbronn
Tel: 49-7131-67-3636

Germany - Karlsruhe
Tel: 49-721-625370

Germany - Munich
Tel: 49-89-627-144-0
Fax: 49-89-627-144-44

Germany - Rosenheim
Tel: 49-8031-354-560

Israel - Ra'anana
Tel: 972-9-744-7705

Italy - Milan
Tel: 39-0331-742611
Fax: 39-0331-466781

Italy - Padova
Tel: 39-049-7625286

Netherlands - Drunen
Tel: 31-416-690399
Fax: 31-416-690340

Norway - Trondheim
Tel: 47-7288-4388

Poland - Warsaw
Tel: 48-22-3325737

Romania - Bucharest
Tel: 40-21-407-87-50

Spain - Madrid
Tel: 34-91-708-08-90
Fax: 34-91-708-08-91

Sweden - Gothenberg
Tel: 46-31-704-60-40

Sweden - Stockholm
Tel: 46-8-5090-4654

UK - Wokingham
Tel: 44-118-921-5800
Fax: 44-118-921-5820

© 2019 Microchip Technology Inc