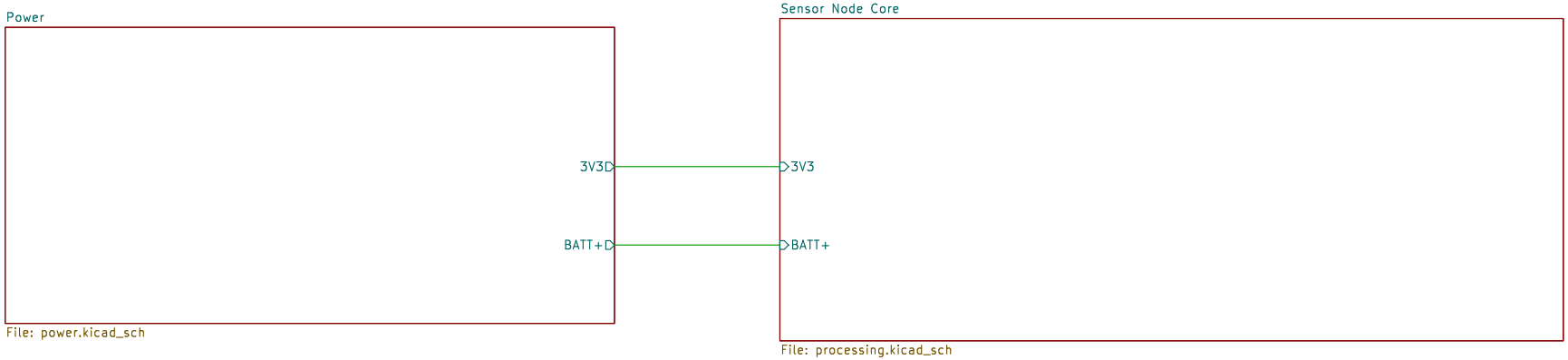

Sheet: /
File: sensor_node_kicad.kicad_sch

Title:

Size: A4	Date:	**Rev:**
KiCad E.D.A. 9.0.7		Id: 1/3

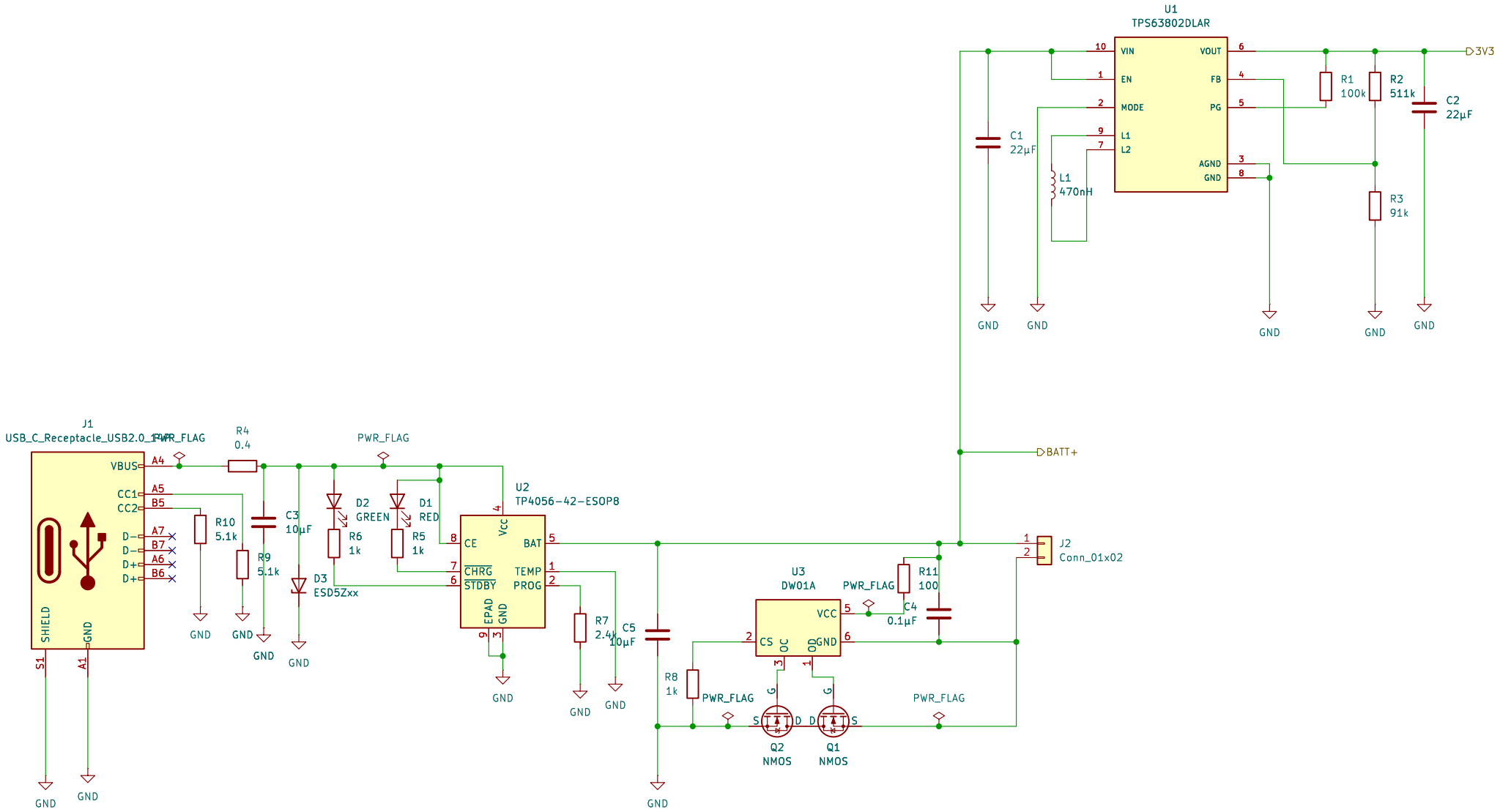

Sheet: /Power/
File: power.kicad_sch

Title: Power Supply Sensor Node

Size: A4	Date: 2026-03-18	Rev: v1.0
KiCad E.D.A. 9.0.7		Id: 2/3

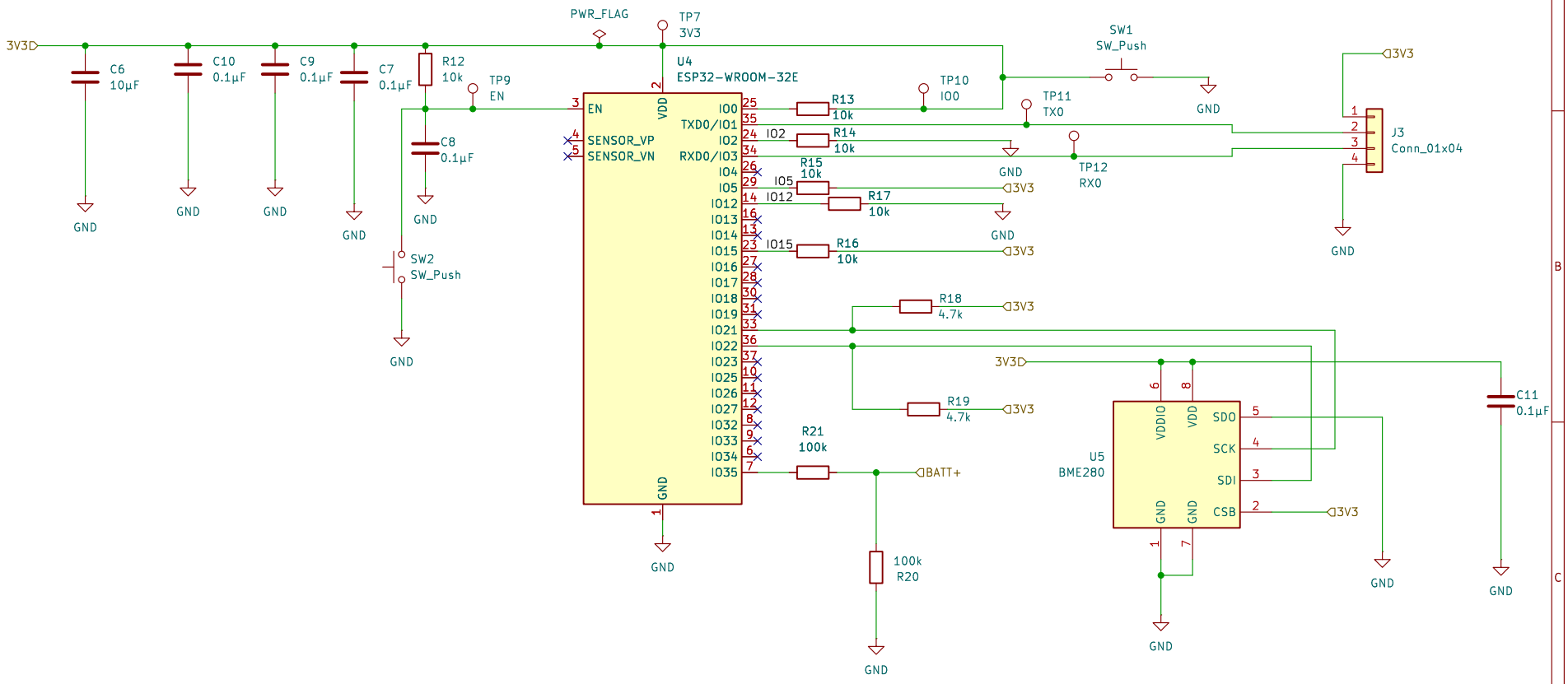

Sheet: /Sensor Node Core/
File: processing.kicad_sch

Title: Sensor Node Core

Size: A4	Date: 2026-03-19	Rev: v1.0
KiCad E.D.A. 9.0.7		Id: 3/3