Srishyala Educational Trust (R), Bheemasamudra
G M UNIVERSITY, DAVANGERE
DEPARTMENT OF COMPUTER SCIENCE &ENGINEERING

LECTURE NOTES – CHAPTER 1

COMPUTER ORGANIZATIONAND ARCHITECTURE

SUBJECT CODE: UE24CS2304

SEMESTER: III

Chapter 1

Syllabus:

Basic Structure of Computers: Functional Units, Basic Operational Concepts, Bus Structures, Performance –Processor Clock, Basic Performance Equation, Clock Rate, Performance Measurement.

Text book 1:

Carl Hamacher, ZvonkoVranesic, SafwatZaky, Computer Organization, 5th Edition, Tata McGraw Hill 2002.

(1.2, 1.3, 1.4, 1.6, 2.2, 2.3, 2.4, 2.5)

Computer Organization

It describes the function of and design of the various units of digital computer that store and process information.

1. Basic Structure of Computers:

A Computer is an electronic system capable of performing various computational tasks at a fast rate. A computer consists of five functionally independent main parts: input unit, memory unit, Arithmetic logic unit (ALU), output unit and control unit.

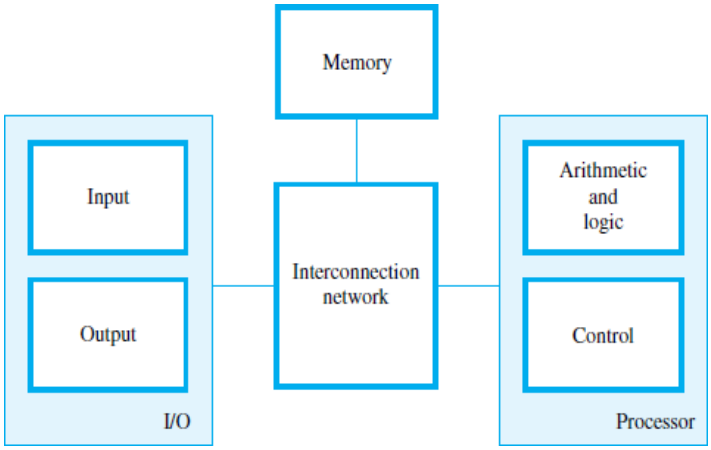

Figure 1.1 Basic functional units of a computer

- Input device accepts the coded information as source program i,e high level language. This is either stored in the memory or immediately used by the processor to perform the desired operations.
- The program stored in the memory determines the processing steps.
- Basically, the computer converts source program into object program (machine language).
- Finally, the result is sent to outside world through output device. All these actions are coordinated by the control unit.

Q. **With neat diagram , Explain the basic operational concepts of a Computer**

1.1 Basic operational concepts

An Instruction consists of 2 parts,

1) Operation code (Opcode) and
2) Operands.

OPCODE	OPERANDS

The data/operands are stored in memory.
The individual instruction is brought from the memory to the processor. Then, the processor performs the specified operation.

The activity in a computer is governed by instructions.
A typical instruction may be

ADD LOCA, R0

- Add the operand at memory location LOCA to the operand in a register R0 in the processor.
- Place the sum into register R0.
- The original contents of LOCA are preserved.
- The original contents of R0 is overwritten.
- The following are the steps to execute the instruction:

Step 1: Fetch the instruction from main-memory into the processor.
Step 2: Fetch the operand at location LOCA from main-memory into the processor.
Step 3: Add the memory operand (i.e. fetched contents of LOCA) to the contents of register R0.

Step 4: Store the result (sum) in R0.

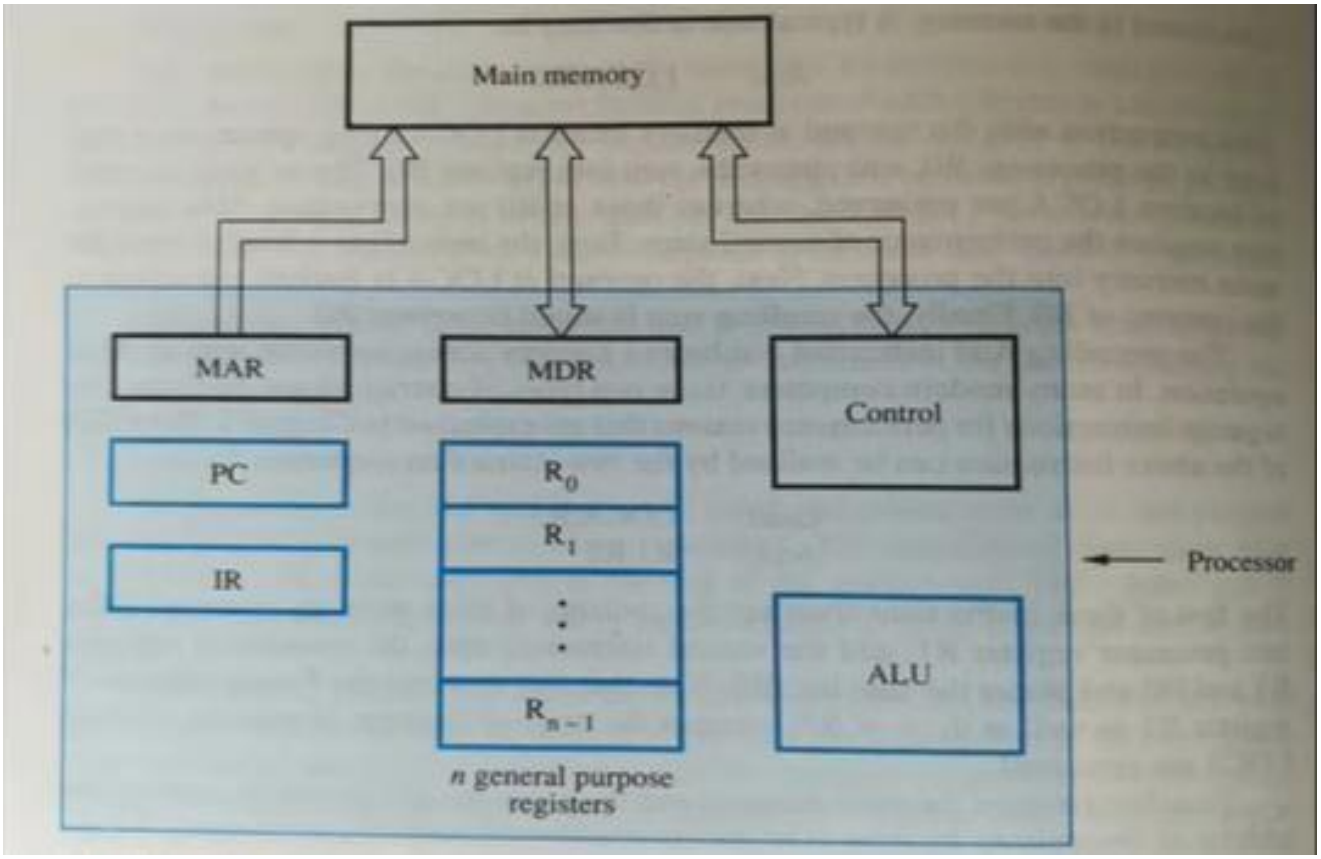

Processor components

Figure shows in detail how processor and memory are connected. Processor contains several registers along with ALU and timing unit.

The **processor** contains ALU, control-circuitry and many registers.

- The processor contains „n" general-purpose registers **R0** through **Rn-1**.
- The **IR** holds the instruction that is currently being executed.
- The **control-unit** generates the timing-signals that determine when a given action is to take place.
- The **PC** contains the memory-address of the next-instruction to be fetched & executed.
- During the execution of an instruction, the contents of PC are updated to point to next instruction.
- The **MAR** holds the address of the memory-location to be accessed.
- The **MDR** contains the data to be written into or read out of the addressed location.
- MAR and MDR facilitates the communication with memory. The other two registers which facilitate communication with memory are:

1. MAR – (Memory Address Register):- It holds the address of the location to be accessed.
2. MDR – (Memory Data Register):- It contains the data to be written into or read out of the address location.

Typical Operating steps are as follows:

a) Programs reside in the memory through input devices
b) PC is set to point to the first instruction
c) The contents of PC are transferred to MAR
d) A Read signal is sent to the memory
e) The first instruction is read out and loaded into MDR
f) The contents of MDR are transferred to IR
g) Decode and execute the instruction

STEPS TO EXECUTE AN INSTRUCTION

1) The address of first instruction (to be executed) gets loaded into PC.
2) The contents of PC (i.e. address) are transferred to the MAR & control-unit issues Read signal to memory.
3) After certain amount of elapsed time, the first instruction is read out of memory and placed into MDR.
4) Next, the contents of MDR are transferred to IR. At this point, the instruction can be decoded &executed.
5) To fetch an operand, it's address is placed into MAR & control- unit issues Read signal. As a result, the operand is transferred from memory into MDR, and then it is transferred from MDR to ALU.
6) Likewise required number of operands is fetched into processor.
7) Finally, ALU performs the desired operation.
8) If the result of this operation is to be stored in the memory, then the result is sent to the MDR.
9) The address of the location where the result is to be stored is sent to the MAR and a Write cycle is initiated.
10) At some point during execution, contents of PC are incremented to point to next instruction in the program.

1.2 Bus Structures

There are many ways to connect different parts inside a computer together.

- A bus is a group of lines that serves as a connecting path for several devices.
- A bus may be lines or wires.
- The lines carry data or address or control signal.
- There are 2 types of Bus structures:

1) Single Bus Structure and 2) Multiple Bus Structure.

- Bus control lines are used to arbitrate multiple requests for use of one bus.

1) Single Bus Structure

Because the bus can be used for only one transfer at a time, only 2 units can actively use the bus at any given time. Bus control lines are used to arbitrate multiple requests for use of the bus.

Advantages:

1. Low cost.
2. Very flexible for attaching peripheral devices

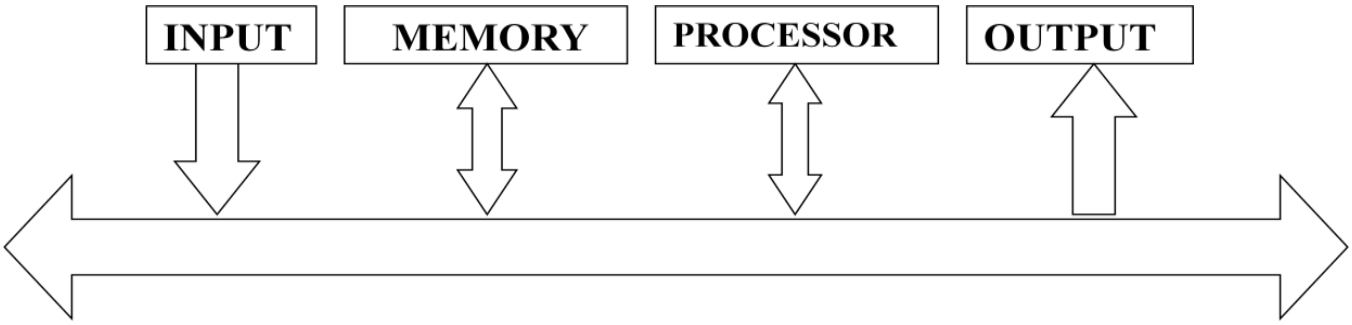

Figure : Single Bus structure

2) Multiple Bus Structure

Systems that contain multiple buses achieve more concurrency in operations.Two or more transfers can be carried out at the same time.

Advantage: Better performance.
Disadvantage: Increased cost.

• The devices connected to a bus vary widely in their speed of operation.
• To synchronize their operational-speed, buffer-registers can be used.

• Buffer Registers

→ are included with the devices to hold the information during transfers.
→ prevent a high-speed processor from being locked to a slow I/O device during data transfers.

Performance – Processor Clock, Basic Performance Equation, Clock Rate, Performance Measurement.

1.3 Performance –

- The most important measure of a computer is how quickly it can execute programs.

- Three factors affect performance: 1. Hardware design 2. Instruction set 3. Compiler
- The total time required to execute the program is elapsed time is a measure of the performance of the entire computer system. It is affected by the speed of the processor, the disk and the printer.
- The time needed to execute a instruction is called the processor time.
- Processor time to execute a program depends on the hardware involved in the execution of individual machine instructions

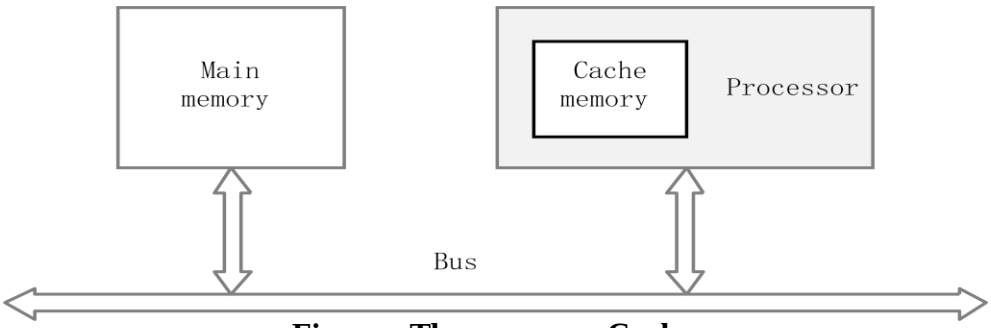

Figure : The processor Cache

Figure shows cache memory as part of the processor unit. The processor and a relatively small cache memory can be fabricated on a single integrated circuit chip.

- Let us examine the flow of program instructions and data between the memory and the processor. At the start of execution, all program instructions and the required data are stored in the main memory.
- As the execution proceeds, instructions are fetched one by one over the bus into the processor, and a copy is placed in the cache later if the same instruction or data item is needed a second time, it is read directly from the cache.

1.3.1 Processor Clock

- Processor circuits are controlled by a timing signal called clock
- The clock defines the regular time intervals called clock cycles.
- To execute a machine instruction the processor divides the action to be performed into a sequence of basic steps that each step can be completed in one clock cycle.
- Processor used in today's personal computer and work station have a clock rates that range from a few hundred million to over a billion cycles per second.
- Let P = Length of one clock cycle R = Clock rate.
- Relation between P and R is given by $R = \frac{1}{P}$
- The term "cycles per second" is called hertz
- The term "million" is denoted by the prefix Mega(M) and "billion" is denoted bythe prefix Giga(G)

Write the basic performance equation. explain the role of each of the parameters in the equation on the performance of the computer.

1.3.2 Basic Performance Equation

Let T = Processor time required to executed a Program.

N = Actual number of instruction executions.

S = Average number of basic steps needed to execute one machine instruction.

R = Clock rate in cycles per second.

- The program execution time is given by $T = \frac{N \times S}{R}$ ----- (1)

- Equ1 is referred to as the basic performance equation.
- To achieve high performance, the computer designer must reduce the value of T, which meansreducing N and S, and increasing R.

This is often referred to as the **basic performance equation.**

The value of N is reduced if source program is compiled into fewer machine instructions.
The value of S is reduced if instructions have a smaller number of basic steps to perform.
The value of R can be increased by using a higher frequency clock.
Care has to be taken while modifying values since changes in one parameter may affect the other.

1.3.3 Clock Rate

There are two possibilities for increasing the clock rate, R.

- First, **improving the integrated-circuit (IC)** technology makes logic circuit faster, which reduces the time needed to complete a basic step. This allows the clock rate R to be increased.
- Second, **reducing the amount of processing done in one basic step** also makes it possible to reduce the clock period, P. However, if the actions that have to be performed by an instruction remain the same, the number of basic steps needed may increase.

1.3.4 Performance Measurement

- The performance measure is the time taken by the computer to execute a given bench mark. Initially some attempts were made to create artificial programs that could be used as bench mark programs
- A non-profit organization called SPEC- systemperformance evaluation corporation selects and publishes bench marks
- The program selected range from game playing, compiler, and data base applications to numerically intensive programs in astrophysics and quantum chemistry. In each case, the program is compiled under test, and the running time on a real computer is measured.
- The same program is also compiled and run on one computer selected as reference.
- The 'SPEC' rating is computed as follows.

$$SPEC\ rating = \frac{\text{Running time on the reference computer}}{\text{Running time on the computer under test}}$$

$$SPEC\ rating = \left(\prod_{i=1}^{n} SPEC_i\right)^{\frac{1}{n}}$$

If the SPEC rating = 50 Means that the computer under test is 50 times as fast as the ultra sparc 10.

This is repeated for all the programs in the SPEC suit, and the geometric mean of the result is computed .