Quizrr

India's Most Comprehensive & the Most Relevant Test Series designed according to the latest pattern of exams!

JEE MAIN | JEE ADV. | BITSAT | WBJEE | MHT CET

and many more...

Click here to join Test Series for 2022

It's time for you to crack upcoming IIT JEE Main & Advanced and other competitive exams with India's Most Trusted Online Test Series. **Many questions at JEE Main 2021 were same/similar to the ones asked in our test series.** That's the power of our test series!

Trusted by thousands of students & their parents across the nation

Our result in JEE Main 2021

150+
Got **99+ percentile** (overall)

301
Got **99+ percentile** in one or more subjects

85%
Improved their score by **25 percentile**

89%
Felt **overall confident** after the test series

Click here to join Test Series for 2022

MARKS

FREE Question Bank & Previous Year Questions for

JEE MAIN | JEE ADV. | BITSAT | WBJEE | MHT CET

and many more...

GET IT ON Google Play

Click on this button

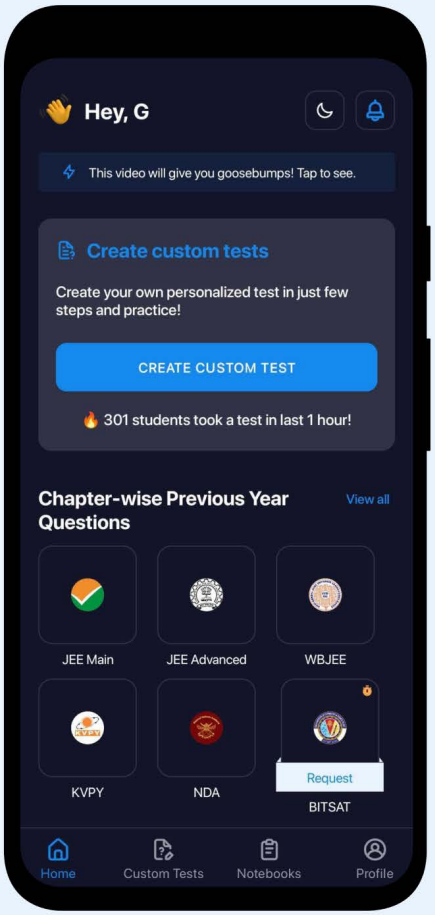

😎 Why download MARKS?

- 📚 Chapter-wise PYQ of JEE Main, JEE Advanced, NEET, AIIMS, BITSAT, WBJEE, MHT CET etc.
- 📚 Chapter-wise NTA Abhyas questions
- 🎯 Daily practice challenge and goal completion
- 🔖 Bookmark important questions and add them to your notebooks
- ✍️ Create unlimited Custom Tests

And all this for FREE. Yes, FREE! So what are you waiting for, download MARKS now.

4.8	30,000+	1,00,000+
Rating on Google Play	Students using daily	Questions available

GET IT ON Google Play

Click on this button

ELECTRICITY

Quizrr

1 ELECTRICITY

1.1 INTRODUCTION

An electrical circuit consists of some active and passive elements. The active elements such as a battery or a cell supply electric energy to the circuit. On the contrary, passive elements consume or store the electric energy. The basic passive elements are resistor, capacitor and inductor.

A resistor opposes the flow of current through it and if some current is passed by maintaining a potential difference across it, some energy is dissipated in the form of heat. A capacitor is a device which stores energy in the form of electric potential energy. It opposes the variations in voltage. An inductor opposes the variations in current. It does not oppose the steady current through it. Fundamentally, electric circuits are a means for conveying energy from one place to another. As charged particles move within a circuit, electric potential energy is transferred from a source (such as a battery or a cell) to a device in which that energy is either stored or converted to another form, into sound in a stereo system or into heat and light in a toaster or light bulb. Electric circuits are useful because they allow energy to be transported without any moving parts (other than the moving charged particles themselves).

In this chapter we will study the basic properties of electric currents. We'll study the properties of batteries and how they cause current and energy transfer in a circuit. In this analysis we will use the concepts of current, potential difference, resistance and electromotive force.

1.2 ELECTRIC CURRENT

Electric current is the rate of charge flow past a given point in an electric circuit, measured in Coulombs/second which is named Amperes. In most DC electric circuits, it can be assumed that the resistance to current flow is a constant so that the current in the circuit is related to voltage and resistance by Ohm's law. The standard abbreviations for the units are 1 A = 1C/s.

At room temperature, the free electrons in a conductor move randomly with speeds on the order 10^5 m/s. Since the motion of the electrons is random, there is no net charge flow in any direction. For any imaginary plane passing through the conductor, the number of electrons crossing the plane in one direction is equal to the number crossing it in the other direction.

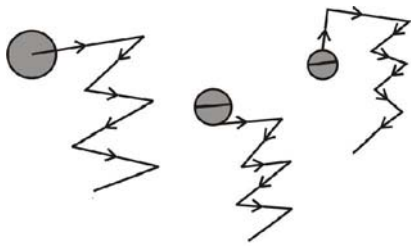

Random motion of free electrons in a conductor

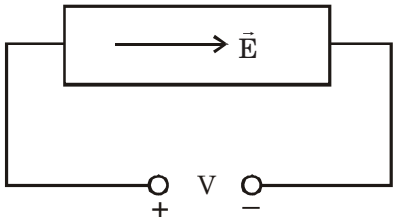

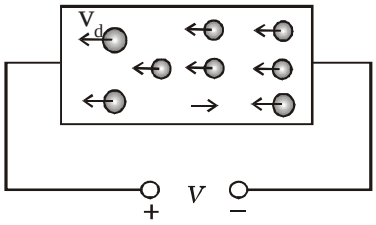

When a constant potential difference V is applied between the ends of the conductor an electric field $\vec{E}$ is produced inside the conductor. The conduction electrons within the conductor are then subjected to a force $-e\vec{E}$ and move in the direction of increasing potential. However, this force does not cause the electrons to move faster and faster. Instead, a conduction electron accelerates through a very small distance (about 5×10^{-8}m) and then collides with one of the atoms of the conductor. Each collision transfers some of the electron's kinetic energy to the atoms, resulting in an increase in the vibrational energy (and therefore in the temperature) of the atoms. Because of the electric and collision forces a conduction electron moves slowly along the conductor or we can say it acquires a drift velocity v_d in the direction opposite to $\vec{E}$, in addition to its random motion.

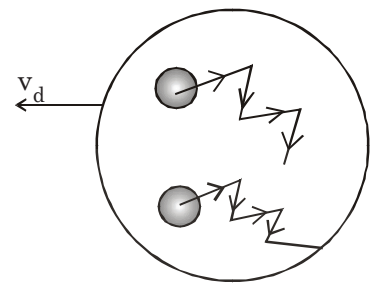

This chaotic motion of the electrons can be understood by a simple model. Let us imagine that the conduction electrons form an 'electron gas' whose particles are moving randomly, while the gas as a whole is moving slowly down the conductor with a drift velocity v_d in the direction opposite to $\vec{E}$. It's interesting to note that the magnitude of the drift velocity is of the order of 10^{-4} m/s, or about 10^9 times smaller than the average speed of the electrons between collisions. When averaged over time, the random motion of an electron due to its collisions does not result in any net displacement. Hence, we can ignore this random motion and treat the electrons as though they were all moving down the conductor at the drift velocity v_d.

The net movement of charge through a conductor is represented by electric current (or just current) I. Current is defined quantitatively in terms of the rate at which net charge passes through a cross-section area of the conductor.

Thus, $$I = \frac{dq}{dt} \quad \text{or} \quad i = \frac{dq}{dt}$$

We can have following two concepts of current, as in the case of velocity, instantaneous current and average current.

$$\text{instantaneous current} = \frac{dq}{dt} = \text{current at any point of time}$$

and $$\text{average current} = \frac{\Delta q}{\Delta t}$$

Hence-forth unless otherwise referred to, current would signify instantaneous current. By convention, the direction of the current is assumed to be that in which positive charge moves. In the SI system, the unit of current is ampere (A).

$$1A = 1\ C/s$$

1.3 CONVENTIONAL ELECTRIC CURRENT

Although it is electrons which are the mobile charge carriers which are responsible for electric current in conductors such as wires, it has long been the convention to take the direction of electric current as if it were the positive charges which are moving. Some texts reverse this convention and take electric current direction as the direction the electrons move, an obviously more physically realistic direction, but the vast majority of references use the conventional current direction and that convention will be followed in most of this material. In common applications such as determining the direction of force on a current carrying wire, treating current as positive charge motion or negative charge motion gives identical results. Besides the advantage of agreeing in direction with most texts, the conventional current direction is the direction from high voltage to low voltage, high energy to low energy.

Important Points to Remember

1. The current is the same for all cross-sections of a conductor of non-uniform cross-section. Similar to the water flow, charge flows faster where the conductor is smaller in cross-section and slower where the conductor is larger in cross-section, so that charge rate remains unchanged.
2. Electric current is very similar to water current, consider a water tank kept at some height and a pipe is connected to the water tank. The rate of flow of water through the pipe depends on the height of the tank. As the level of water in the tank falls, the rate of flow of water through the pipe also gets reduced. Just as the flow of water depends on the height of the tank or the level of water in the tank, the flow for current through a wire depends on the potential difference between the end points of the wire. As the potential difference is changed the current will change. For example, during the discharging of a capacitor potential difference and hence, the current in the circuit decreases with time. To maintain a constant current in a circuit a constant potential difference will have to be maintained and for this a battery is used which maintains a constant potential difference in a circuit.
3. Though conventionally a direction is associated with current (opposite to the motion of electrons), it is not a vector as the direction merely represents the sense of charge flow and not a true direction. Further, current does not obey the law of parallelogram of vectors, i.e. if two current i_1 and i_2 reaches a point we always have $i = i_1 + i_2$ whatever be the angle between i_2 and i_2.

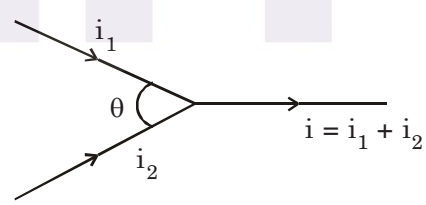

4. According to its magnitude and direction current is usually divided into two types :
   (i) **Direct current (DC) :** If the magnitude and direction of current does not vary with time, it is said to be direct current (DC). Cell, battery or DC dynamo are its sources.
   (ii) **Alternating current (AC) :** If a current is periodic (with constant amplitude) and has half cycle positive and half negative, it is said to be alternating current. (AC). AC dynamo is the source of it.
5. If a charge q revolves in a circle with frequency f, the equivalent current,

$$i = qf$$

Example 1

A wire carries a current of 2.0 A. What is the charge that has flowed through its cross-section in 1.0s. How many electrons does this correspond to ?

Solution.

$$i = \frac{q}{t}$$

$$q = it = (2.0\ A)\ (1.0s) = 2.0\ C$$ **Ans.**

$$q = ne$$

$$n = \frac{q}{e} = \frac{2.0}{1.6 \times 10^{-19}}$$

$$= 1.25 \times 10^{19}$$ **Ans.**

Example 2

The current in a wire varies with time according to the relation

$$i = (3.0A) + \left(2.0\frac{A}{s}\right) t$$

(a) **How many coulombs of charge pas a cross-section of the wire in the time interval between** t **= 0 and** t **= 4.0**s **?**

(b) **What constant current would transport the same charge in the same time interval?**

Solution. (a)

$$i = \frac{dq}{dt}$$

$$\int_0^q dq = \int_0^4 i dt$$

$$q = \int_0^4 (3 + 2t) dt$$

$$= [3t + t^2]_0^4 = [12 + 16]$$

$$= 28\ C$$ **Ans.**

(b)

$$i = \frac{q}{t} = \frac{28}{4}$$

$$= 7$$ **Ans.**

1.4. CURRENT DENSITY (J) :

The current flowing per unit normal area at a point is called current density at that point. It is a vector quantity whose direction is taken in the direction of current at the point.

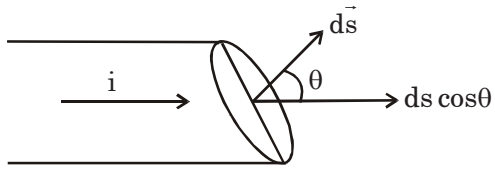

$$\boxed{j = \frac{di}{ds\cos\theta}} \quad ...(1)$$

From equation (1)

$$di = j\ ds\ \cos\theta = \vec{j}.d\vec{s}$$

$\therefore$ $$\boxed{I = \int di = \int \vec{j}.d\vec{s}}$$

If j is constant, then $\boxed{I = \vec{j}.\vec{s}}$

*If the current is constant then $\left(j\ \alpha\ \frac{1}{S}\right)$

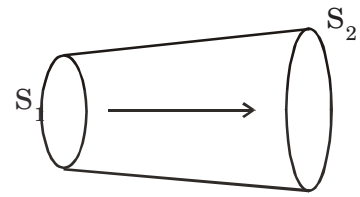

If $S_2 > S_1$

$\Rightarrow j_1 > j_2$ (current is constant)

Example 3

Find the current through a cylindrical wire whose current density varies as :

$$j = j_0\left(1 + \frac{r}{R}\right)$$

Solution. Consider this circular ring cross-section of wire, at distance r from axis.

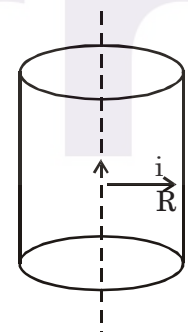

$$i = \int j.ds = \int_0^R \left[j_0\left(1 + \frac{r}{R}\right)\right] 2\pi r\ dr$$

$$= 2\pi j_0\left[\frac{R^2}{2} + \frac{R^2}{3}\right] = \left(\frac{10\pi j_0.R^2}{6}\right)$$

1.5. DRIFT VELOCITY (V_d)

Let n = number of particles per unit volume

e = charge of each particle

Then, $dq = (Adx)\ ne$

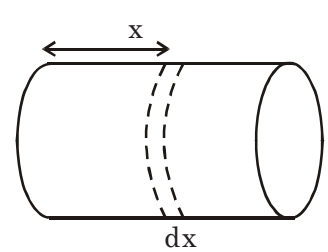

$\therefore$ $$\left(\frac{dq}{dt}\right) = nA\left(\frac{dx}{dt}\right)e$$

$$\boxed{i = n\,A(V_d)e} \quad \left\{\frac{dx}{dt} = v_d\right\}$$

In terms of current density, $\boxed{j = neV_d}$

Some Points :

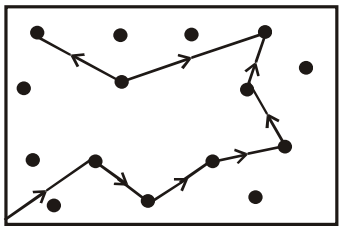

1. In the absence of the external fields, inside the conductor all free electrons move under random motion with $V_{rms} = \sqrt{\left(\frac{3RT}{M}\right)}$ and follow a zig-zag path.
2. In the absence of electric field, the total number of free electrons passing through a cross-section from left to right is equal to total no. of free electrons passing from right to left. Hence, there is no current through the conductor.
3. But when an external field is applied inside the conductor, all the free electrons experience an electric force and acquires a velocity called drift velocity, and hence a current is established in the conductor.

$$\frac{d\vec{V}}{dt} = -\left(\frac{e\vec{E}}{m}\right)$$

$$\int_{V_{rms}}^{V} d\vec{v} = \frac{-eE}{m}\int_0^t dt$$

$$\boxed{\vec{V} - \vec{V}_{rms} = -\left(\frac{e\vec{E}}{m}\right)t}$$

To find the drift velocity take the average value for a large number of electrons

$$\langle\vec{V}\rangle - \langle\vec{V}_{rms}\rangle = -\left(\frac{e\vec{E}}{m}\right)t$$

[$\vec{V}_{rms}$ is a randomly oriented vector, hence $V_{rms} = 0$]

$\Rightarrow$ $$\boxed{(V_d) = \frac{eE\tau}{m}}$$

where τ = (relaxation time)

τ = time between successive collision = (λ / V_d)

where λ = mean free path

1.6. RELATION BETWEEN CURRENT DENSITY AND ELECTRIC FIELD

$$j = neV_d$$

$$V_d = \left(\frac{eE}{m}\right)\tau$$

$$\Rightarrow \qquad j = \frac{ne^2 E\tau}{m}$$

$$\therefore \qquad j = \left(\frac{ne^2\tau}{m}\right) E = \sigma E$$

where σ = electric conductivity = $\left(\frac{ne^2}{m}\right)\tau$

$$\boxed{\text{Resitivity} = \frac{1}{\sigma} = \frac{m}{ne^2\tau}}$$

1.7. MOBILITY

Drift velocity acquired per unit electric field is called mobility.

$$\mu = \left(\frac{V_d}{E}\right) = \left(\frac{e\tau}{m}\right) \Rightarrow \boxed{\sigma = ne\mu}$$

1.8. EFFECT OF TEMPERATURE ON RESITIVITY

$$\rho = \frac{m}{\eta e^2 \tau}$$

$n \equiv$ number density $\equiv$ depends on nature of material

$\tau \equiv$ relaxation time = depends on nature as well as temperature

—In conductors : On increasing the temperature, the number of free electrons does not change (increase) appreciably, whereas the relaxation time decreases appreciably, (due to increase in V_{rms} and decrease in mean free path due to increased amplitudes of vibrations. Hence, resistivity increases with increase in temperature.

—In semi-conductors : On increasing the temperature, the resistivity of the semi-conductor decreases.

Reason—Inside a semi conductor the number of free electrons increases appreciably with the increase in temperatures, whereas the relaxation time does not decrease appreciably and hence, the overall effect is the decrease in resistivity.

The number of free electrons in the semi-conductor varies with the temperature as :

$$\boxed{n = n_0 e^{-Eg/kT}}$$

where Eg = is the difference valence of energy level between valence and conduction band.

In terms of electrical conductivity :

$$\sigma = \sigma_0 e^{-\frac{E_g}{kT}} \qquad \because \boxed{\sigma = \eta e \mu}$$

At high temperature : $T \to \infty$ ($\sigma = \sigma_0$)

The semi-conductor behaves as a conductor.

At low temperature : $T \to 0$, $\sigma = 0$

The semi-conductor behaves as an insulator.

2. OHM'S LAWS

Since, $j = \sigma E$

$$\Rightarrow \quad \frac{i}{A} = \left(\frac{\sigma V}{l}\right)$$

$$\therefore \quad \boxed{V = \left(\frac{\rho l}{A}\right) i}$$

STATEMENT : The current flowing through a conductor is directly proportional to the potential difference applied across the ends provided the

i.e $V \alpha I$

or $V = IR$

Where R is the resistance of the conductor.

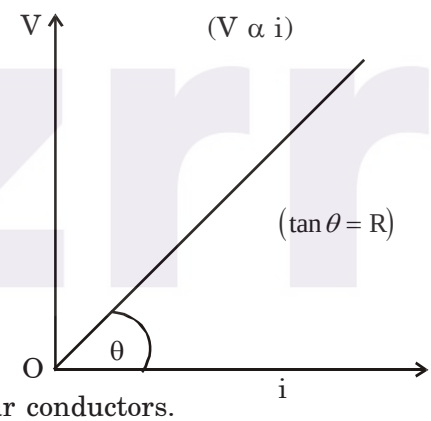

The materials following the ohm's law are called ohmic or linear conductors.

Example 4

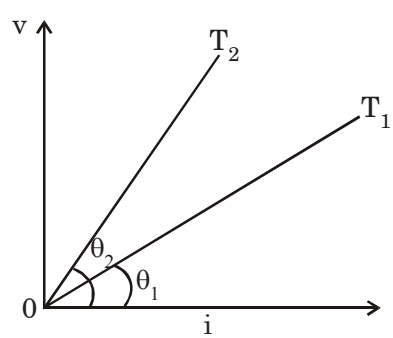

Which of the temperature T_1, T_2 are greater for the V v/s i graph for a given ohmic resistor.

Solution. (R α slope)

$\Rightarrow$ $R_2 > R_1$

as, $(T_2 > T_1)$

3.1. RESISTANCE

The electrical resistance of an object is a measure of its opposition to the passage of a steady electric current. An object of uniform cross section will have a resistance proportional to its length and inversely proportional to its cross-sectional area, and proportional to the resistivity of the material.

Electrical resistance shares some conceptual parallels with the mechanical notion of friction. The SI unit of electrical resistance is the ohm, symbol Ω. Resistance's reciprocal quantity is electrical conductance measured in siemens, symbol S.

The resistance of a resistive object determines the amount of current through the object for a given potential difference across the object, in accordance with Ohm's law :

$$I = \frac{V}{R}$$

where,

R is the resistance of the object, measured in ohm, equivalent to $J.s/C^2$

V is the potential difference across the object, measured in volts.

I is the current through the object, measured in amperes.

For a wide variety of materials and conditions, the electrical resistance does not depend on the amount of current through or the amount of voltage across the object, meaning that the resistance R is constant for the given temperature. Therefore, the resistance of an object can be defined as the ratio of voltage to current :

$$R = \frac{V}{I}$$

3.2. DC RESISTANCE

The resistance R of a conductor of uniform cross section can be computed as

$$R = \frac{\rho l}{A}$$

where,

l is the length of the conductor, measured in meters.

A is the cross-sectional area, measured in square meters.

ρ is the electrical resistivity (also called specific electrical resistance) of the material, measured in Ohm meter. Resistivity is a measure of the material's ability to oppose electric current.

3.3. RESISTIVITY

Electrical resistivity (also known as specific electrical resistance or volume resistivity) is a measure of how strongly a material opposes the flow of electric current. A low resistivity indicates a material that readily allows the movement of electrical charge. The SI unit of electrical resistivity is the ohm meter (Ωm).

Definitions

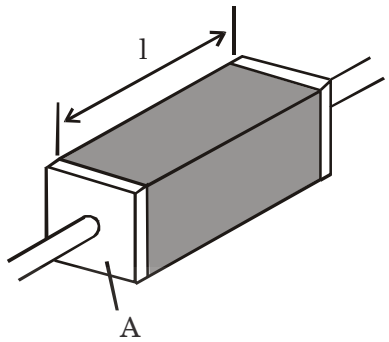

A piece of resistive material with electrical contacts on both ends.

Electrical resistivity ρ (Greek : rho) is defined by,

$$\rho = \frac{E}{J}$$

where,

ρ is the static resistivity (measured in volts metres per ampere, V m/A);

E is the magnitude of the electric field (measured in volts per metre, V/m);

J is the magnitude of the current density (measured in amperes per square metre, A/m^2).

The electrical resistivity ρ can also be given by,

$$\rho = R\frac{A}{\ell}$$

where

ρ is the static resistivity (measured on ohm-metres, Ωm);

R is the electrical resistance of a uniform specimen of the material (measured in ohm,Ω) ;

ℓ is the length of the piece of material (measured in metres, m) :

A is the cross-sectional area of the specimen (measured in square metres, m^2).

Finally, electrical resistivity is also defined as the inverse of the conductivity σ (sigma), of the material, or

$$\rho = \frac{1}{\sigma}$$

3.4. TEMPERATURE COEFFICIENT OF RESISTIVITY (α)

The fractional change in resistivity for unit 1 C or 1 K change of temperature is called temperature coefficient of resistivity (α).

$$\alpha = \left(\frac{\Delta\rho}{\rho\,\Delta\theta}\right) \text{(Average value)}$$

$$\therefore \boxed{\rho = \rho_0\,(1 + \alpha\Delta\theta)} \Rightarrow \boxed{R = R_0\,(1 + \alpha\Delta\theta)}$$

$$\alpha = \left(\frac{d\rho}{\rho\,d\theta}\right) \text{(Absolute value)}$$

$$\therefore \quad \int_{\rho_0}^{\rho} \frac{d\rho}{\rho} = \int_{\theta_0}^{\theta} \alpha d\theta$$

$$\ln\left(\frac{\rho}{\rho_0}\right) = \int_{\theta_0}^{\theta} \alpha\, d\theta$$

α is + ve for a conductor.

α is –ve for a semi-conductor.

In general,

$$\rho = \rho_0\,[1 + \alpha\Delta\theta + \beta\Delta\theta^2 + \gamma\delta\theta^3 + ...]$$

but for small temperature change, higher powers are neglected.

Variation of ρ :

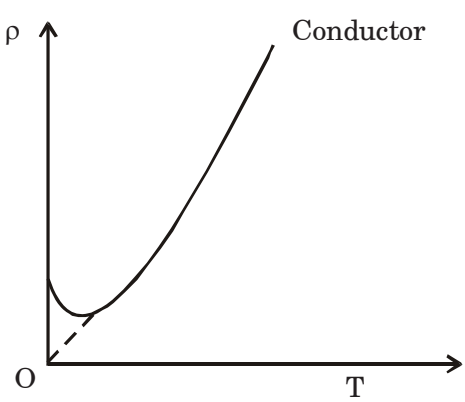

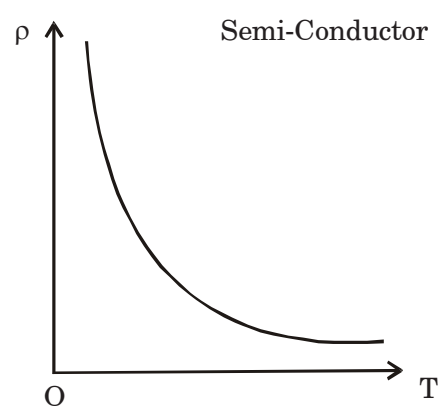

Super-conductor : A substance whose resistivity becomes zero at temperature critical temperature is called super-conductor.

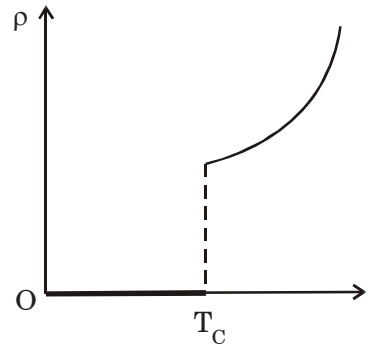

Example 5

A steady current flows through a conductor of a non-uniform cross-section. Then, which of the following quantities are constant ?

(i) **current,** (ii) **current density,** (iii) **electric field,** (iii) **drift velocity.**

Solution. (i) current remains constant.

(ii) current density is not constant

$\because$ $$j \alpha \left(\frac{1}{S}\right)$$

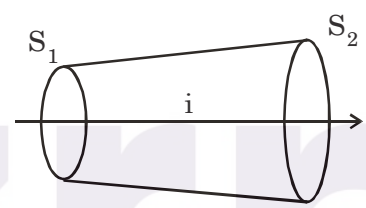

(iii) Electric field is again not constant

$$j = \sigma E$$

(iv) drift velocity is also not constant

$\because$ $$V_d = \left(\frac{eE}{m}\right)\tau$$

Example 6

A potential drop V is applied across the ends of a conductor of length ℓ. Then, find the change in the drift velocity if :

(i) **V is doubled**

(ii) **ℓ is doubted**

(iii) **diameter is doubled.**

Solution. (i) **When V is doubled :** $V = E\ell$ $\therefore$ ($V \alpha E$)

$\therefore$ E is also doubled, and hence V_d is also doubled.

(ii) **ℓ is doubled :** E is halfed

$\therefore$ V_d is also halved

(iii) **Diameter is doubled :** V_d remain unchanged.

Example 7

Find the resistance of a cylindrical hollow tube which is connected between,

(a) **inner and outer surfaces of the cylindrical shell**

(b) **when connected between the ends** a **and** b**.**

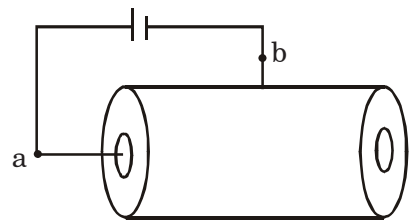

Solution. (a) When connected between inner and outer surfaces :

In this case, consider co-axial cylinders of thickness dr and all such cylinders are in series

$$\therefore \qquad R = \int_a^b \frac{\rho\, dr}{2\pi r l} = \left(\frac{\rho}{2\pi\ell}\right) \ln\left(\frac{b}{a}\right)$$

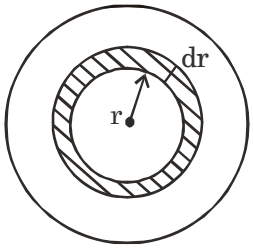

(b) **When connected across the ends :** Consider annular distance

$$\int dR = \int_0^l \frac{\rho dx}{\pi\left(b^2 - a^2\right)}$$

$$R = \frac{\rho l}{\pi\left(b^2 - a^2\right)}$$

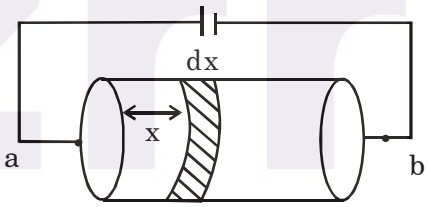

Alternative methods : (Using the concept of current density)

$$j = \sigma E$$

$$\Rightarrow \qquad E = \rho j$$

$$\boxed{\frac{-dV}{dx} = \rho j} \qquad \text{Apply this}$$

(a) $$-\left(\frac{dV}{dr}\right) = \rho\left(\frac{I}{2\pi r \ell}\right) \qquad \left\{\text{as } j = \frac{I}{A} = \frac{I}{2\pi r l}\right\}$$

$$-\int_{V_a}^{V_b} dV = \int_a^b \left(\frac{\rho I}{2\pi r l}\right) dr$$

$$(V_a - V_b) = \frac{\rho I}{2\pi l} \ln\left(\frac{b}{a}\right)$$

$$\therefore \qquad R = \frac{\rho \ell n (b/a)}{2\pi l}$$

(b) $$-\left(\frac{dV}{dx}\right) = P\frac{I}{\pi(b^2 - a^2)}$$

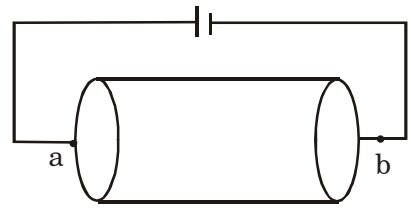

$$\therefore \qquad -\int_{V_a}^{V_b} dV = \frac{\rho I}{\pi(b^2 - a^2)}\int_0^{\ell} dx$$

$$(V_a - V_b) = \frac{\rho I \ell}{\pi(b^2 - a^2)}$$

4. THE BATTERY AND THE ELECTROMOTIVE FORCE

Before studying the electromotive force (emf) of a cell let us take an example of a pump which is more easy to understand.

Suppose we want to recycle water between a overhead tank and a ground water tank. Water flows from overhead tank to ground water tank by itself (by gravity). No external agent is required for this purpose. But to raise the water from ground water tank to overhead tank a pump is required or some external work has to be done. In an electric circuit a battery or a cell plays the same role as the pump played in the above example.

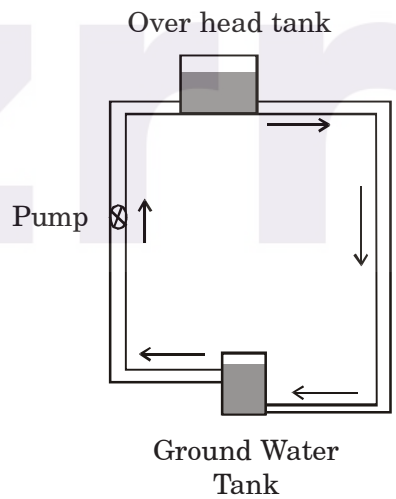

Suppose a resistance (R) is connected across the terminals of a battery. A potential difference is developed across its ends. Current (or positive charge) flows from higher potential to lower potential across the resistance by itself. But inside the battery work has to be done to bring the positive charge from lower potential to higher potential. The influence that makes current flow from lower to higher potential (inside the battery) is called **electromotive force** (abbreviated emf). If W work is done by the battery in taking a charge q from negative terminal to positive terminal, then work done by the battery per unit charge is called emf (E) of the battery.

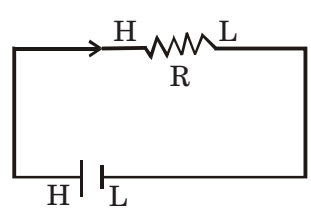

Thus, $$E = \frac{W}{q}$$

The name electromotive force is misleading in the sense that emf is not a force it is work done per unit charge. The SI unit of emf is J/C or V (1 V = 1 J/C).

Important Points to Remember

1. A battery is a device which maintains a potential difference between its two terminals. It is often prepared by putting two rods or plates of different metals in a chemical solution. Some internal mechanism exerts forces $\left(\vec{F}_n\right)$ on the ions (positive and negative) of the solution.

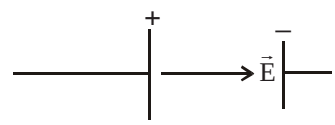

This force drives positive ions towards positive terminal and negative ions towards negative terminal. As positive charge accumulates on anode and negative charge on cathode a potential difference and hence an electric field $\vec{E}$ is developed from anode to cathode. This electric field exerts an electrostatic force $\vec{F}_e = q\vec{E}$ on the ions. This force is opposite to that of $\vec{F}_n$. In equilibrium (steady state)

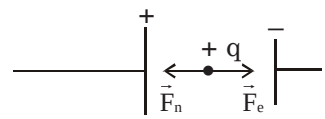

$$F_n = F_e$$

and no further accumulation of charge takes place.

2. The emf is the work done per unit charge by the battery force F_n which is non electrostatic in nature.

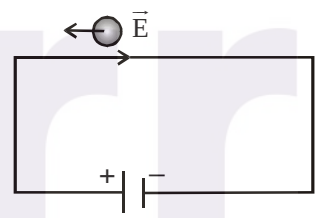

3. When the terminals of the battery are connected by a conducting wire, an electric field is developed in the wire in the direction shown in Fig. The free electrons in the wire move in the opposite direction and enter the battery at positive terminal. Some electrons are withdrawn from the negative terminal. Thus, potential difference and hence, F_e decreases in magnitude while F_n remains the same. Thus, there is a net force on the positive charge towards the positive terminal. With this the positive charge rush towards positive terminal and negative charge rush towards negative terminal. Thus, the potential difference between positive and negative terminal is maintained.
4. During the charging of a battery current is driven into a battery in the reverse direction. In such a case positive charge enters the battery at the positive terminal and leaves the battery from the negative terminal.
5. In an open circuit the electrostatic force $\vec{F}_e$ and non-electrostatic force $\vec{F}_n$ on a charge q are equal.
6. The work done by $\vec{F}_n$ on a positive charge q moving from negative terminal to positive terminal is qE, where E is the emf of the battery.

Example 8

Why can't we use a capacitor as a battery ? What is the difference between a battery and a capacitor ?

Solution. A capacitor cannot maintain constant potential difference across a circuit. After the capacitor discharges completely no current is obtained. A capacitor discharges in a very short interval of time. On the other hand, a battery can maintain a constant potential difference for a long period of time. A battery also gets discharged, but discharging may take years also.

4.1. DIRECT CURRENT CIRCUITS, KIRCHHOFF'S LAWS

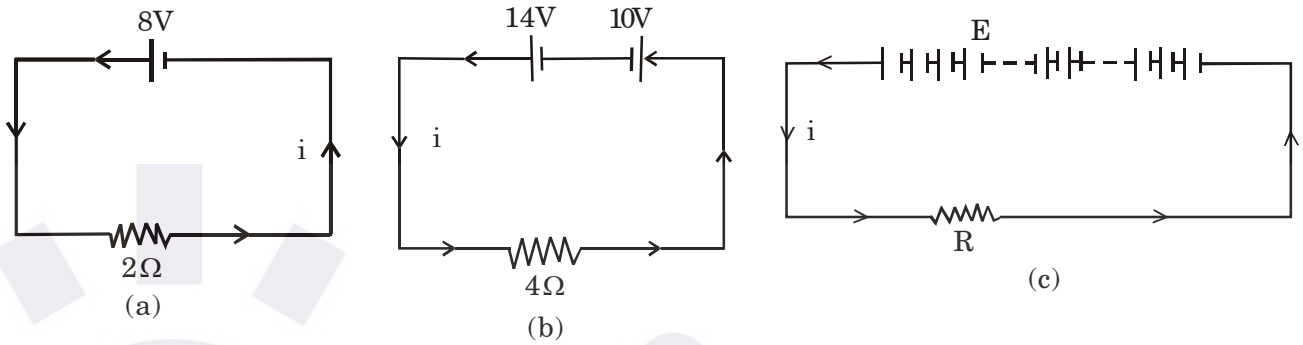

Current in a simple circuit can be found by the relation,

$$i = \frac{\text{net emf}}{\text{net resistance}} = \frac{E_{net}}{R_{net}}$$

For example :

In Fig. (a) **:** Net emf is 8V and net resistance is 2Ω. Therefore,

$$i = \frac{8}{2} = 4\,A$$

In Fig. (b) **:** Net emf = (14 – 10) V

= 4V

and Net resistance = 4Ω

Therefore, $i = \frac{4}{4} = 1\,A$

In Fig. (c) : We have n cells each of emf E. Of these polarity of m cells (where n > 2m) is reversed. Then net emf in the circuit is (n – 2m) E and resistance of the circuit is R. Therefore,

$$i = \frac{(n-2m)E}{R}$$

5. Resistors in Series and in Parallel

In Series :

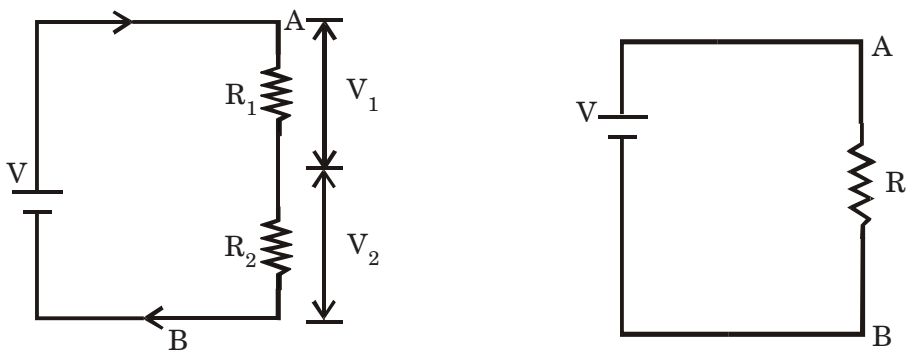

Figure represents a circuit consisting of a source of emf and two resistors connected in series. We are interested in finding the resistance R is of the network lying between A and B. That is, what single equivalent resistor R would have the same resistance as the two resistors linked together.

Because there is only one path for electric current to follow, i must have the same value everywhere in the circuit. The potential difference between A and B is V. This potential difference must somehow be divided into two parts V_1 and V_2 as shown, subject to the condition

$$V = V_1 + V_2$$

$$= iR_1 + iR_2$$

or $$V = i\,(R_1 + R_2) \quad ...(i)$$

Let R be the equivalent resistance between A and B, then

$$V = iR \quad ... (ii)$$

From Eqs. (i) and (ii),

$$R = R_1 + R_2 \text{ for resistors in series}$$

This result can be readily extended to a network consisting of n resistors in series.

$$R = R_1 + R_2 + ...+R_n$$

In parallel :

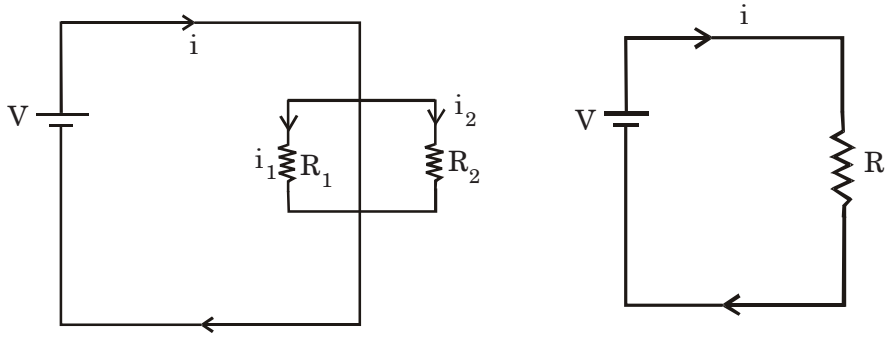

In Fig. the two resistors are connected in parallel. The voltage drop across each resistor is equal to the source voltage V. The current i, however, divides into two branches, which carry currents i_1 and i_2.

$$i = i_1 + i_2 \qquad \text{(iii)}$$

If R be the equivalent resistance, then

$$i = \frac{V}{R}, \quad i_1 = \frac{V}{R_1}$$

and

$$i_2 = \frac{V}{R_2}$$

Substituting in Equation (iii) we get

$$\frac{1}{R} = \frac{1}{R_1} + \frac{1}{R_2} \quad \text{(for resistors in parallel)}$$

This result can also be extended to a network consisting of n resistors in parallel. The result is,

$$\frac{1}{R} = \frac{1}{R_1} + \frac{1}{R_2} + \ldots\ldots \frac{1}{R_n}$$

Example 9

Compute the equivalent resistance of the network shown in Fig. and find the current i drawn from the battery.

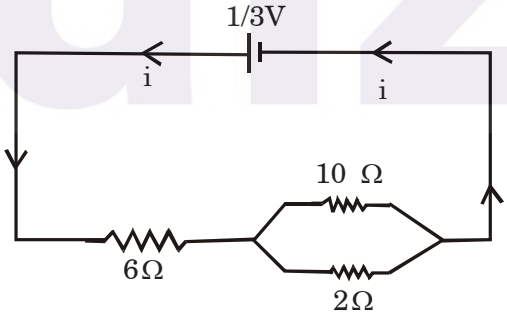

Solution. The 10Ω and 2Ω resistances are in parallel. Their equivalent resistance is,

$$\frac{1}{R} = \frac{1}{10} + \frac{1}{2}$$

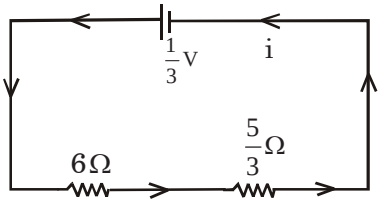

or

$$R = \frac{5}{3}\Omega$$

Now this 6Ω and $\frac{23}{3}\Omega$ resistances are in series and their equivalent resistance is $6 + \frac{5\Omega}{3} = \frac{23}{3}\Omega$

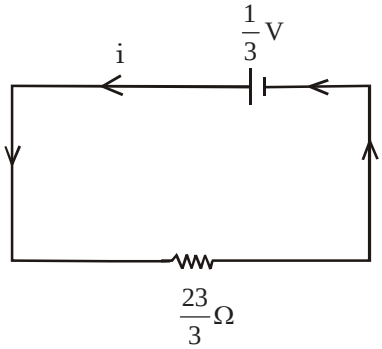

Therefore, equivalent resistance of the network = $\frac{23}{3}\Omega$. **Ans.**

Current drawn from the battery is,

$$i = \frac{\text{net emf}}{\text{net resistance}} = \frac{1}{23}$$

$$= \frac{1}{23}\text{A}$$ **Ans.**

4.1.1. KIRCHHOFF'S LAWS

Many electric circuits cannot be reduced to simple series-parallel combinations. For example, two circuits that cannot be so broken down are shown

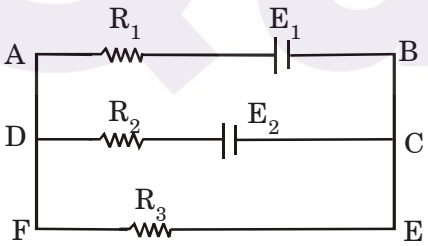

(a)

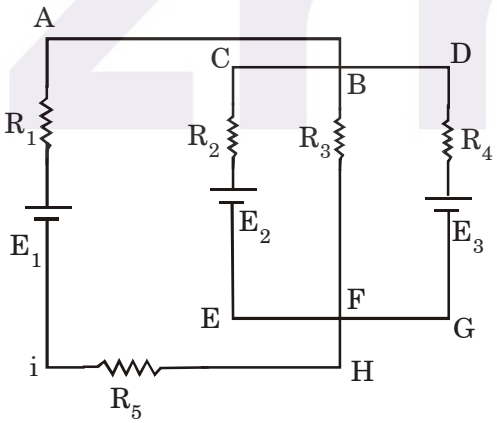

(b)

However, it is always possible to analyze such circuits by applying two rules, devised by Kirchhoff's in 1845 and 1846 when he was still a student.

First here are two terms that we will use often.

Junction

A junction in a circuit is a point where three or more conductors meet. Junctions are also called node or branch points.

For example, in figure (a) points D and C are junctions. Similarly in figure (b) points B and F junction.

Loop

A loop is any closed conducting path. For example, in figure (a) ABCDA, DCEFD and ABEFA loops. Similarly, in figure (b), CBFEC, BDGFB are loops.

4.1.2. KIRCHHOFF'S CURRENT LAW

This fundamental law results from the conservation of charge. It applies to a junction or node in a circuit a point in the circuit where charge has several possible paths to travel.

In Figure. we see that I_A is the only current flowing into the node. However, there are three paths for current to leave to node, and these current are represented by I_B, I_C, and I_D.

Once charge has entered into the node, it has no place to go except to leave (this is known as conservation of charge). The total charge flowing into a node must be the same as the total charge flowing out of the node. So,

$$I_B + I_C + I_D = I_A$$

Bringing everything to the left side of the above equation, we get

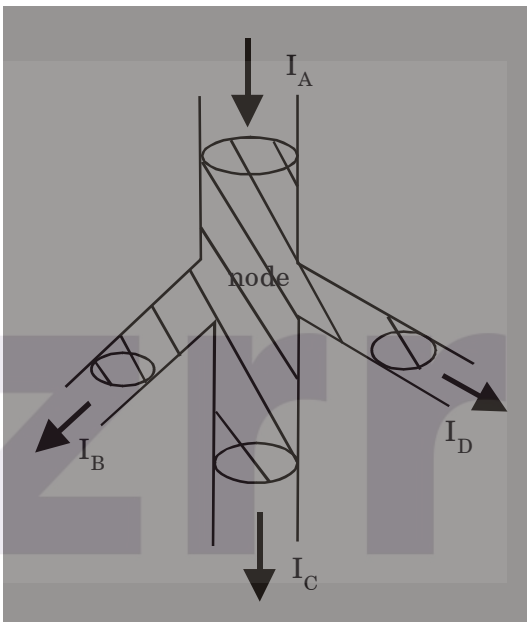

Possible node (or junction) in a circuit

$$(I_B + I_C + I_D) - I_A = 0$$

Then, the sum of all the currents is zero. This can be generalized as follows

$$\Sigma I = 0$$

Note the convention we have chosen here : current flowing into the node are taken to be negative, and currents flowing out of the node are positive. It should not really matter which you choose to be the positive or negative current, as long as you stay consistent.

4.1.3. KIRCHHOFF'S VOLTAGE LAW

Kirchhoff's Voltage Law (or Kirchhoff's Loop Rule) is a result of the electrostatic field being conservative. It states that the total voltage around a closed loop must be zero. If this were not the case, then when we travel around a closed loop, the voltages would be indefinite. So

$$\Sigma V = 0$$

In Figure the total voltage around loop 1 should sum to zero, as does the total voltage in loop 2. Furthermore, the loop which consists of the outer part of the circuit (the path ABCD) should also sum to zero.

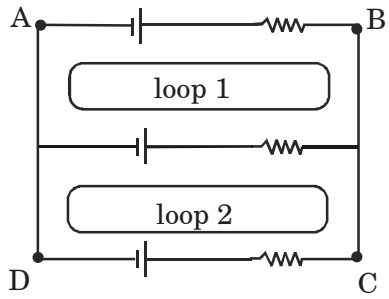

Around a closed loop, the total voltage should be zero

We can adopt the convention that potential gains (i.e. going from lower to higher potential, such as with an emf source) is taken to be positive. Potential losses (such as across a resistor) will then be negative.

In applying the loop rule, we need sign conventions. First assume a direction for the current in each branch of the circuit. Then starting at any point in the circuit, we imagine, travelling around a loop adding emf's and iR terms as we come to them.

When we travel through a source in the direction from –to +, the emf is considered to be positive, when we travel from + to –, the emf is considered to be negative.

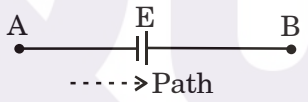

$\Delta V = V_B - V_A = +E$

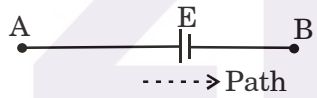

$\Delta V = V_B - V_A = -E$

When we travel through a resistor in the same direction as the assumed current, the iR term is negative because the current goes in the direction of decreasing potential. When we travel through a resistor in the direction opposite to the assumed current, the iR term is positive because this represents a rise of potential.

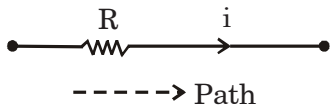

$\Delta V = V_B - V_A = -iR$

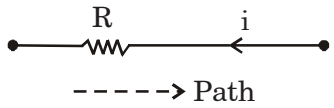

$\Delta V = V_B - V_A = +iR$

Note : It is advised to write H (for higher potential) and L (for lower potential) across all the batteries and resistances of the loop under consideration while using the loop law. Then write–moving from H to L and + for L to H. Across a battery write H on positive terminal and L on negative terminal. Across a resistance keep in mind the fact that current always flows from higher potential (H) to lower

potential (L) For example, in the loop shown in figure we have marked H and L across all batteries and resistances. Now let us apply the second law in the loop ADCBA. The equation will be,

$$+iR_2 + E_2 + iR_1 + E_1 = 0$$

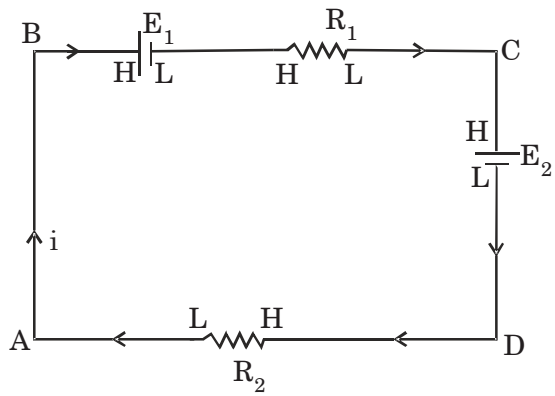

Example 10

Find currents in different branches of the electric circuit shown in figure.

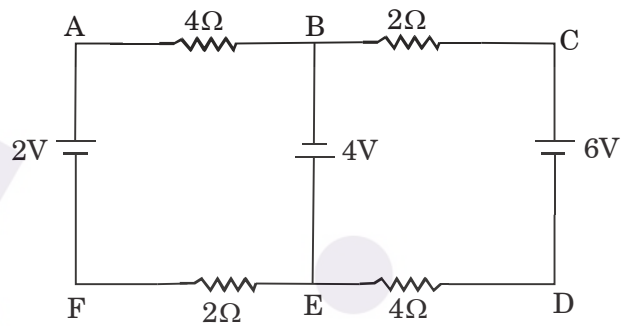

How to Proceed : In this problem there are three wires EFAB, BE and BCDE. Therefore we have three unknowns i_1, i_2 and i_3. So, we require three equations. One equation will be obtained by applying Kirchhoff's junction law (either at B or at E) and the remaining two equations, we get from the second law (loop law). We can make three loops ABEFA, ACDFA and BCDEB. But we have to choose any two of them. Further, we can choose any arbitrary direction of i_1, i_2 and i_3.

Solution. Applying Kirchhoff's first law (junction law) at junction B,

$$i_1 = i_2 + i_3 \qquad ...(i)$$

Applying Kirchhoff's second law in loop 1 (ABEFA),

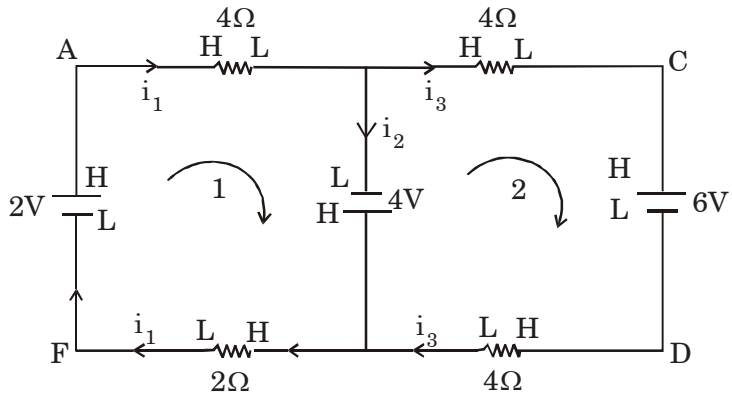

$$-4i_1 + 4 - 2i_1 + 2 = 0 \quad \text{....(ii)}$$

Applying Kirchhoff's second law in loop 2 (BCDEB).

$$-2i_3 - 6 - 4i_3 - 4 = 0 \quad \text{... (iii)}$$

Solving Eqs. (i), (ii) and (iii), we get

$$i_1 = 1A$$

$$i_2 = \frac{8}{3}A$$

$$i_3 = -\frac{5}{3}A$$

Here, negative sign of i_3 implies that current i_3 is in opposite direction of what we have assumed.

Example 11

In previous example find the potential difference between points F and C.

How to Proceed : To find the potential difference between any two points of a circuit you have to reach from one point to the other via any path of the circuit. It is advisable to choose a path in which we come across the least number of resistors preferably a path which has no resistance.

Solution. Let us reach from F to C via A and B,

$$V_F + 2 - 4i_1 - 2i_3 = V_C$$

$$\therefore \quad V_F - V_C = 4i_1 + 2i_3 - 2$$

Substituting, $i_1 = 1A$ and $i_3 = -\frac{5}{3}A$, we get

$$V_F - V_C = -\frac{4}{3} \text{ volts}$$ **Ans.**

Here negative sign implies that $V_F < V_C$.

5. INTERNAL RESISTANCE (r) AND POTENTIAL DIFFERENCE (V) ACROSS THE TERMINALS OF A BATTERY

The potential difference across a real source in a circuit is not equal to the emf of the cell. The reason is that charge moving through the electrolyte of the cell encounters resistance. We call this the internal resistance of the source, denoted by r. If this resistance behaves according to Ohm's law r is constant and independent of the current i. As the current moves through r, it experiences an associated drops in potential equal to ir. Thus, when a current is drawn through a source, the potential difference between the terminals of the source is,

$$V = E - ir$$

This can also be shown as below :

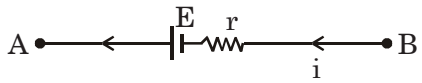

$$V_A - E + ir = V_B$$

or $$V_A - V_B = E - ir$$

Following three special cases are possible :

(i) If the current flows in opposite direction (as in case of charging of a battery), then $V = E + ir$.

(ii) $V = E$, if the current through the cell is zero.

(iii) $V = 0$, if the cell is short circuited.

This is because current in the circuit

$$i = \frac{E}{r}$$

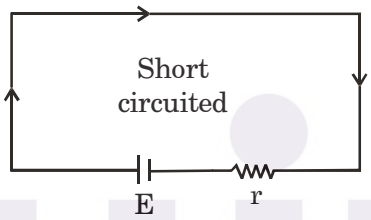

or $$E = ir$$

$\therefore$ $$E - ir = 0$$

or $$V = 0$$

Thus, we can summaries it as follows :

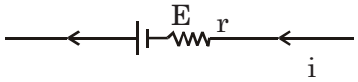	$V = E - ir$	or	$V < E$
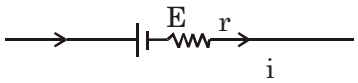	$V = E + ir$	or	$V > E$
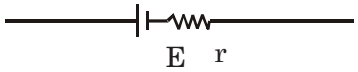	$V = E$	if	$i = 0$
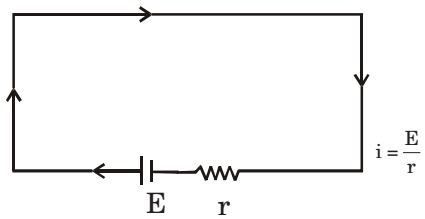	$V = 0$ is short circuited		

Important Points to Remember

1. **In figure (a) :** There are eight wires and hence, will have eight currents or eight unknowns. The eight wires are AB, BC, CE, EA, AD, BD, CD and ED. Number of loops are four. Therefore, from the second law we can make only four equations. Total number of junctions are five (A, B, C, D and E). But by using the first law, we can make only four equations (one less). So, the total number of equations are eight.

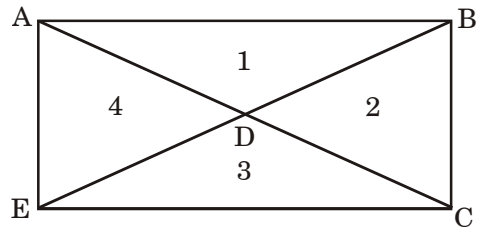

In figure (b) : Number of wires are six (AB, BC, CDA, BE, AE and CE). Number of loops are three so, three equations will be obtained from the second law. Number of junctions are four (A, B, C and E) so, we can make only three (one less) equations from the first law. But total number of equations are again six.

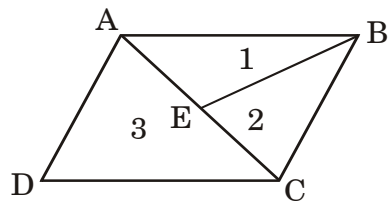

2. **Short circuiting :** Two points in an electric circuit directly connected by a conducting wire are called short circuited. Under such condition both points are as same potential.

For example, resistance R_1 in the adjoining circuit is short circuited, i.e., potential difference across it is zero. Hence, no current will flow through R_1 and the current through R_2 is therefore, E/R_2.

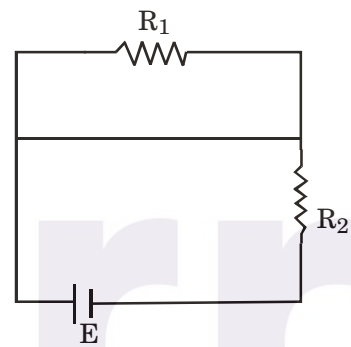

3. **Earthing :** If some point of a circuit is earthed then its potential is taken to be zero.

For example, in the adjoining figure,

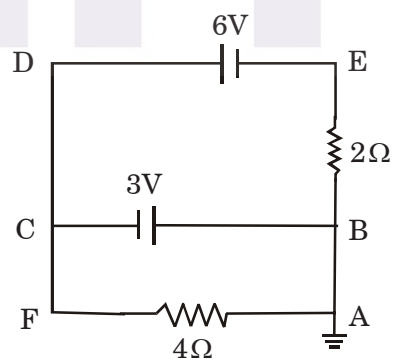

$$V_A = V_B = 0$$
$$V_F = V_C = V_D = -3V$$
$$V_E = -9V$$
$$\therefore \quad V_B - V_E = 9V$$

or current through 2Ω resistance is

$$\frac{V_B - V_E}{2} \text{ or } \frac{9}{2} \text{ A} \qquad \text{(from B to E)}$$

Similarly, $V_A - V_F = 3V$

and the current through 4Ω resistance is $\frac{V_A - V_F}{4}$ or $\frac{3}{4}$ A (from A to F)

4. For a current flow through a resistance there must be a potential difference across it but between any two points of a circuit the potential difference may be zero.

For example, in the circuit,

net emf = 6V

and net resistance = 12Ω

∴ current in the circuit, $i = \frac{6}{12} = \frac{1}{2}$ A

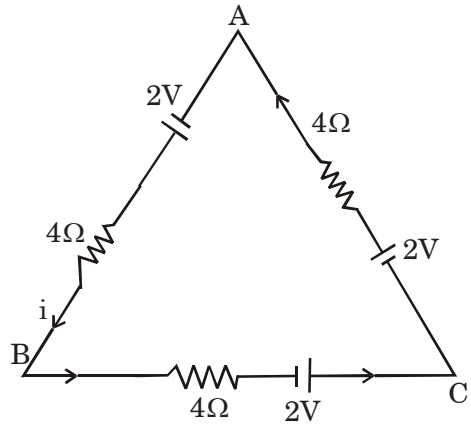

$V_A - V_B$: $V_A + 2 - 4 \times \frac{1}{2} = V_B$

or $V_A - V_B = 0$

or by symmetry, we can say that

$$V_A = V_B = V_C$$

So, the potential difference across any two vertices of the triangle is zero, while the current in the circuit is non-zero.

5. **The principle of superposition :** Complex network problems can sometimes be solved easily by using the principle of superposition. This principle essentially states that when a number of emf's act in a network, the solution is the same as the superposition of the solutions for one emf acting at a time, the others being shorted.

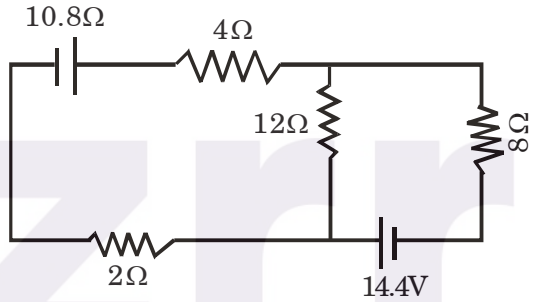

Figure shows a network with two loops. The currents in various branches can be calculated using Kirchhoff's laws. We can get the same solution by considering only one battery at a time and then superposing to two solutions. If a battery has no internal resistance, it must be left in place when the emf of the battery is removed. Figure shows how the superposition principle can be applied to the present problem.

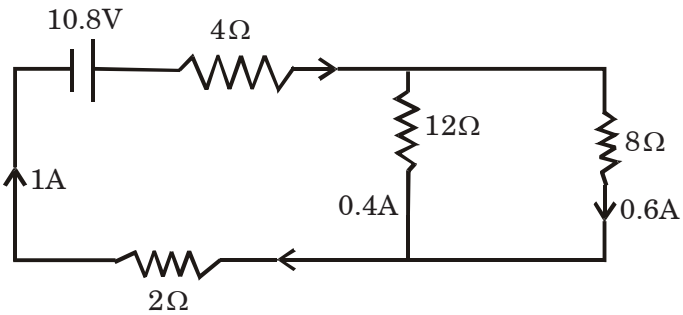

(a)

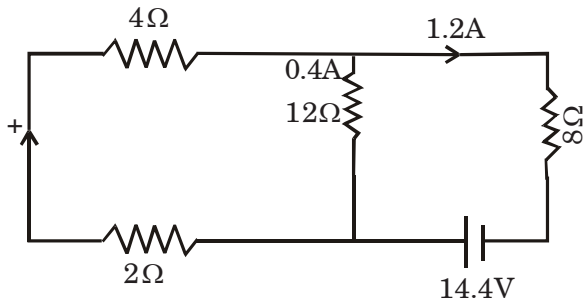

(b)

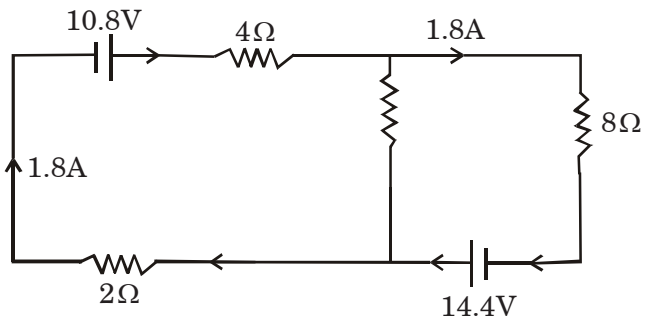

(c)

The current values in figure (a) and (b) are easily verified. For example when the 10.8 V battery alone is acting, the total resistance in the circuit is,

$$4 + \frac{12 \times 8}{12 + 8} + 2 = 10.8\Omega$$

This makes the total current $\frac{10.8\,V}{10.8\Omega}$ = 1 A. This current splits between 8Ω and 12Ω in the ratio 3 : 2.

Similarly, the total resistance when only the 14.4 V battery is acting is,

$$8 + \frac{12 \times 6}{12 + 6} = 12\Omega$$

Therefore, the total current is $\frac{14.4\,V}{12\Omega} = 1.2\,A$

The superposition principle shows that there is no current in the 12Ω resistance. Only a current of 1.8A flows through the outer loop. All these conclusions can be verified by analyzing the circuit using Kirchhoff's laws.

6. **Distribution of current in parallel connections :** When more than one resistances are connected in parallel, the potential difference across them is equal and the current is distributed among them in inverse ratio of their resistance, as

$$i = \frac{V}{R}$$

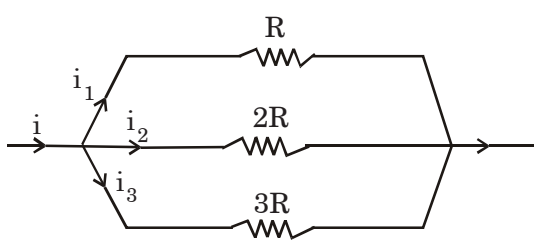

or $$i \propto \frac{1}{R} \text{ for same value of V}$$

e.g., in the figure,

$$i_3 : i_2 : i_3 = \frac{1}{R} : \frac{1}{2R} : \frac{1}{3R} = 6 : 3 : 2$$

$$\therefore \quad i_1 = \left(\frac{6}{6+3+2}\right) i = \frac{6}{11} i$$

$$i_2 = \left(\frac{3}{6+3+2}\right) i = \frac{3}{11} i \text{ and } i_3 = \left(\frac{2}{6+3+2}\right) i = \frac{2}{11} i$$

7. **Distribution of potential in series connections :** When more than one resistances are connected in series, the current through them is same and the potential is distributed in the ratio of their resistance, as

$$V = iR$$

or $$V \propto R \quad \text{for some value of i.}$$

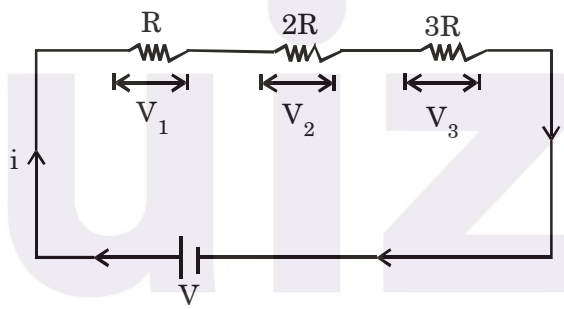

For example in the figure,

$$V_1 : V_2 : V_3 = R : 2R : 3R = 1 : 2 : 3$$

$$\therefore \quad V_1 = \left(\frac{1}{1+2+3}\right) V = \frac{V}{6}$$

$$V_2 = \left(\frac{2}{1+2+3}\right) V = \frac{2}{3}$$

and $$V_3 = \left(\frac{3}{1+2+3}\right) V = \frac{V}{2}$$

Example 12

In the circuit shown in figure, E_1 = 10 V, E_2 = 4 V, $r_1 = r_2$ = 1Ω and R = 2Ω.

Find the potential difference across battery 1 and battery 2.

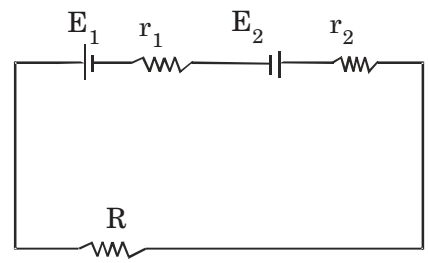

Solution. Net emf of the circuit = $E_1 - E_2$ = 6V

Total resistance of the circuit = $R + r_1 + r_2$ = 4Ω

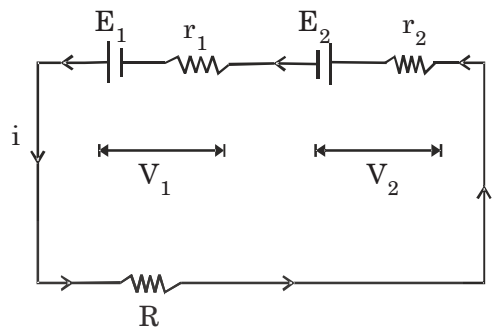

∴ Current in the circuit $i = \frac{\text{net emf}}{\text{total resistance}} = \frac{6}{4}$ = 15. A

Now, $V_1 = E_1 - ir_1 = 10 - (1.5)\ (1)$

$= 8.5$ volt

and $V_2 = E_2 + ir_2 = 4\ (1.5)\ (1)$

$= 5.5$ volt

6. HEATING EFFECTS OF CURRENT

An electric current through a resistor increases its thermal energy. Also, there are other situations in which an electric current can produce or absorb thermal energy.

6.1. POWER SUPPLIED OR POWER ABSORBED BY A BATTERY

When charges are transported across a source of emf, their potential energy changes. If a net charge Δq moves through a potential difference E in a time Δt, the change in electric potential energy of the charge is EΔq. Thus, the source of emf does work,

$$\Delta W = E\ \Delta q$$

Dividing both sides by Δt, then taking the limit as $\Delta t \to 0$, we find,

$$\frac{dW}{dt} = E\frac{dq}{dt}$$

By definition, $\frac{dq}{dt}$ = i, the current through the battery and $\frac{dW}{dt}$ = P, the power output of (or input to) the battery, Hence,

$$P = Ei$$

The quantity P represents the rate at which energy is transferred from a discharging battery or to a charging battery.

Energy is transferred from the source at a rate Ei

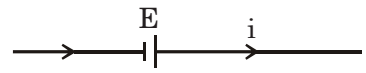

Energy is transferred to the source at a rate Ei.

6.2. POWER DISSIPATED ACROSS A RESISTANCE

Now let's consider the power dissipated in a conducting element. Suppose it has a resistance R and the potential difference between its ends is V. In moving through the element from higher to lower potential, a positive charge Δq loses energy $\Delta U = V\,\Delta q$. This electric energy is absorbed by the conductor through collisions between its atomic lattice and the charge carriers, causing its temperature to rise. This effect is commonly called Joule heating. Since power is the rate at which energy is transferred, we have,

$$P = \frac{\Delta U}{\Delta t} = V.\frac{\Delta q}{\Delta t} = Vi$$

$$\boxed{P = Vi}$$

which with the help of Ohm's law can also be written in the forms,

$$P = i^2R \qquad \text{or} \qquad P = \frac{V^2}{R}$$

Power is always dissipated in a resistance. With this rate the heat produced in the resistor in time t is,

$$H = Pt$$

$$\boxed{H = Vit = i^2Rt = \frac{V^2}{R}t}$$

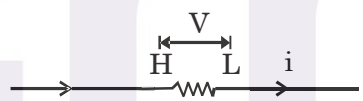

Joule heating occurs whenever a current passes through an element that has resistance. To prevent the overheating of delicate electronic components, many electric devices like video cassette recorders, televisions and computer monitors have fans in their chassis to allow some of the heat produced to escape.

Example 13

In the circuit shown in figure, find

(a) **the power supplied by 10V battery**

(b) **the power consumed by 4V battery and**

(c) **the power dissipated in 3Ω resistance.**

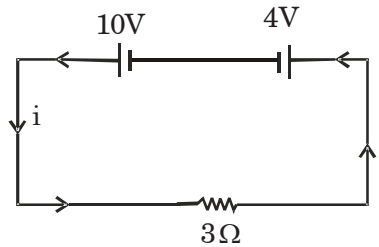

Solution. Net emf of the circuit = (10 – 4) V = 6V

Total resistance of the circuit = 3Ω

$\therefore$ Current in the circuit $i = \dfrac{\text{net emf}}{\text{total resistance}} = \dfrac{6}{3} = 2\,A$

(a) Power supplied by 10 V battery = Ei = (10) (2) = 20 watt **Ans.**

(b) Power consumed by 4 V battery = Ei = (4) (2) = 8 watt **Ans.**

(c) Power consumed by 3Ω resistance = $i^2R = (2)^2\,(3) = 12$ watt **Ans.**

Note : Here we can see that total power supplied by 10V battery (i.e. 20 watt) = power consumed by 4 V battery and 3Ω resistance. Which proves that conservation of energy holds good in electric circuits also.

Example 14

In the circuit shown in figure, find the heat developed across each resistance in 2 seconds.

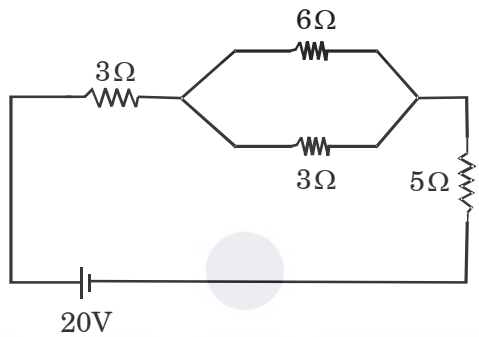

Solution. The 6Ω and 3Ω resistances are in parallel. So their combined resistance is,

$$\frac{1}{R} = \frac{1}{6} + \frac{1}{3} = \frac{1}{2} \quad \text{or} \quad R = 2\Omega$$

The equivalent simple circuit can be drawn as shown.

Current in the circuit,

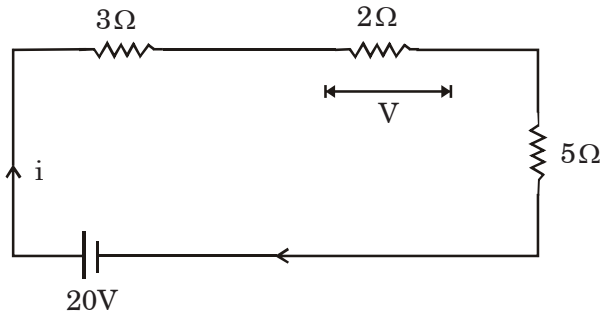

$$i = \frac{\text{net emf}}{\text{total resistance}} = \frac{20}{3+2+5} = 2\,A$$

$$V = iR = (2)\,(2) = 4 \text{ volt}$$

i.e., potential difference across 6Ω and 3Ω resistances are 4 volt. Now,

$$H_{3\Omega} = i^2Rt = (2)2\ (3)\ (2) = 24 \text{ Joule}$$

$$H_{6\Omega} = \frac{V^2}{R}t = \frac{(4)^2}{6}(2) = \frac{16}{3}\text{Joule}$$

$$H_{3\Omega} = \frac{V^2}{R}t = \frac{(4)^2(2)}{3} = \frac{32}{3}\text{Joule}$$

and $$H_{5\Omega} = i^2Rt = (2)^2(5)\ (2) = 40 \text{ Joule}$$ **Ans.**

Example 15

Find the current in each branches of the circuit.

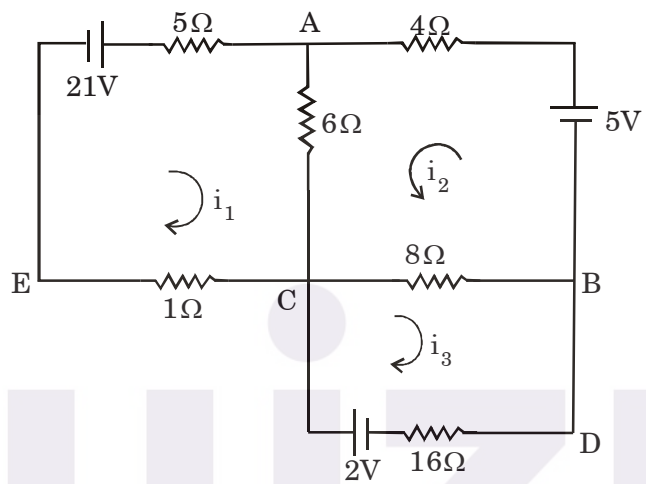

Solution. It is possible to use Kirchhoff's laws in a slightly different form, which may simplify the solution of certain problems. This method of applying Kirchhoff's laws is called the loop current method.

In this method we assign a current to every closed loop in a network.

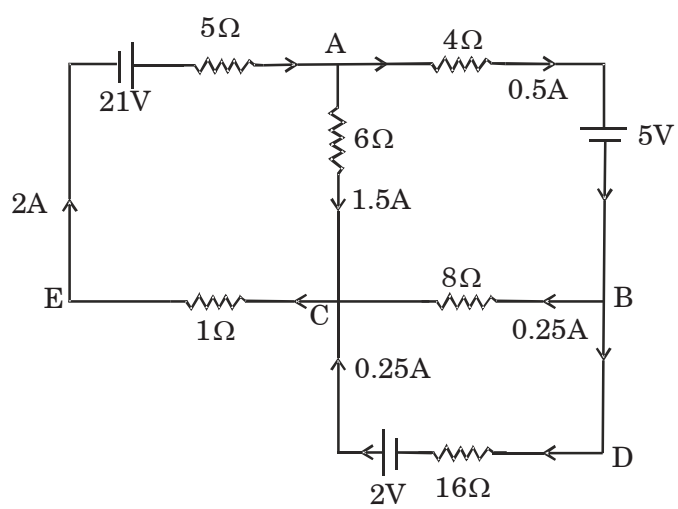

Suppose current i_1, i_2 and i_3 are flowing in the three loops. The clockwise or anticlockwise sense given to these currents is arbitrary. Applying Kirchhooff's second law to the three loops, we get

$$21 - 5i_1 - 6\,(i_1 + i_2) - i_1 = 0 \quad ....(i)$$

$$5 - 4i_2 - 6\,(i_1 + i_2) - 8\,(i_2 + i_3) = 0 \quad ...(ii)$$

and

$$2 - 8\,(i_2 + i_3) - 16i_3 = 0 \quad ....(iii)$$

Solving these three equations, we get

$$i_1 = 2A, \quad i_2 = -\frac{1}{2}A \quad \text{and} \quad i_3 = \frac{1}{4}A$$

Therefore, current in different branches are as shown in fig. 11.82.

Note : In wire AC, current is $i_1 + i_2$ and in CB it is $i_2 + i_3$. So, are has to be taken while applying the loop law.

Example 16

In which branch of the circuit shown in figure a 11 V battery be inserted so that it dissipates minimum power. What will be the current through the 2Ω resistance for this position of the battery ?

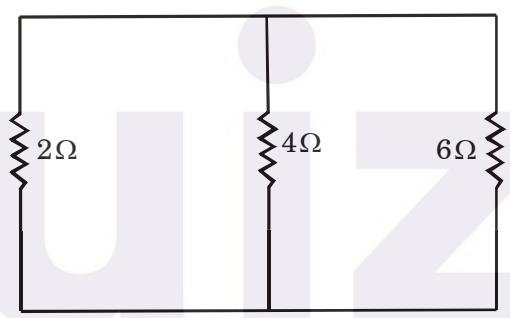

Solution. Suppose, we insert the battery with 2Ω resistance. Then we can take 2Ω as the internal resistance (r) of the battery and combined resistance of the other two as the external resistance (R). The circuit in that case shown in Fig.

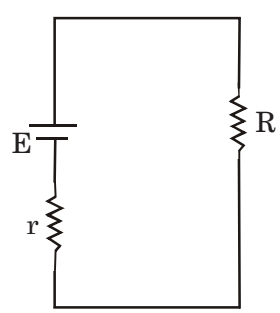

Now power, $$P = \frac{E^2}{R + r}$$

This power will be minimum where R + r is maximum and we can see that (R + r) will be maximum when the battery is inserted with 6Ω resistance as shown in Fig. below :

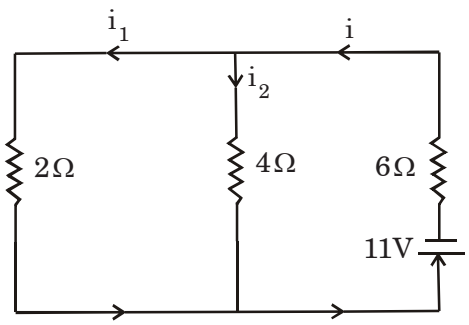

$$6 + \frac{2 \times 4}{2 + 4} = \frac{22}{3}\Omega$$

$$\therefore \qquad i = \frac{11}{22/3} = 1.5\,A$$

This current will be distributed in 2Ω and 4Ω in the inverse ratio of their resistances.

$$\frac{i_1}{i_2} = \frac{4}{2} = 2$$

$$i_1 = \left(\frac{2}{2+1}\right)(1.5) = 1\,A$$ **Ans.**

Example 17

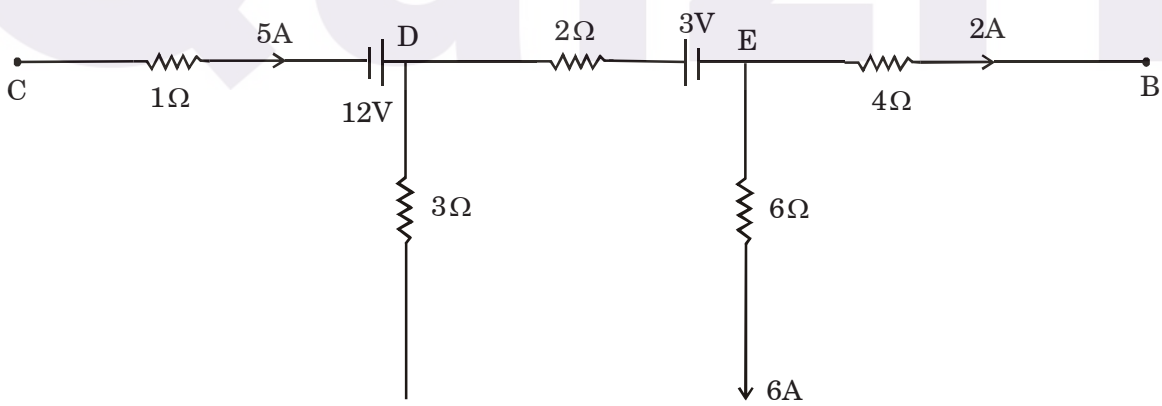

Figure shows part of a circuit. Calculate the power dissipated in 3Ω resistance. What is the potential difference $V_C - V_B$?

Solution. Applying Kirchhoff's junction law at E current in wire DE is 8A from D to E. Now further applying junction law at D. The current in 3Ω resistance will be 3 A towards D.

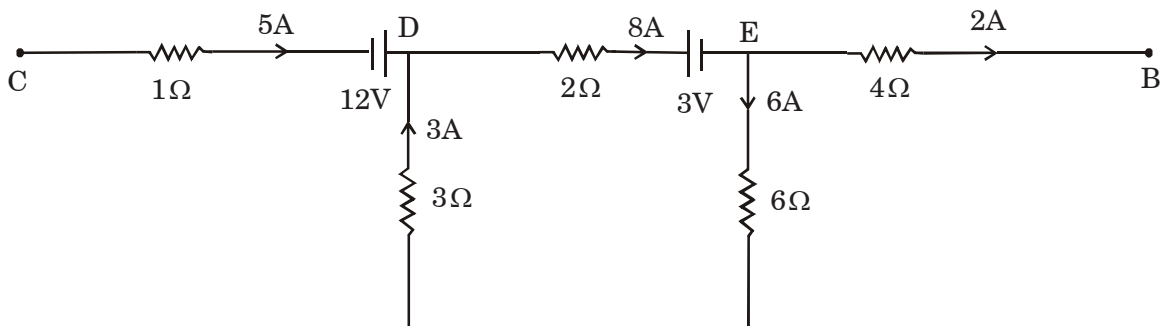

Power dissipated in 3Ω resistance = $i^2R = (3)^2\ (3)$

$= 27$ watt

$V_C - V_B$: $V_C - 5 \times 1 + 12 - 8 \times 2 - 3 - 4 \times 2 = V_B$

$\therefore$ $V_C - V_B = 5 - 12 + 16 + 3 + 8$

or $V_C - V_B = 20$ volt **Ans.**

7. SYMMETRY METHODS OF FINDING EQUIVALENT RESISTANCES

I. Points (junctions) which are symmetrically located relative to initial and final points (say A and B respectively) are EQUIPOTENTIAL and hence any circuit element (resistor, capacitor, industor) between these 2 points can be removed from the circuit.

Illustration

In the given cube (12345678) find the equivalent resistance between the function :

(i) **1 and 8**

(ii) **1 and 3**

(iii) **1 and 2**

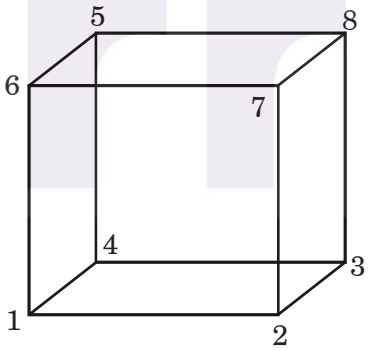

Sol. (i) **Between 1 and 8**

In this case note that the points (2, 4, 6) are symmetrically located from the initial point and final point and (3, 7, 5) are also symmetrically located with respect to initial and final points.

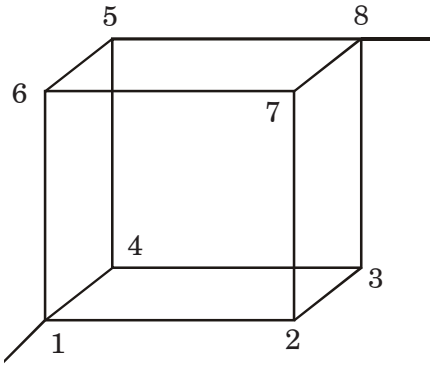

How to find the symmetrical points ?

(i) With respect to initial points, the points must be equidistant (in terms of resistances, of course) and the same points must also be equidistant (not necessarily having the same distance as initial points). Then these are said to be equipotential points.

> **Tip :** In any circuit element, if there is no current through it, then it can be removed from the circuit.

After finding the equipotential points, remove the circuit elements if any connected between these points and else, you can also join these equipotential points.

Re-draw the circuit : Placing the equipotential points as shown.

1.

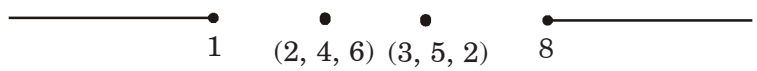

2.

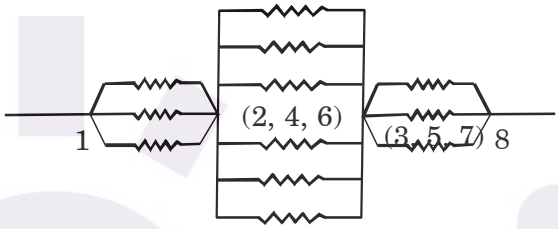

Net equivalent resistance = $\left(\frac{R}{3}\right)+\left(\frac{R}{6}\right)+\left(\frac{R}{3}\right)=\left(\frac{5R}{6}\right)$

(ii) Between the points 1 and 3 :

(2, 4) and (5, 7) are equipotential junction points.

Re-draw the circuit

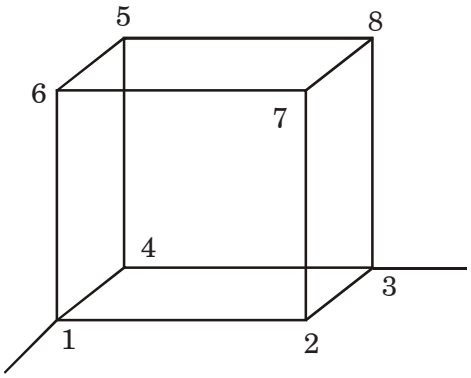

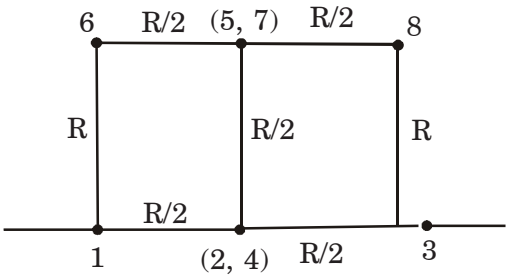

The above structure is a wheatstone bridge

$\therefore$ Req. = $\left(\frac{3R}{4}\right)$

(iii) **Between 1 and 2**

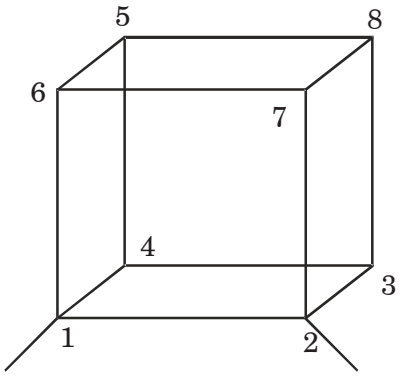

(4, 6) and (3, 7) are equipotential junction pairs.

Hence,

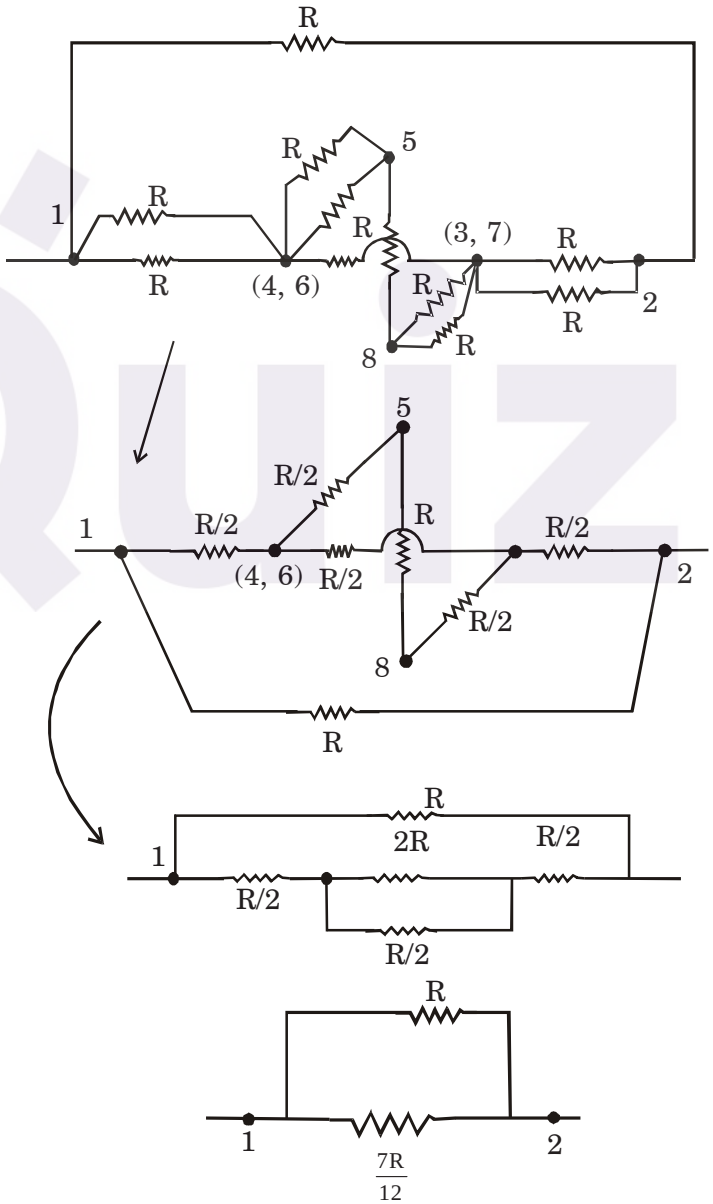

$$\text{Req.} = \frac{7R}{12}$$

Another simplified circuit

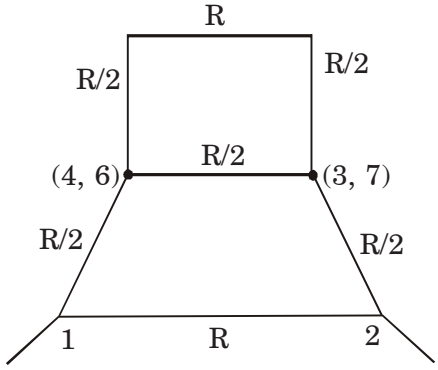

$$\text{Req.} = \frac{7R}{12}$$

II. If the line joining the initial and final point (i.e AB) is the axis of symmetry, then all points lying on the perpendicular of the line AB are **equipotential**.

eg.

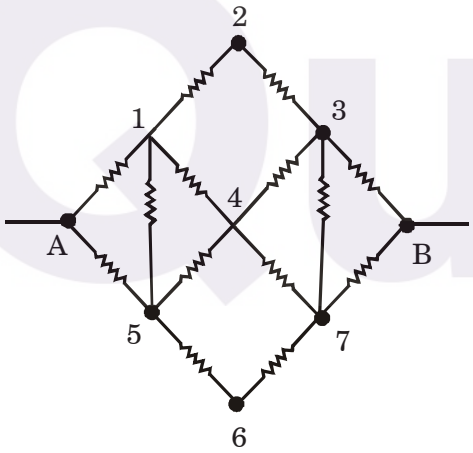

In this network points (2,4, 6), (1,5) and (3, 7) are equipotential.

Hence, Remove the circuit elements present between them.

Simplify the circuit.

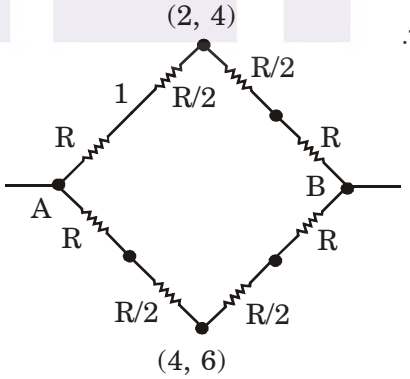

$$\therefore \text{Req.} = \left(\frac{3R}{2}\right)$$

III. If the line AB is not the axis of symmetry, but its perpendicular bisector is the axis of symmetry, then all points lying on the perpendicular bisector are equipotential.

Illustration

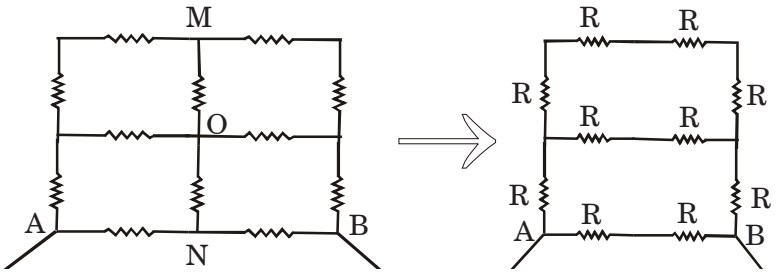

Req. = $\left(\frac{5R}{4}\right)$

Here, (M,O,N) are equipotential points and hence, OM, ON resistors can be removed from the circuit.

IV. Connection Removal Method (Image Method) :

Conditions to apply this method :

(1) Circuit should be symmetric relative to the initial and final points.

(2) If we place a mirror perpendicular to the line AB in such a way that image of A becomes the image of B, then we can apply this method.

You cannot apply the image method is the cases as one shown be.

These two must be same to apply image method.

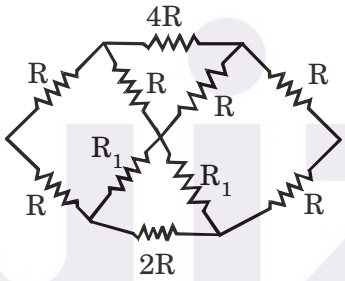

Concept : The current in the resistor and its image are equal.

NOTE : If the resistor and its image coincide at a junction, then the junction can be separated from other.

Illustration

Find the net resistance between A and B

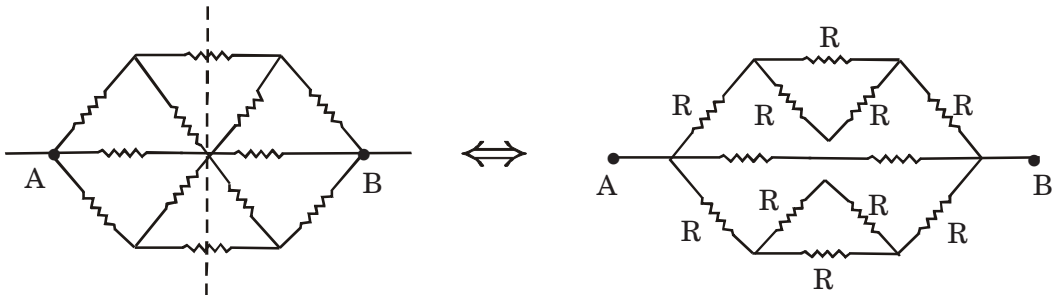

Req. = $\left(\frac{4R}{5}\right)$

Illustration

Find net resistance between 5 and 7.

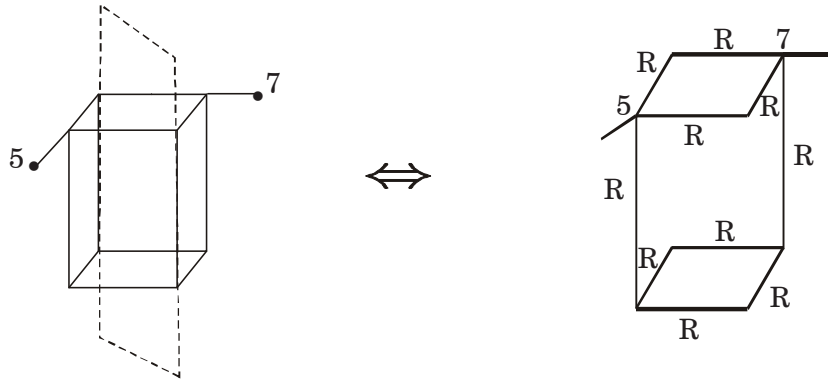

$$R_{eq.} = \left(\frac{3R}{4}\right)$$

V. Star-Delta Method

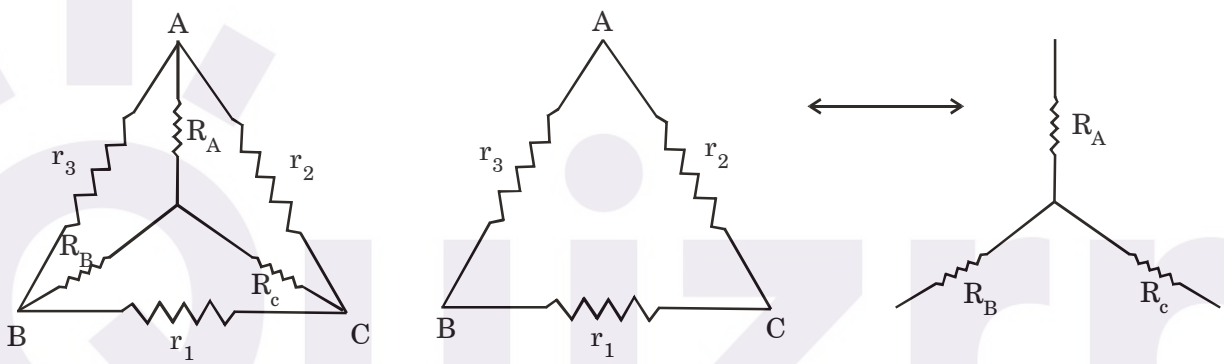

(Delta) (Star)

(i) **Delta to star conversion**

$$R_A = \frac{r_2 r_3}{r_1 + r_2 + r_3} \qquad R_B = \frac{r_3 r_1}{r_1 + r_2 + r_3} \qquad R_C = \frac{r_1 r_2}{r_1 + r_2 + r_3}$$

Illustration

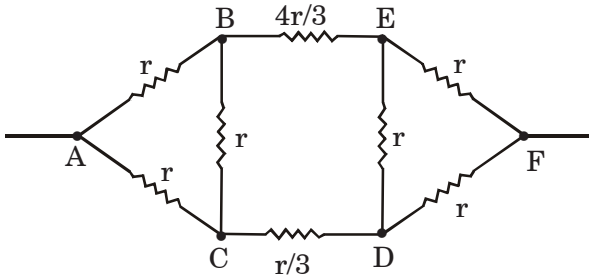

Find the equivalent resistance between A and F.

Solution :

Symmetry methods do not apply in above such problems.

Convert delta to star for ABC and DEF

ABC and DEF are similar

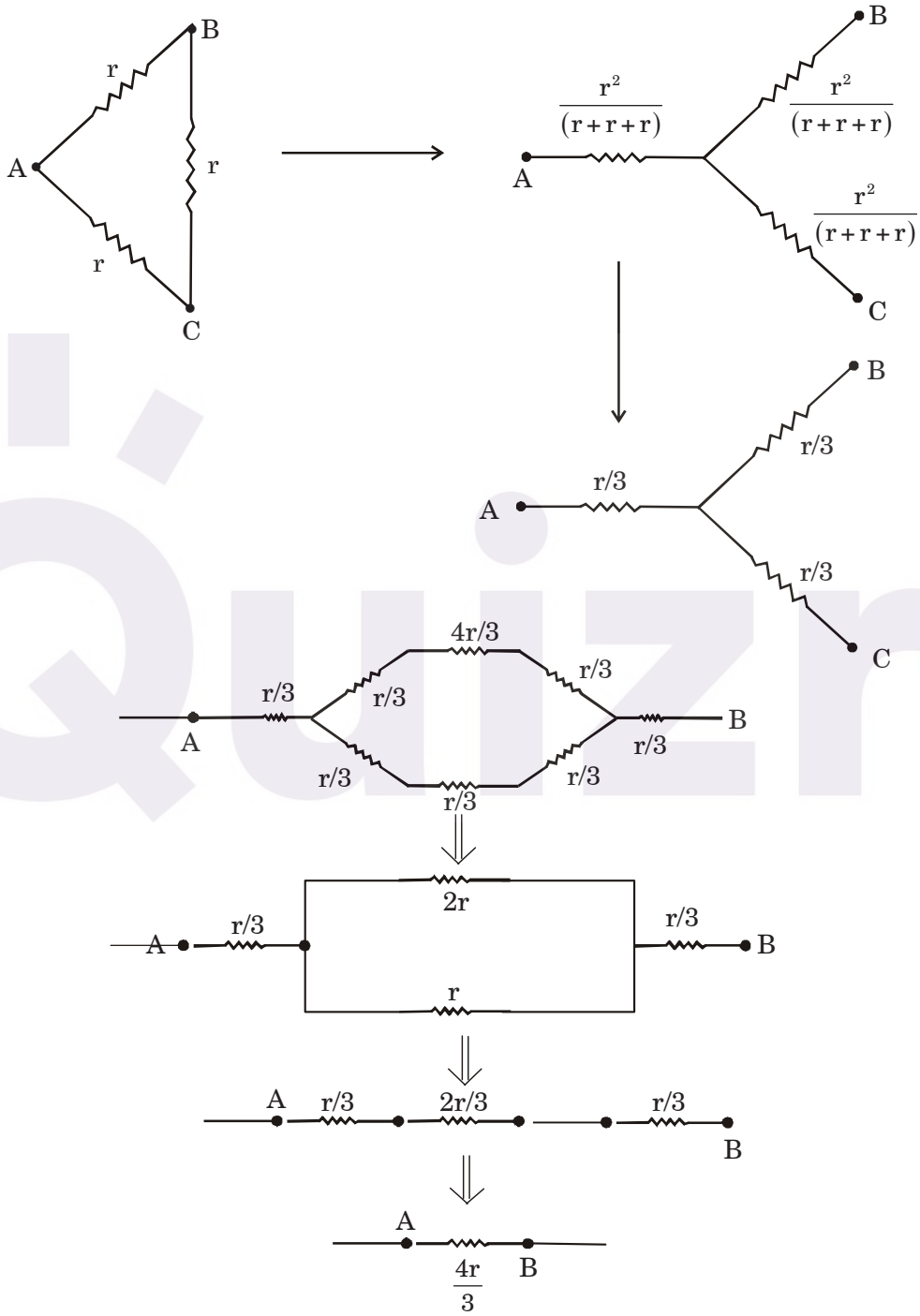

$$\text{Req.} = \frac{4r}{3}$$

(ii) Star to delta conversion

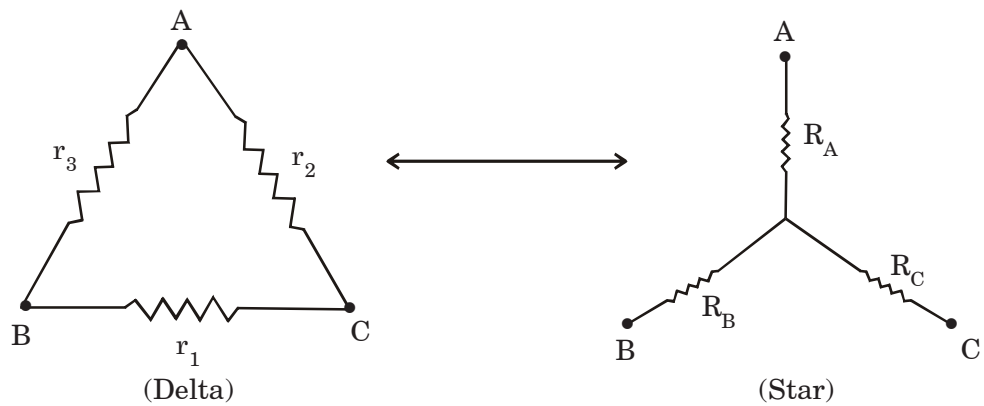

$$r_1 = \frac{R_A R_B + R_B R_C + R_C R_A}{R_A}$$

$$r_2 = \frac{R_A R_B + R_B R_C + R_C R_A}{R_B}$$

$$r_3 = \frac{R_A R_B + R_B R_C + R_C R_A}{R_C}$$

Illustration :

Find equivalent resistance between A and B.

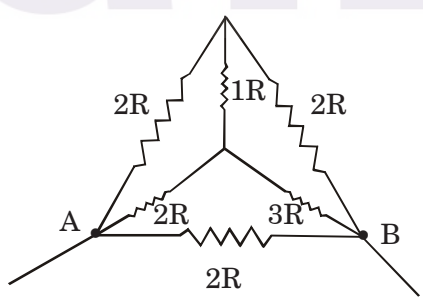

Solution. Convert star to Delta.

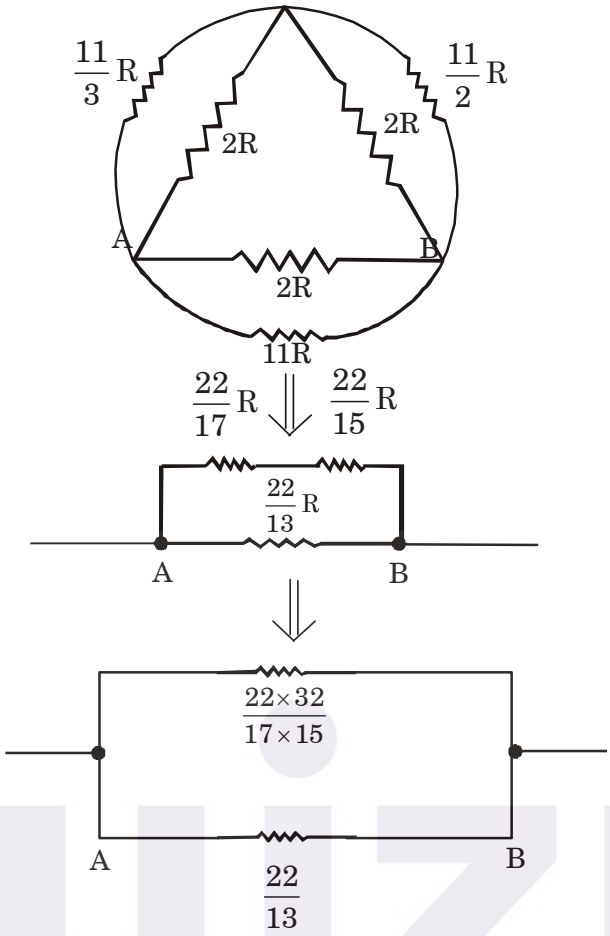

Req. = 1.049

Example 18

8 resistors are connected along the sides of a pyramidal network as shown. Find the equivalent resistance between

(i) **AC**

(ii) **AB**

(iii) **OA**

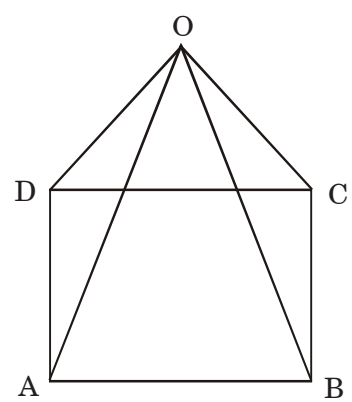

(i) **Between AC :** Redraw the circuit

Symmetry about line AC.

Hence applyimage method

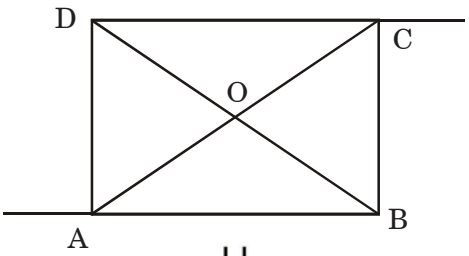

$\therefore$ Req. = $\left(\frac{2R}{3}\right)$ (after removing OD and DB)

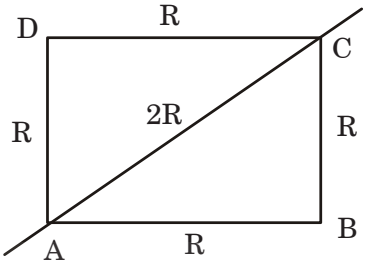

(ii) **About AB :** Apply image method

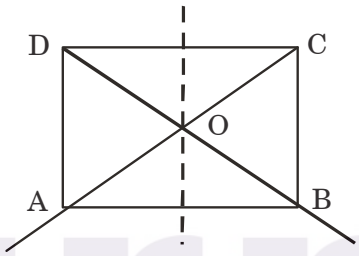

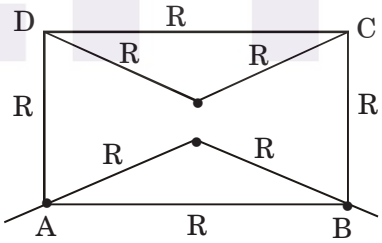

Req. = $\frac{8R}{15}$

(iii) **About OA :** (D, B) are equipotential points.

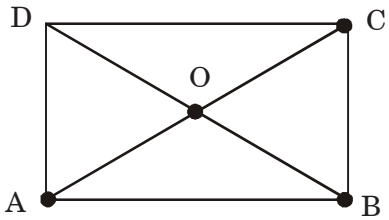

Hence

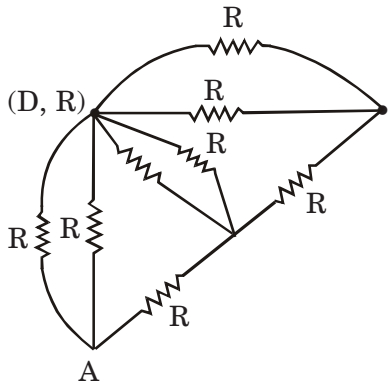

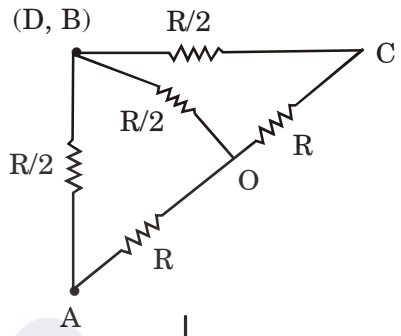

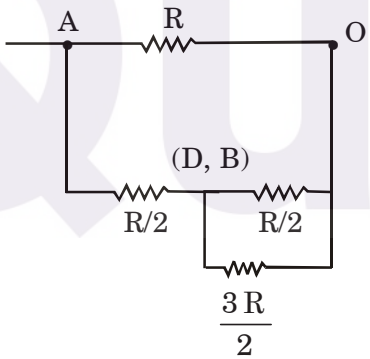

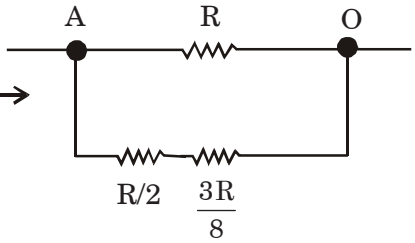

$$\text{Req.} = \frac{7}{15}R$$

Example 19

Find the equivalent resistance between A and B.

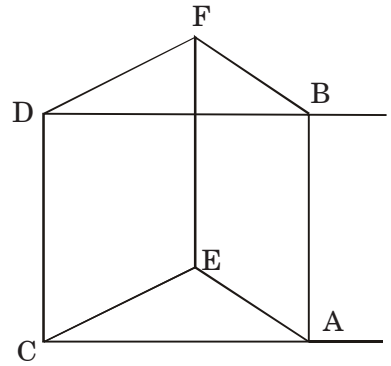

Solution. Apply rule 1.

(D, F) and (C, E) are equipotential junctions.

Hence, remove the resistors connected between them

(i.e.) DF and CE

Simplified circuit :

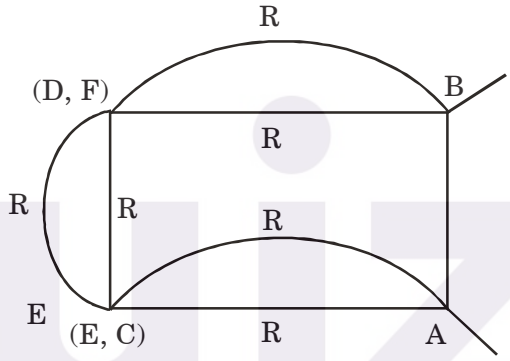

$$\text{Req.} = \left(\frac{3R}{5}\right)$$

Example 20

Find the equivalent resistance between AB.

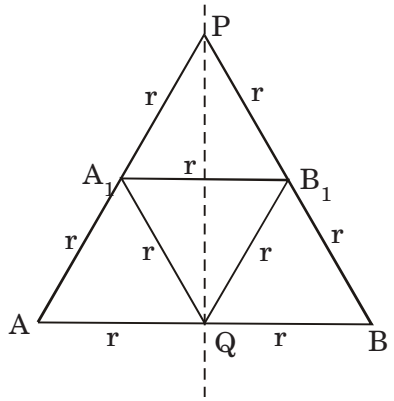

Solution. Apply image method

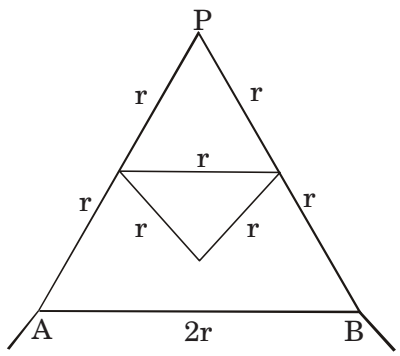

$$\text{Req.} = \left(\frac{10r}{9}\right)$$

Example 21

In previous question, the question is extended and there are infinite triangular networks embedded is each other as shown, then find the equivalent resistance between AB.

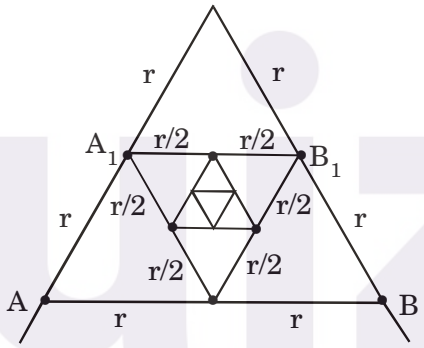

Solution. Let the resistance between A and B be x.

Then the smaller triangle with A_1B_1 has resistances hall in each arm compared to the triangle with AB.

Hence the equivalent resistance between A, B, = $\frac{x}{2}$

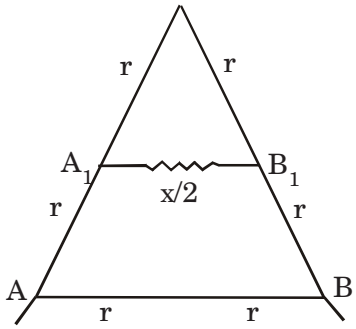

$$(\text{Req.})_{AB} = \frac{\left[\left(\frac{2xr}{4r+x}\right)+2r\right]2r = x}{\left(\frac{2xr+4r}{4r+x}\right)}$$

$$\Rightarrow \qquad x = \frac{4(\sqrt{7}-1)r}{6}$$

8. GROUPING OF CELLS

8.1. Grouping of Identical Cells

ε is the emf of each cell and r is the internal resistance

1. Series grouping

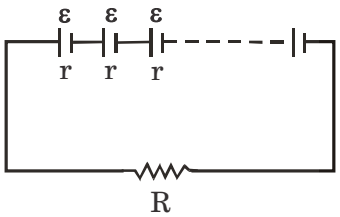

$$I = \frac{n\varepsilon}{(R+nr)}$$

In the series grouping

$$\varepsilon_{eq} = (n\varepsilon)$$

$$\text{Req} = (nr)$$

When R > > r,

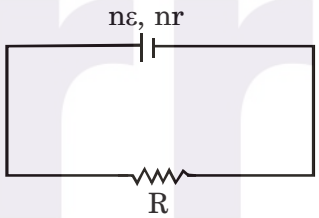

$$I = \left(\frac{n\varepsilon}{R}\right)$$

∴ The series grouping is ideal when R > > r.

2. Parallel grouping

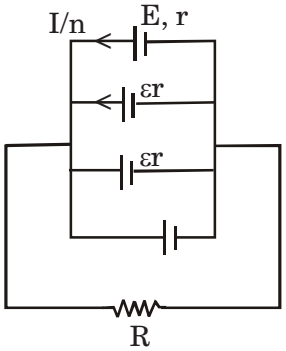

$$\therefore \qquad I = \frac{\varepsilon}{R+\left(\frac{r}{n}\right)} = \frac{n\varepsilon}{(nR+r)}$$

$$\therefore \qquad \varepsilon_{eq} = \varepsilon,\ \text{Req} = \left(\frac{r}{n}\right)$$

When r > > R

$$I = \left(\frac{n\varepsilon}{r}\right)$$

Hence parallel grouping becomes effective when (R < < r).

3. Mixed grouping

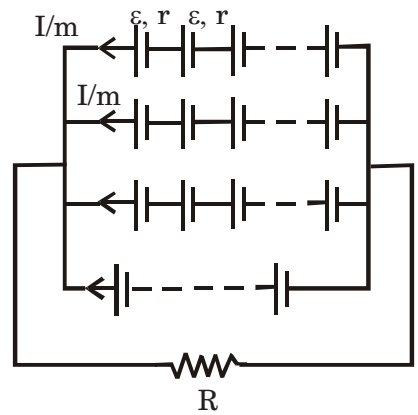

n = no. of cells in each row.

m = no. of row

$$\therefore \quad I = \frac{n\varepsilon}{R + \left(\frac{nr}{m}\right)}$$

$$\therefore \quad \boxed{I = \frac{mn\varepsilon}{(mR + nr)}}$$

Combination for maximum current

It is maximum when (mR + nr) is minimum

$$(mR + nr) = \left(\sqrt{mR}\right)^2 + \left(\sqrt{nr}\right)^2$$

$$= \left(\sqrt{mR} - \sqrt{nr}\right)^2 + \sqrt{4mnrR}$$

$$= \left(\sqrt{mR} - \sqrt{nr}\right)^2 + 2\sqrt{mnrR}$$

$$\therefore \quad (mR + nr)\ \text{min} = 2\sqrt{mnrR}\ , \text{ when } \sqrt{mR} = \sqrt{nr}$$

For maximum current output through load

$$mR = nr$$

$$I = \frac{mn\varepsilon}{mR + nr} = \frac{mn\varepsilon}{2mR} = \frac{n\varepsilon}{2R} = \left(\frac{m\varepsilon}{2r}\right)$$

Example 22

40 identical cells each of emf = 6V and internal resistance 1Ω are to be connected across a load of R = 10Ω. Find the most effective grouping ?

Solution. In the most effective grouping the current through the load is maximum.

Let n cells be series of each row, with network having m rows.

We have $\boxed{mn = N} = 40$

For maximum current

$$\boxed{mR = (nr)}$$

$$m\ (10) = (1)\ n$$

$$\therefore \quad n = 10\ m$$

$$\Rightarrow \quad 10m^2 = 40 \qquad \therefore\ (m = 2)$$

$\therefore \qquad n = 20$

$$I = \frac{mn\varepsilon}{2\sqrt{mnR}} = \frac{mn\varepsilon}{2mR} = \frac{20\times 6}{2\times 10} = 6A$$

Most effective grouping must have 20 cells in each row with 2 rows, in all.

8.2. GROUPING OF DISSIMILAR CELLS

(1) Series grouping

$$I = \frac{(\varepsilon_1 + \varepsilon_2 .....\varepsilon_n)}{R + (r_1 + r_2 + ...r_n)}$$

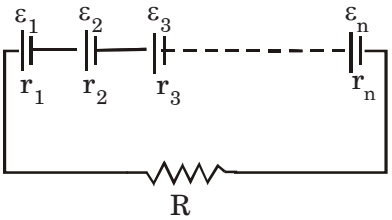

$$\boxed{I = \frac{\sum_{i=1}^{n} \varepsilon_i}{R + \sum_{i}^{n} r_i}}$$

$$\varepsilon_{eq} = \sum_{i=1}^{n} \varepsilon_i$$

$$Req. = \sum_{i=1}^{n} r_i$$

(2) Parallel grouping : First we will derive for two cells, then we will generalize the result.

$$I = (i_1 + i_2)$$

$$i_1 = \frac{(\varepsilon - IR)}{r_1} \; ; \; i_2 = \left(\frac{\varepsilon - IR}{r_2}\right)$$

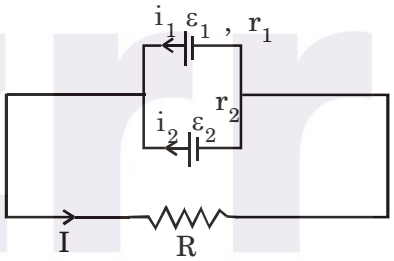

$$\therefore \qquad I = \left(\frac{\varepsilon - IR}{r_1}\right) + \left(\frac{\varepsilon - IR}{r_2}\right)$$

$$= I\left[1 + \frac{R}{r_1} + \frac{R}{r_2}\right] = \left(\frac{\varepsilon_1}{r_1} + \frac{\varepsilon_2}{r_2}\right)$$

$$\therefore \qquad I = \frac{\left[\frac{\varepsilon_1}{r_1} + \frac{\varepsilon_2}{r_2}\right]}{\left[R\left(\frac{1}{r_1} + \frac{1}{r_2}\right) + 1\right]} = \frac{\left[\left(\frac{\varepsilon_1}{r_1}\right) + \left(\frac{\varepsilon_2}{n}\right)\right]\left[\frac{1}{r_1} + \frac{1}{r_2}\right]^{-1}}{\left[R + \left(\frac{1}{r_1} + \frac{1}{r_2}\right)^{-1}\right]}$$

$$\therefore \qquad I = \frac{\left[\left(\frac{\varepsilon_1}{r_1} + \frac{\varepsilon_2}{r_2}\right)\left(\frac{1}{r_1} + \frac{1}{r_2}\right)^{-1}\right]}{\left[R + \left(\frac{1}{r_1} + \frac{1}{r_2}\right)^{-1}\right]}$$

In general,

$$I = \frac{\Sigma\left(\frac{\varepsilon_i}{r_i}\right)\left[\Sigma\frac{1}{r_i}\right]^{-1}}{R + \left(\Sigma\frac{1}{r_i}\right)^{-1}}$$

or,

$$\boxed{I = \frac{\left[\Sigma\left(\frac{\varepsilon_i}{r_i}\right)\right]r_{eq}}{R + (r_{eq})}} \qquad \text{where } \left(\frac{1}{r_{eq}} = \frac{1}{r_1} + \frac{1}{r_2} + \frac{1}{r_3} + \ldots \frac{1}{r_n}\right)$$

Example 23

12 identical cells are given, each of emf ε, and internal resistance r, and are connected in series and kept in a box. Same cells are wrongly connected by mistake. Now, when the box is connected in series with two other identical cells, the current is 3A, when they support each other and is 2A, when they oppose each other.

Solution. Let the no of wrongly connected cells be x

∴ Net emf is series combination

$= + (N - x)\,\varepsilon - x\varepsilon = (N - 2x)\,\varepsilon = (12 - x)\,\varepsilon$ $\{\because N = 12\}$

Tip : 1. When in series combination, a cell is wrongly connected, then its emf is added as –ε.
2. If out of N cells is series, x are wrongly connected, net emf = (N – 2x) ε.

Now, $$\frac{(12-2x)\,\varepsilon + 2\varepsilon}{14r} = 3 \qquad \ldots(1)$$

when wrongly connected, $$\frac{(12-2x)\varepsilon - 2\varepsilon}{14r} = 2 \qquad \ldots(2)$$

Divide (1) and (2)

$$\frac{(14-2x)}{(10-2x)} = \left(\frac{3}{2}\right)$$

∴ x = 1

9. Maximum Power Transfer Theorem

"For maximum power (i.e. maximum current) being dissipated through an external load, connected in a circuit with battery of internal resistance r, the external resistance must be equal to internal resistance of the battery."

Derivation :

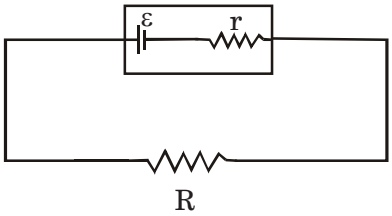

$$i = \frac{\varepsilon}{(R+r)}$$

$$\therefore \qquad P = i^2R = \frac{\varepsilon^2 R}{(R+r)^2}$$

Differentiate P wrt R,

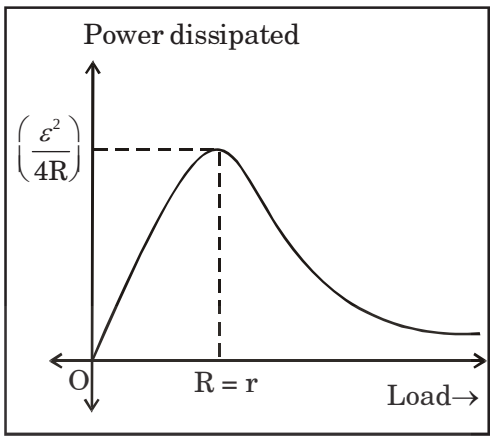

$$\left(\frac{dP}{dR}\right) = \frac{\varepsilon^2(R+r)^2 - \varepsilon^2 R[2(R+r)]}{(R+r)^4}$$

$$= \frac{\varepsilon^2[R^2 + r^2 + 2Rr - 2R^2 - 2rR)]}{(R+r)^4}$$

$$= \frac{\varepsilon^2(r-R)}{(R+r)^3}$$

Hence, $\left(\frac{dP}{dR}\right) = 0$, when $(r = R)$

Hence power dissipated is maximum when $(r = R)$.

10. CHARGING AND DISCHARGING OF CAPACITORS

10.1 Charging of Capacitor

So, far, we have been concerned with the capacitors in the steady state, i.e. the capacitors which have already been charged to their steady state voltages.

Now consider a circuit where an uncharged capacitor C is connected to a cell of emf E through a resistance R.

Applying loop rule

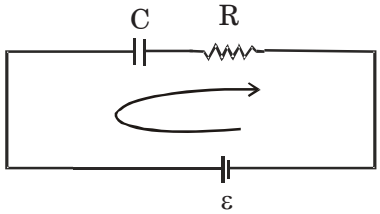

$$\frac{q}{c} + iR = \varepsilon$$

$$iR = \left(\varepsilon - \frac{q}{c}\right)$$

Now, due to the flow of corrent, the upper plate begins to acquire positive charge and lower becomes negetively charged. The voltage across capacitor begins to grow.

$$\Rightarrow \quad R\left(\frac{dq}{dt}\right) = \left(\frac{CE - q}{C}\right)$$

$$\Rightarrow \quad RC\left(\frac{dq}{dt}\right) = (CE - q)$$

$$\Rightarrow \quad \int_{q_0}^{q(t)} \frac{dq}{(CE - q)} = \int_0^t \frac{dt}{RC}$$

$$\Rightarrow \quad \ln\left(\frac{CE - q}{CE - q_0}\right) = \left(\frac{-t}{RC}\right)$$

$$(CE - q) = (CE - q_0)\ e^{-t/RC}$$

$$q = [CE - (CE - q_0)\ e^{-t/RC}] + q_0 - q_0$$

$$= q_0 + (CE - q_0)\ (1 - e^{-t/RC})]$$

$$\boxed{q\ (t) = q_0 + (CE - q_0)\ (1 - e^{-t/RC})}$$

In generalizsed for any capacitor, we have,

$$\boxed{q\ (t) = q_0 + (q_s - q_0)\ [1 - e^{-t/\tau})}$$

where,

$q_0 \equiv$ inital charge ; $q_s \equiv$ final steady state charge

$\tau \equiv$ time-constant = RC

Differentiating the above result, we get the result for current,

$$i\ (t) = \left(\frac{q_s - q_0}{\tau}\right) e^{-t/\tau} = i_0 e^{-t/\tau}$$

where $i_0 \equiv$ initial current

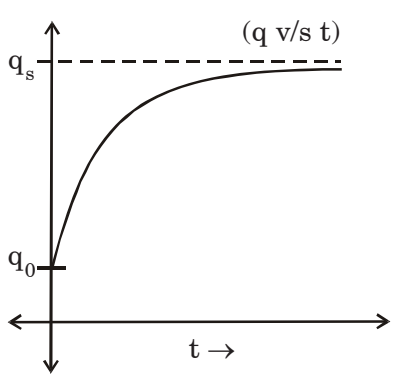

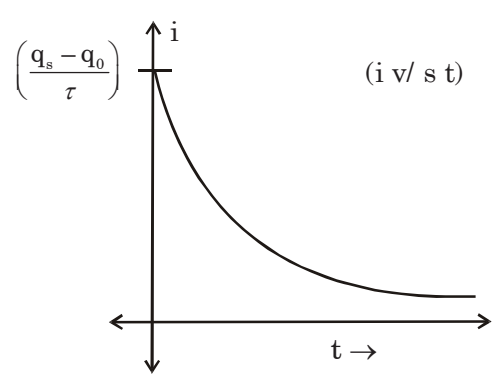

Time constant : The time in which a capacitor will get completely charged if it would have been charging with initial constant rate, is called time constant.

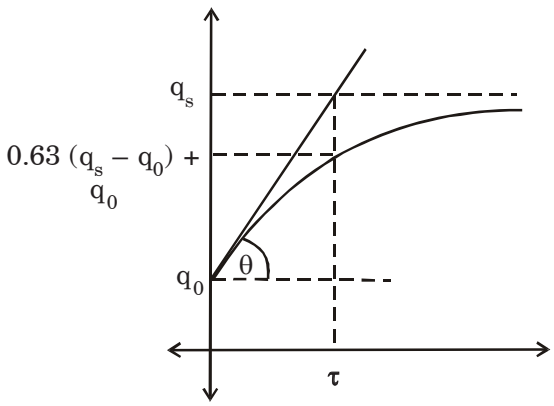

$$\tan\theta = \frac{(q_s - q_0)}{\tau}$$

Example 24

Which capacitors 1 or 2, has the time constant is greater, for which the charging curves are shown ?

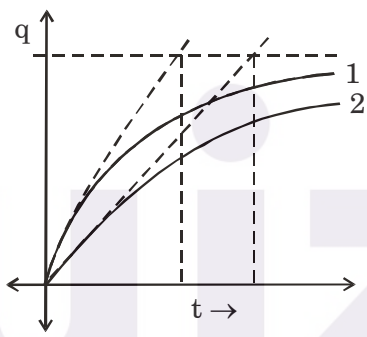

Solution. $\tan\theta = \left(\frac{q_s}{\tau}\right)$ {as $q_0 = 0$}

$$\tau \,\alpha\, \frac{1}{(\text{Slope})_{\text{at } t=0}}$$

Hence $(\tau_2 > \tau_1)$

10.2. Discharging of the Capacitors

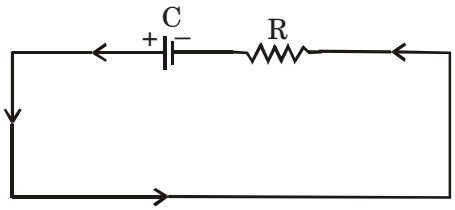

$$\left(\frac{q}{C}\right) - iR = 0$$

$$-\left(\frac{dq}{dt}\right)R = \left(\frac{q}{C}\right)$$

$$\Rightarrow \quad \int_{q_0}^{q(t)} \left(\frac{dq}{q}\right) = -\int_0^t \frac{dt}{RC}$$

$$\ell n\left(\frac{q(t)}{q_0}\right) = \left(\frac{-t}{RC}\right)$$

$$\Rightarrow \quad \boxed{q\ (t) = q_0 e^{-t/RC}}$$

$$\boxed{i(t) = \left(\frac{-q_0}{RC}\right) e^{-t/RC}}$$

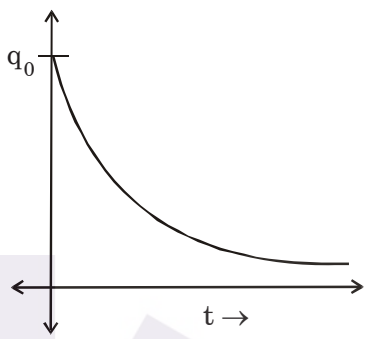

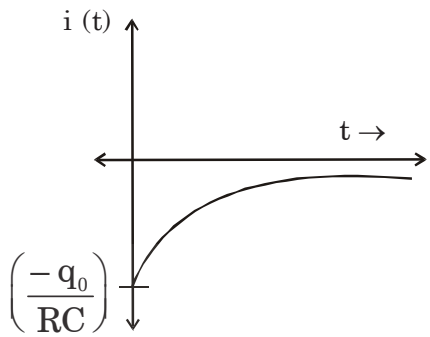

ANALYSIS OF RC CIRCUIT

I. At time t = 0.

Get the initial charge through the capacitor. And then find the initial current through the capacitor.

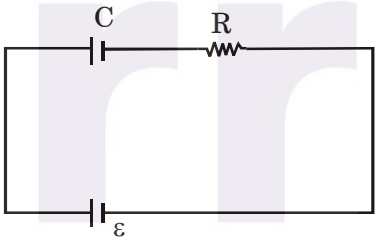

— The initial current can be found by short-circuiting the capacitor, only if the capacitor is initially uncharged.

— Otherwise, apply toop rule to get the current through the capacitor.

$$i_0 = \left(\frac{\varepsilon}{R}\right)$$

II. At time t = ∞ , (at steady state) :

* The current through the capacitor is zero.

* Remove the capacitor, inserting a gap between its terminals and then find the potential difference across its ends.

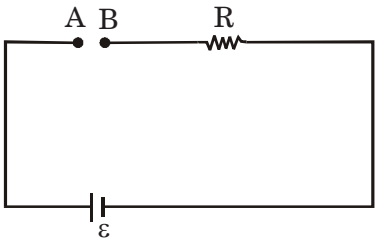

$$V_{AB} = \varepsilon$$

$$q_s = (C\varepsilon)$$

III. Now, use

$$\boxed{i_0 = \frac{q_s - q_0}{\tau}}$$

Among four unknown, three can be found using above concept and the fourth can be obtained, hence.

Note : You can also find the time-constant by finding the equivalent resistance between the terminals of the capacitor.

Remember : To find the time constant directly, short-circuit the battery and then find the equivalent resistance between the capacitor terminals.

Example 25

At time = t = 0, the switch S is closed. Find the function,

(i) q **(t) = ?**

(ii) i (t) **= ?**

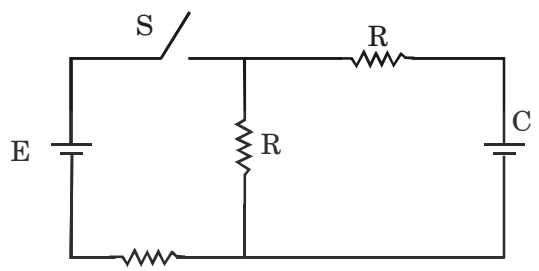

Solution. At t = 0, $q_0 = 0$

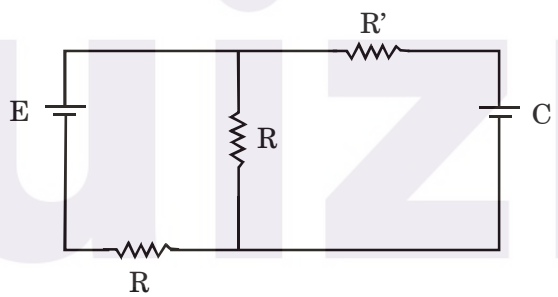

Let i_0 be the current through capacitor, and I be the current through battery.

Then,

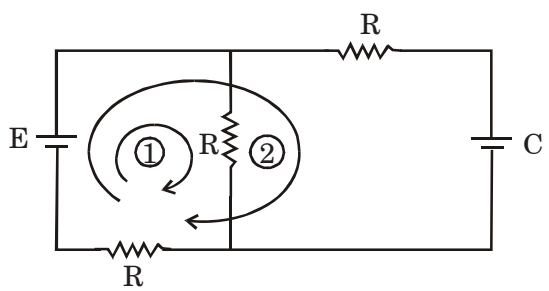

In loop (1), $E = IR + (I - i_0)R$

In loop (2), $E = IR + i_0R$

$$\begin{array}{c} - \quad - \quad - \\ \hline 0 = I - 2i_0 \\ I = 2i_0 \end{array}$$

Putting in (1)

$\Rightarrow$ $E = 2i_0R + i_0R \Rightarrow \boxed{i_0 = E/3R}$

At $t = \infty$

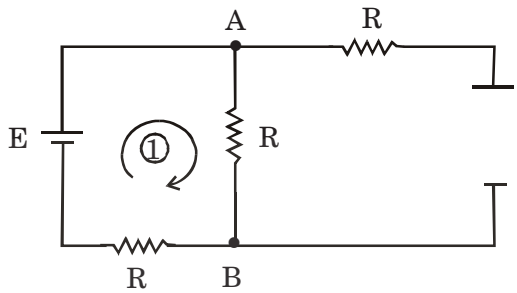

In loop (1)

$$E = 2iR \Rightarrow \boxed{iR = E/_2}$$

since potential across capacitor = potential across AB

Hence, $V_{capacitor} = E/2$

$\therefore$ $q_s = \dfrac{CE}{2}$

Hence, $\tau = \dfrac{q_s - q_0}{i} = \left(\dfrac{CE}{2}\right)\left(\dfrac{3R}{E}\right) = \dfrac{3RC}{2}$

$$q(t) = q_0 + (q_s - q_0)(1 - e^{-t/\tau})$$

$$q(t) = \frac{CE}{2}(1 - e^{-2t/3RC}) \quad \text{...(i)}$$

Now, differentiate it,

We get, $i(t) = \dfrac{\varepsilon}{3R}(e^{-2t/3RC})$ ...(ii)

Example 26

Find the function of q (t) and i (t) when the initial charge through the capacitor is zero.

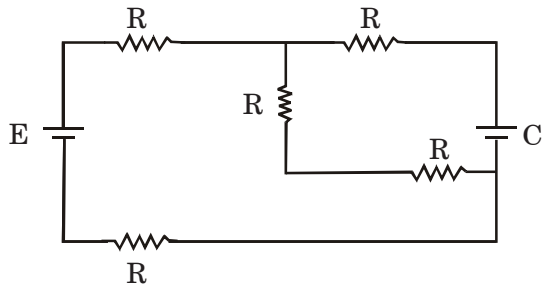

Solution : At $t = 0$

Short-circuit the capacitor

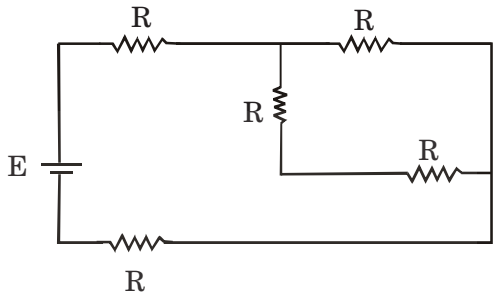

$$\therefore \quad R_{eq} = \left(\frac{8R}{3}\right)$$

$$\therefore \quad I = \left(\frac{3E}{8R}\right)$$

$$\therefore \quad i_0 = \left(\frac{3E}{8R}\right) \times \left(\frac{2}{3}\right) = \left(\frac{E}{4R}\right)$$

At $t = \infty$

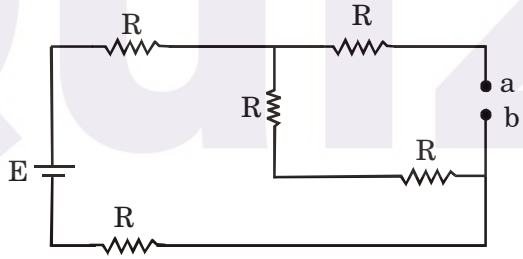

$$q_s = \left(\frac{CE}{2R}\right)$$

$$\therefore \quad \tau = \frac{(q_s - q_0)}{i_0} = \left(\frac{CE}{2R}\right)\left(\frac{4R}{E}\right) = (2RC)$$

Example 27

Find the potential drop across the 20Ω resistor connected through the capacitor after 1 ms. (Initially the capacitor is uncharged)

Solution. Find the time constant directly using the equivalent resistance concept.

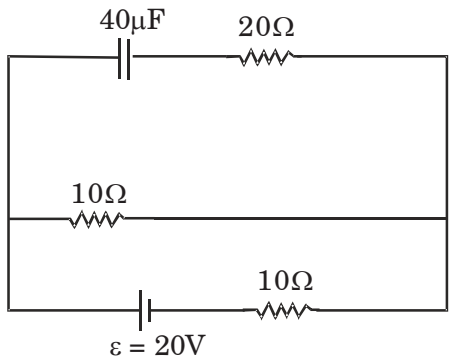

Equivalent resistance is calculated across the capacitor and shorting the battery.

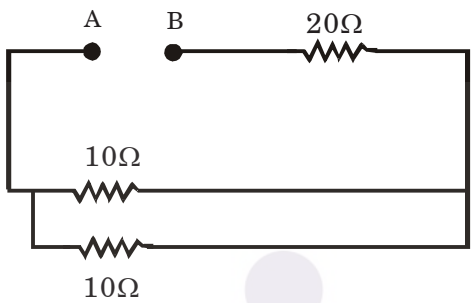

$\therefore$ Req = $20 + \frac{10}{2} = 25\Omega$

Hence, $\tau = R \times C = 25 \times 40 \times 10^{-6} = (10^{-3}) = 1$ ms.

$$q_0 = 0,\ q_s = (10)\ (40)$$
$$= (400\mu C)$$

$\therefore$ $$q\ (t) = q_0 + (q_s - q_0)\ (1 - e^{-t/\tau})$$
$$= 0 + 400\ (1 - e^{-t/1})\ \mu C \text{ (time in ms)}$$
$$q\ (t) = 400\ (1 - e^{-t})\ \mu C \text{ (time in ms)}$$

$\therefore$ $$i\ (t) = \frac{400}{10^{-3}}(e^{-t}) \times 10^{-6}\ A$$
$$= 0.4\ (e^{-t})\ A$$
$$i\ (t) = \left(\frac{0.4}{e^{t}}\right) A$$

$\therefore$ Potential drop after 1 ms

$$= 20 \times \frac{0.4}{e^{1}} = \left(\frac{8}{e}\right) V$$

New Concept : If no circuit element is connected in series with the cell, then we can split the branches of the circuit into different individual circuits.

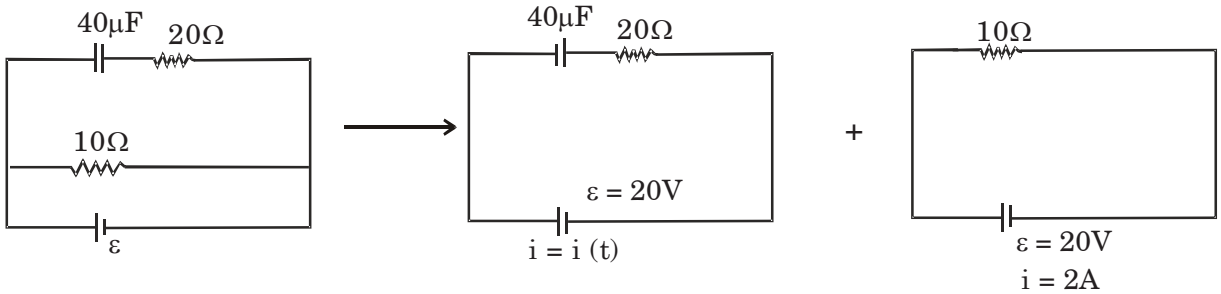

In the above diagram,

i (t) = current through the capacitor = $1e^{-t/\tau}$ where $\tau = 40 \times 20 \times 10^{-6} = (8 \times 10^{-4})$ s

But current through the battery = $2 + e^{-t/\tau}$

Example 28

In the arrangement shown, the switch S is closed at the time t = 0.

The capacitor has charges as shown

Find :

(i) **current through the cell as a function of time** t.

(ii) q (t) **on capacitor**

(iii) **charge flown from the battery**

(iv) **total heat dissipated in the circuit.**

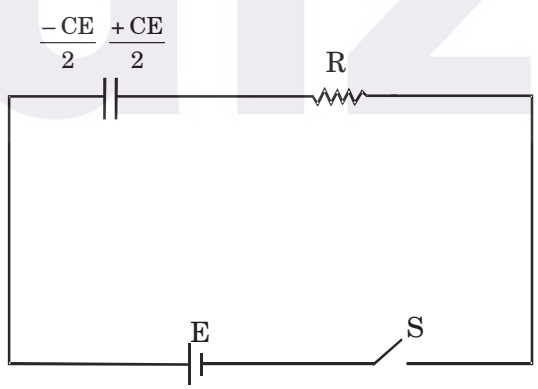

Solution. At, t **= 0**

Apply KVL as capacitor is charged

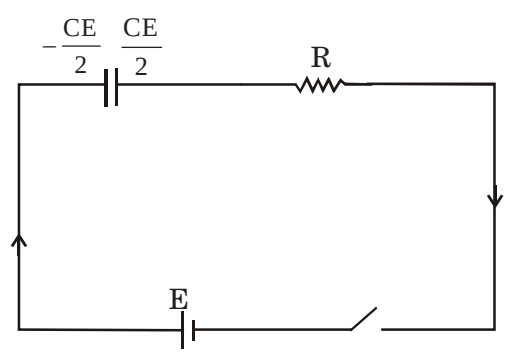

$$E + \left(\frac{E}{2}\right) - iR = 0$$

$$\therefore \qquad i_0 = \left(\frac{3E}{2R}\right), \; q_0 = -\left(\frac{CE}{2}\right)$$

At $t = \infty$

$$q_s = (CE)$$

$$\tau = (RC)$$

$$\therefore \quad q(t) = q_0 + (q_s - q_0)\ (1 - e^{-t/\tau})$$

$$= \left(\frac{-CE}{2}\right) + \left(\frac{3CE}{2}\right)\left[1 - e^{-t/RC}\right]$$

(i) $q(t) = CE - \frac{3CE}{2}e^{-t/RC} = \frac{CE}{2}[2 - 3e^{-t/RC}]$

(ii) $\therefore\ i(t) = \frac{3E}{2R}e^{-t/RC}$

(iii) Charge flown from the battery (after connection) to plate

$$= \Sigma(Q_f) - \Sigma(Q_i) = CE - \left[-\frac{CE}{2}\right] = \left(\frac{3CE}{2}\right)$$

(iv) Heat dissipated in the circuit.

$$\Delta W_{ex} + \Delta W_b = \Delta U + \Delta H$$

$$0 + \left(\frac{3CE}{2}\right)E = \frac{1}{2}C\left[E^2 - \frac{E^2}{4}\right] + \Delta H$$

$$\Delta H = \frac{3CE^2}{2} - \frac{3CE^2}{8} = \left(\frac{9CE^2}{8}\right)$$

Example 29

In the circuit shown, initially S_2 is closed till the capacitor is completely charged to q_0. Now, S_2 is opened and S_1 is closed till the charge on the capacitor became $\left(\frac{q_0}{2}\right)$ in time t_1. Now S_1 is opened and S_2 is closed till the charge on the capacitor becomes $\left(\frac{3q_0}{4}\right)$ in time t. Find the ratio (t_1/t_2).

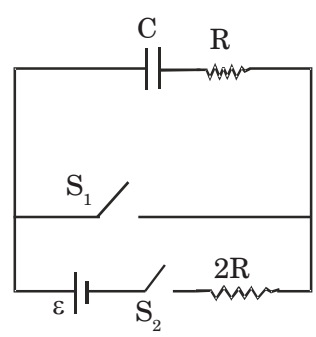

Solution. When the capacitor is completely charged

$$q_0 = CE$$

(i) When S_2 is opened and S_1 is closed :

$$q\ (t) = q_0\ e^{(-t/RC)} \text{ (discharging circuit)}$$

$$\therefore \quad \left(\frac{q_0}{2}\right) = q_0 e^{(t_1/RC)}$$

$$\therefore \quad t_1 = (RC \quad \ln 2$$

(ii) When S_1 opened and S_2 is Closed :

$$q(t) = \frac{(q_0)}{2} + \left(q_0 - \frac{q_0}{2}\right)(1 - e^{-t/3RC})$$

$$q(t) = \left(\frac{q_0}{2}\right) + \left(\frac{q_0}{2}\right) - \left(\frac{q_0}{2}\right) e^{-t/3RC}$$

$$\left(\frac{3q_0}{4}\right) = (q_0) - \left(\frac{q_0}{2}\right) e^{-t_2/3RC}$$

$$\therefore \quad \left(\frac{q_0}{4}\right) = \left(\frac{q_0}{2}\right) e^{-t_2/3RC}$$

$$\therefore \quad \ln 2 = \left(\frac{t_2}{3RC}\right) \quad \therefore\ t_2 = 3RC \ln 2$$

$$\boxed{\left(\frac{t_1}{t_2}\right) = \left(\frac{1}{3}\right)}$$

Example 30

Find the current through the battery just after closing the switch and after longtime. Also, find the charge on each capacitor and the total heat dissipated after the steady state is reached.

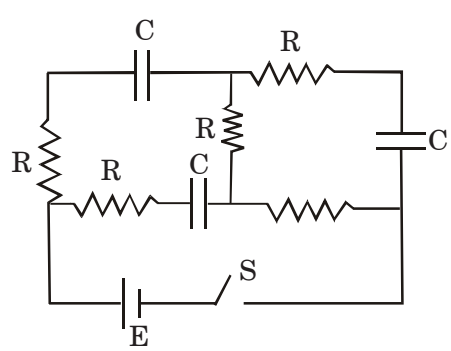

Solution. At t = 0

The short circuit capacitor circuit.

This is a balanced wheatstone bridge network

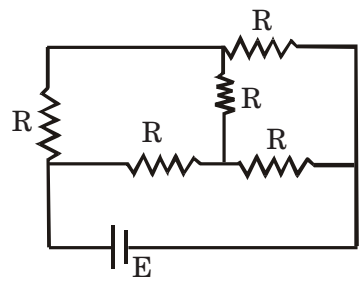

$\therefore \qquad i = \left(\frac{E}{R}\right)$

At $t = \infty$

Short circuit the resistor in which there is no current

$$q_c = 0,\ q_A = q_B = (CE)$$

$i_\infty = 0$ (through the battery)

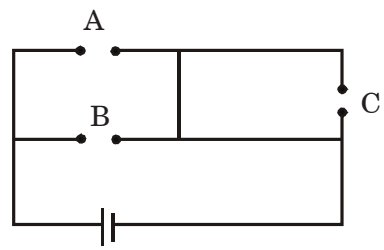

Net charge flown from the battery = (2CE – 0) = 2 CE

$\therefore$ Heat dissipated,

$$\Delta W_{ex} + \Delta W_b = \Delta V + \Delta H$$

$$O + 2CE^2 = \left(\frac{1}{2}CE^2\right) \times 2 + \Delta H$$

$$\therefore \qquad \Delta H = CE^2$$

Example 31

In the circuit shown initially S_1 and S_2 are both closed. When the steady state is reached the key S_1 is opened (at t = 0).

Then find the charge flown through the battery and heat dissipated till the steady state is again reached after opening S_1.

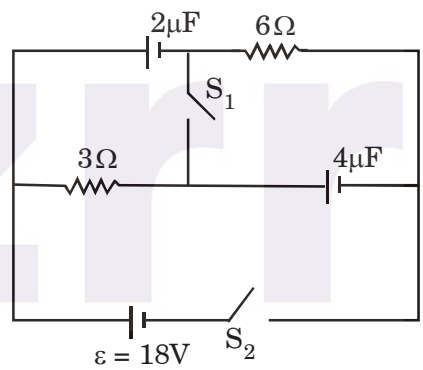

Solution. At t = 0, charge distribution was,

Current (i) in the circuit = $\frac{18}{9} = 2A$

$\therefore \qquad \Delta V_A = 6V \qquad \Delta V_B = 12V$

$\therefore \qquad q_A = 12\mu C \qquad q_B = 48\mu C$

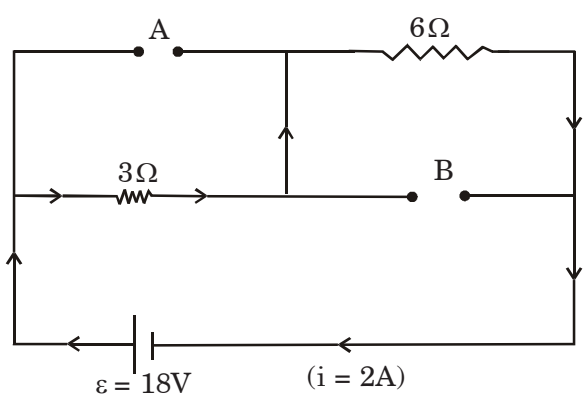

After S_1 is opened at t = 0 and the steady state is reached once again with S_2 closed.

$$q_A = 36\mu C \qquad \left[\because E = 18V = \frac{q}{C}\right]$$

$$q_B = 72\mu C$$

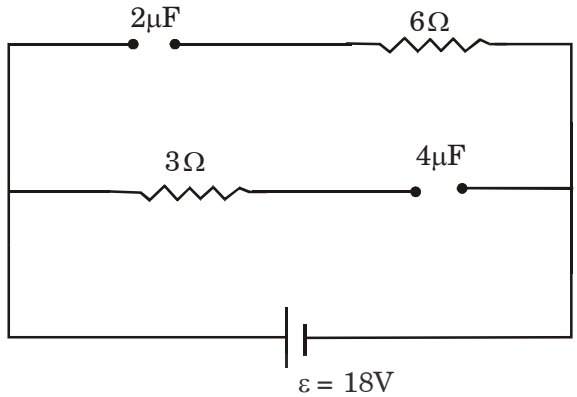

∴ Charge flow from the battery

= [(36 + 72) – (12 + 48)] μC = 48 μC.

∴ Heat dissipated

$$\Delta W_{ex} + W_b = \Delta H + \Delta U$$

$$0 + (48 \times 18 \times 10^{-6}) = \frac{1}{2}\left[\left(\frac{36^2}{3}+\frac{72^2}{4}\right)-\left(\frac{12^2}{2}+\frac{48^2}{4}\right)\right]\times 10^{-6} + \Delta H$$

$$\Rightarrow \quad \boxed{\Delta H = 216 \times 10^{-6} J}$$

11. HEAT DISSIPATED THROUGH EACH RESISTOR IN RC CIRCUIT

(A) Series Combination :

$$\boxed{\frac{H_1}{R_1} = \frac{H_2}{R_2} = \frac{H_3}{R_3} = \frac{H_n}{R_n} = \frac{H_{Total}}{Req}}$$

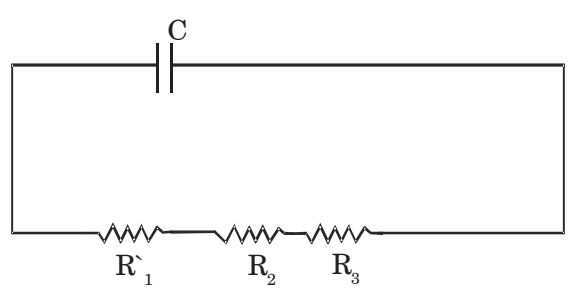

Derivation :

$$H_1 = \int_0^\infty R_1 i^2 dt = R_1 \int_0^\infty i^2 dt$$

$$H_2 = \int_0^\infty R_2 i^2 dt \text{ and so on}$$

But, $H_{total} = \int_0^\infty i^2 R_{eq}\, dt = Req \int_0^\infty i^2 dt$

The factor $\int_0^\infty i^2 dt$ is constant

$\therefore \quad \int_0^\infty i^2 dt = \frac{H_1}{R_1} = \frac{H_2}{H_2} = \frac{H_3}{R_3} = \frac{H_{Total}}{R_{eq}}$

$\therefore \quad H_i = R_i \left(\frac{H_{Total}}{R_{eq}} \right)$

(B) Parallel Combination

$$\boxed{H_1R_1 = H_2R_2 = H_3R_3 = \ldots\ldots H_nR_n = H_TR_{eq}}$$

Derivation :

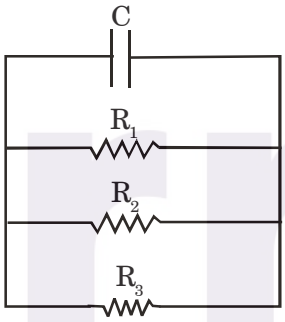

$H_1 = \int_0^\infty \frac{V^2}{R_1} dt = \frac{1}{R_1} \int_0^\infty V^2 dt$

$H_2 = \frac{1}{R_2} \int_0^\infty V^2 dt$ and so on.

$\therefore \quad = \int_0^\infty V^2 dt = K = (H_1R_1) = (H_T R_{eq})$

$= \ldots\ldots = (H_2R_{eq})$

$\therefore \quad \boxed{H_1 = \frac{H_TR_{eq}}{R_1}}$

Example 32

A capacitor of 2μF is allowed to be discharged through resistors of $R_1 = 3\Omega$ and $R_2 = 2\Omega$ after being charged to a potential of 10V. Calculate the heat dissipated through each if connected.

Sol. (a) **In series**

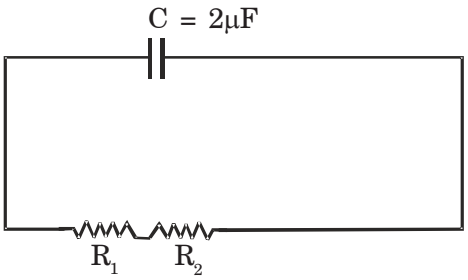

$$\therefore \quad \Delta H_T = \frac{1}{2}CV^2$$

$$= \frac{1}{2} \times 2 \times (100) = 100\mu J$$

$$\therefore \quad \left(\frac{H_1}{R_1}\right) = \left(\frac{H_2}{R_2}\right) = \left(\frac{H_T}{Req}\right) = \left(\frac{100}{5}\right)$$

$$\therefore \quad H_1 = R_1 \times \left(\frac{100}{5}\right) = \frac{3 \times 100}{5} = 60\mu J$$

$$H_2 = (40\mu J)$$

(b) **in parallel**

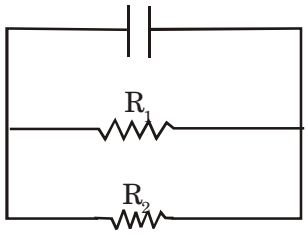

$$\Delta H_T =$$

$$= \frac{1}{2} \times CV^2$$

$$= 100\ \mu J$$

$$H_1R_1 = H_2R_2 = H_T\ Req$$

$$H_1 = \left(\frac{H_T Req}{R_1}\right)$$

$$= \frac{100 \times 6}{3 \times 5} = 40\mu J$$

$$H_2 = 60\mu J$$

12. ELECTRICAL MEASURING INSTRUMENTS

So far we have studied about current, resistance, potential difference and emf. Now we will study how these are measured. The basic measuring instrument is galvanometer, whose pointer shows a deflection when current passes through it. A **galvanometer** can easily be converted into an ammeter for measuring current, into a voltmeter for measuring potential difference. For accurate measurement of potential difference or emf a **potentiometer** is more preferred. Resistances are accurately measured by using post office box or meter bridge which are based on the principle of 'Wheatstone bridge."

12.1 Galvanometer

Many common devices including car instrument panels, battery chargers measure potential difference, current or resistance using d' Arsonval Galvanometer. It consists of a provided coil placed in the magnetic field of a permanent magnet. Attached to the coil is a spring. In the equilibrium position, with no current in the coil, the pointer is at zero and spring is relaxed. When there is a current in the coil, the magnetic field exerts a torque on the coil that is proportional to current. As the coil turns, the spring exerts a restoring torque that is proportional to the angular displacement. Thus, the angular deflection of the coil and pointer is directly proportional to the coil current and the device can be calibrated to measure current.

The maximum deflection, typically 90 to 120 is called full scale deflection. The essential electrical characteristics of the galvanometer are the current i_g required for full scale deflection (of the order of 10μA to 10mA) and the resistance G of the coil (of the order of 10 to 1000Ω).

The galvanometer deflection is proportional to the current in the coil. If the coil obeys Ohm's law, the current is proportional to potential difference. The corresponding potential difference for full scale deflection is,

$$\boxed{V = i_g G}$$

12.2 Ammeter

It is a device used to measure the current through a circuit element and connected in series with that element.

Actural Current $= \left(\frac{E}{R}\right)$

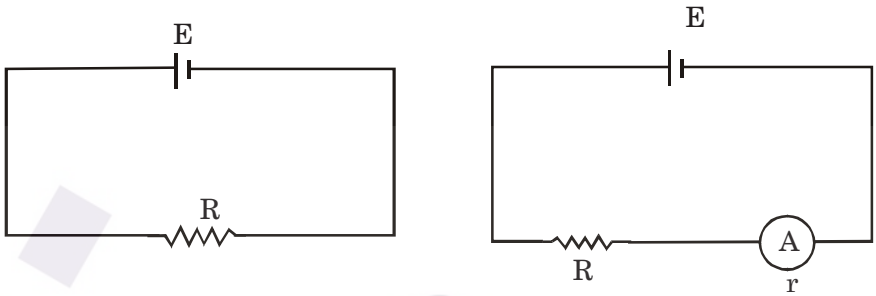

$i^1 = \frac{\varepsilon}{(R+r)}$

{Measured current}

Now, $I = \left(\frac{\varepsilon}{R}\right)$, $I' = \frac{\left(\frac{\varepsilon}{R}\right)}{1+\left(\frac{r}{R}\right)}$

$\therefore$ $$\boxed{I' = \frac{I}{1+(r/R)}}$$

Few important points to note :

(1) The reading of an ammeter is always less than the actual current in the circuit elements.

(2) Smaller the resistance of the ammeter, more accurate is the reading obtained.

(3) An ideal ammeter has zero resistance.

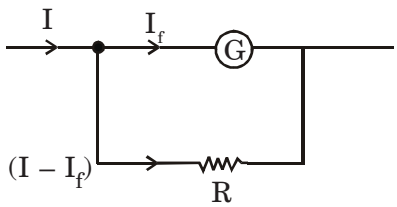

(4) To convert a galvanometer into an ammeter, a small value resistance called shunt is connected in parallel across the galvanometer.

To convert a galvanometer into an ammeter which can measure a current I,

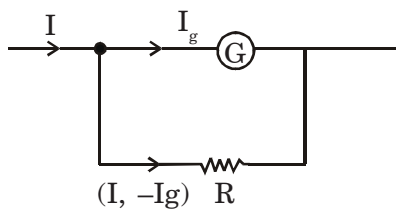

I_g ≡ full scale deflection current

I ≡ required current range.

$$(I - I_g)\,R = (I_g G)$$

$$\boxed{R = \frac{I_g G}{I - I_g}}$$

where R is the internal resistance.

12.3 Voltmeter

It is a device which can measure the potential difference across a circuit element and connected in parallel with that element.

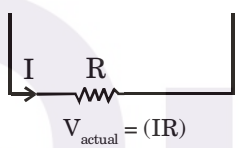

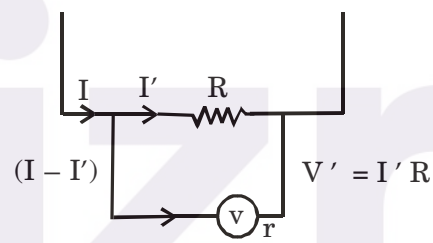

$$V_{observed} = (I'R)$$

$$\therefore \quad (I - I')r = (I'R)$$

$$Ir = I'(r + R)$$

$$\boxed{I' = \frac{Ir}{(r+R)} = \frac{I}{(1 + R/r)}} \quad (V' < V)$$

As $r \to \infty$, $(I' \to I)$

Few important points to note :

(1) The reading of the voltmeter is always less than the actual value.

(2) Greater the resistance of the voltmeter, more accurate is the reading obtained.

(3) For an ideal voltmeter, resistance should be infinite, which has been realized in practice through a potentiometer.

To convert a galvanometer into voltmer of given range V :

We connect a high value resistance R is series with the galvanometer.

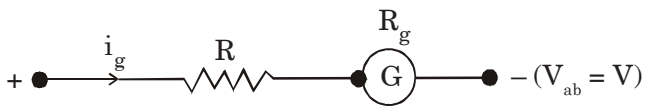

$$i_g R + R_g i_g = V$$

$$\boxed{R = \frac{V}{i_g} - R_g}$$

Illustration

A galvanometer of R_g = 30Ω and i_g = 2mA is to be converted into an ammeter of 0.3A range and a voltmeter of 0.2V range. Find the resistance required in each case.

Solution. To convert into an ammeter,

$$S = \frac{i_g R_g}{(I - i_g)} = \frac{2\times10^{-3}\times30}{(0.3)-(2\times10^{-3})} \cong \frac{2\times10^{-3}\times30\times10}{3}\times10 = 0.2\Omega$$

To convert into a voltmeter

$$R = \frac{V}{I_g} - R_g = \frac{0.2}{2\times10^{-3}} - 30 = (70\Omega)$$

Example 33

A cell of emf 3.4V and internal resistance r = 3Ω is connected in series with an ammeter of resistance 2Ω and an external resistance of 100Ω when a voltmeter is connected is parallel, ammetter reading is 0.04 A.

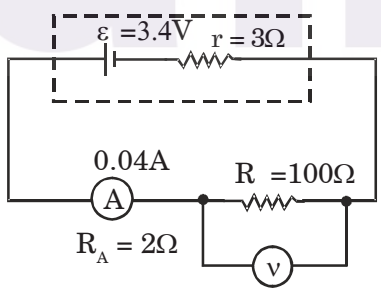

Find the reading of the voltmeter and its resistance.

Also, find the reading when the voltmeter is ideal.

Solution. Use KVL,

$$0.04\ (3 + 2) + V_R = 3.4$$

$$\therefore \quad V_R = 3.2\ V$$

$$\therefore \quad Req. = \left(\frac{V_R}{I}\right) = \left(\frac{3.2}{0.04}\right) = 80\Omega$$

Now, $$\frac{100R_V}{(100+R_V)} = 80 \Rightarrow R_V = 400\Omega$$

$\therefore$ Resistance of volmeter = 400Ω

and its reading is 3.2 V.

When the voltmeter is ideal,

$$i = \frac{3.4\times100}{(3+2+100)} = \frac{3.4\times100}{105} = \left(\frac{68}{21}\right)$$

$\therefore$ $$\boxed{V_R = \left(\frac{68}{21}\right)\times100}$$

Example 34

To convert into voltmeter

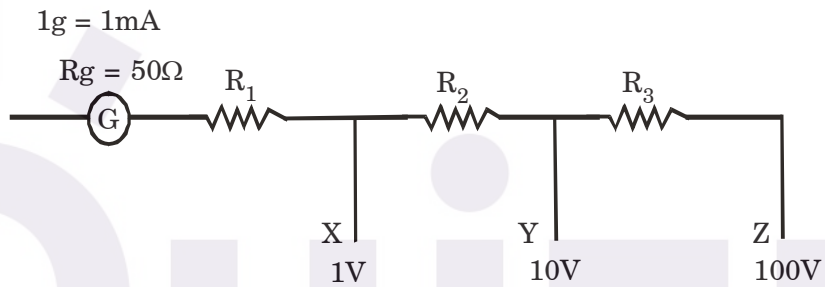

Solution. Through X : $R_1 = \left(\frac{V_1}{i_g} - R_g\right) = \frac{1}{10^{-3}} - 50 = (950)\Omega$

Through Y : $(R_1 + R_2) = \left(\frac{V_2}{i_g} - Rg\right) = \frac{10}{1\times10^{-3}} - 50 = 9950\Omega$ $\therefore$ $R_2 = 9000\Omega$

Through Z : $(R_1 + R_2 + R_3) = \left(\frac{V_3}{i_g} - R_g\right) = (10^5 - 50) = 999950\Omega$

$R_3 = 90000\Omega$

12.4 POTENTIOMETER

The potentiometer is an instrument that can be used to measure the emf or the internal resistance of an unknown source. It also has a number of other useful applications.

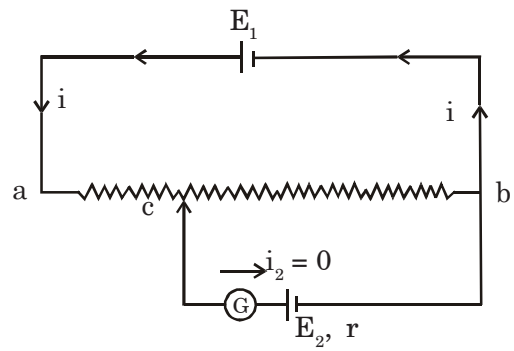

Principle of Potentiometer

The principle of potentiometer is schematically shown in figure. A resistance wire ab of total resistance R_{ab} is permanently connected to the terminals of a source of known emf E_1. A sliding contact c is connected through the galvanometer G to a second source whose emf E_2 is to be measured. As contact c is moved along the potentiometer wire, the resistance R_{cb} between points c and b varies. If the resistance wire is uniform R_{cb} is proportional to the length of the wire between c and b. To determine the value of E_2, contact c is moved until a position is found at which the galvanometer shows no deflection. This corresponds to zero current passing through E_2. With $i_2 = 0$, Kirchhoff's second law gives,

$$\boxed{E_2 = iR_{cb}}$$

With $i_2 = 0$, the current i produced by the emf E_1 has the same value no matter what the value of emf E_2. A potentiometer has following applications.

To find emf of an unknown battery

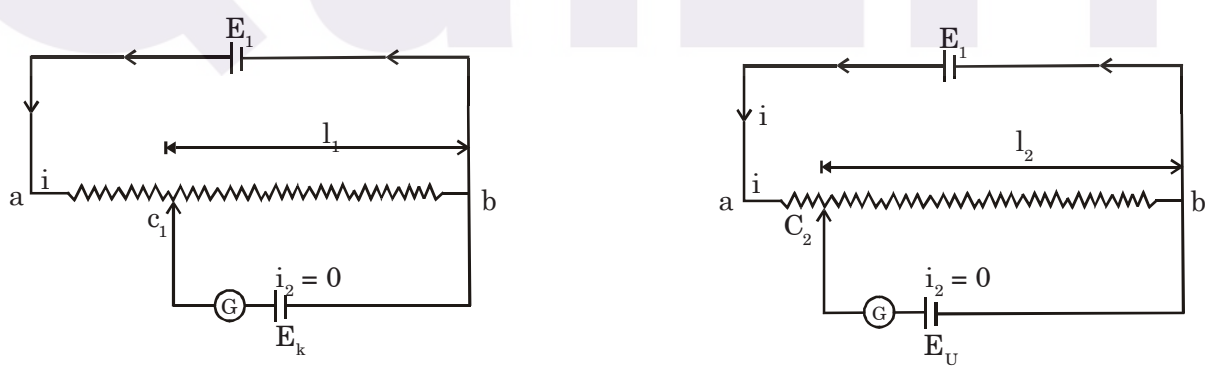

We calibrate the device by replacing E_2 by a source of known emf E_K and then by unknown emf E_U. Let the null points are obtained at lengths l_1 and l_2. Then,

$$E_K = i\ (\rho l_1)$$

and

$$E_U = i\ (\rho l_2)$$

Here, ρ = resistance of wire ab per unit length.

$$\therefore \qquad \frac{E_K}{E_U} = \frac{l_2}{l_2}$$

or

$$\boxed{E_U = \left(\frac{l_2}{l_1}\right) E_K}$$

So, by measuring the lengths l_1 and l_2, we can find the emf of an unknown battery.

To find the internal resistance of an unknown battery

To find the internal resistance of an unknown battery let us derive a formula.

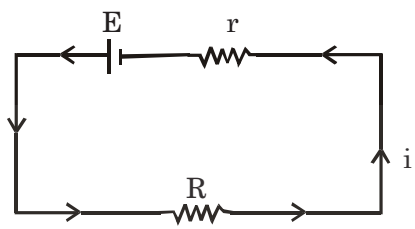

In the circuit shown in figure

$$i = \frac{E}{R + r} \qquad ...(i)$$

and V = potential difference across the terminals of the battery

$$V = E - ir = iR \quad ...(ii)$$

From equations (i) and (ii), we can prove that

$$\boxed{r = R\left(\frac{E}{V} - 1\right)}$$

Thus, if a battery of emf E and internal resistance r is connected across a resistance R and the potential difference across its terminals comes out to be V then the internal resistance of the battery is given by the above formula. Now let us apply it in a potentiometer for finding the internal resistance of the unknown battery.

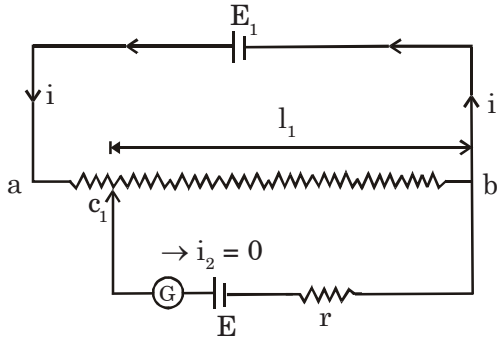

The circuit shown in Fig. is similar to the previous one.

Hence $E = i\rho l_1$ ...(i)

Now a known resistance R is connected across the terminals of the unknown battery as shown in Fig. below

This time $V_{cb} \neq E$,

but $V_{cb} = V$

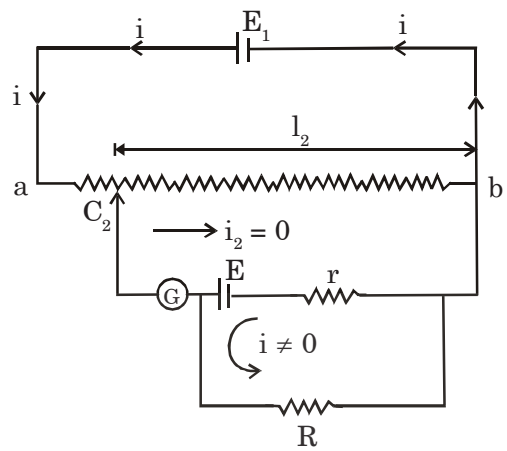

where V = potential difference across the terminals of the unknown battery. Hence,

$V = i\rho l_2$ ...(ii)

From Eqs. (i) (ii),

$$\frac{E}{V} = \frac{l_1}{l_2}$$

Substituting in $r = R\left(\frac{E}{V} - 1\right)$, we get

$$\boxed{r = R\left(\frac{l_1}{l_2} - 1\right)}$$

So, by putting R, l_1 and l_2 we can determine the internal resistance r of unknown battery.

Example 35

A potentiometer wire of length 100 cm has a resistance of 10 ohm. It is connected in series with a resistance and a cell of emf 2 volts and of negligible internal resistance. A source of emf 10mV is balanced against a length of 40 cm of the potentiometer wire. What is the value of external resistance ?

Solution. From the theory of potentiometer,

$V_{ab} = E$, if no current is drawn from the battery

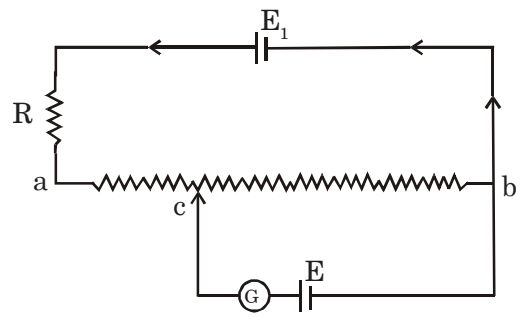

or $$\left(\frac{E_1}{R + R_{ab}}\right)R_{ab} = E$$

Here, $$E_1 = 2V,\ R_{ab} = 10\Omega$$

$$R_{cb} = \left(\frac{40}{100}\right)\times 10 = 4\Omega$$

and $$E = 10 \times 10^{-3}\ V$$

Substituting in above, we get

$$R = 790\Omega$$ **Ans.**

PRINCIPLE OF WHEATSTONE'S BRIDGE

This is an arrangement of four resistances which can be used to measure one of them in terms of the rest.

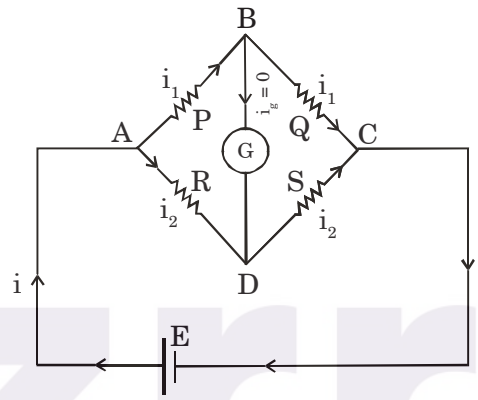

The figure shows the circuit designed by him. The bridge is said to be balanced when deflection in galvanometer is zero, i.e. $i_g = 0$, and hence,

$$V_B = V_D$$

Under this condition, $$V_A - V_B = V_A - V_D$$

or $$i_1P = i_2R$$

or $$\frac{i_1}{i_2} = \frac{R}{P} \quad ...(i)$$

Similarly, $$V_B - V_C = V_D - V_C$$

or $$i_1Q = i_2S$$

or $$\frac{i_1}{i_2} = \frac{S}{Q}$$

From Eqs. (i) and (ii), $$\frac{R}{P} = \frac{S}{Q}$$

$$\boxed{\frac{P}{Q} = \frac{R}{S}}$$

So, this is a condition for which a Wheatstone bridge is balanced.

Following two points are important regarding a Wheastone's bridge.

(i) Wheastone bridge, cell and galvanometer arms are interchangeable.

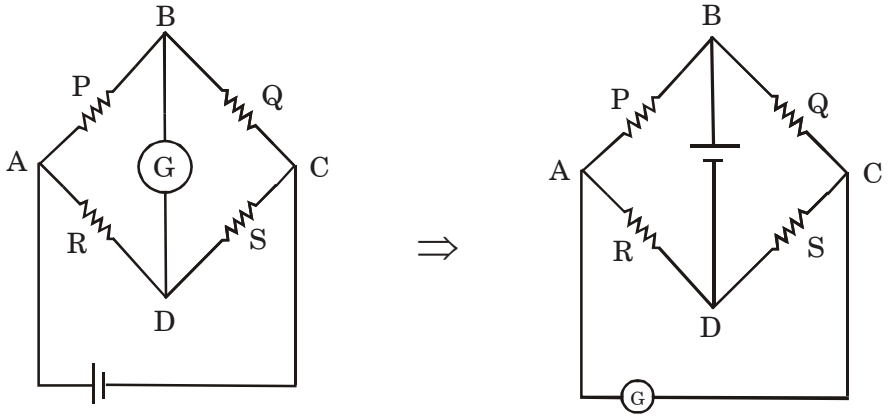

In both the cases, condition of balanced bridge is

$$\frac{P}{Q} = \frac{R}{S}$$

(ii) If bridge is not balanced current will flow from D to B if,

$$PS > RQ$$

DIFFERENT FORMS OF WHEATSTONE'S BRIDGE

Following are given few circuits which are basically Wheatstone's bridge circuits.

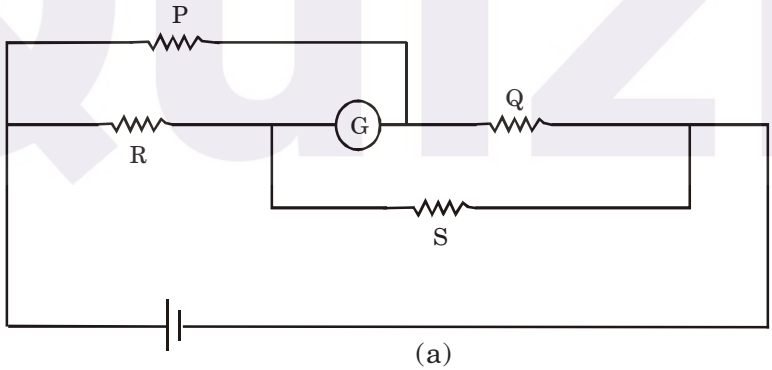

(a)

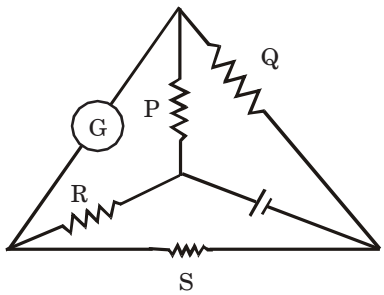

(b)

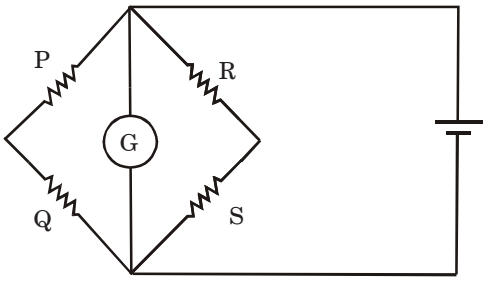

(c)

Most simple practical application of this bridge is the meter bridge.

It consists of a straight and uniform wire of manganin or constantan stretched along a meter scale. The balance is obtained on the wire, if lengths of two parts are l_1 and l_2 then the ratio of two resistances

$$\frac{P}{Q} = \frac{l_1}{l_2}$$

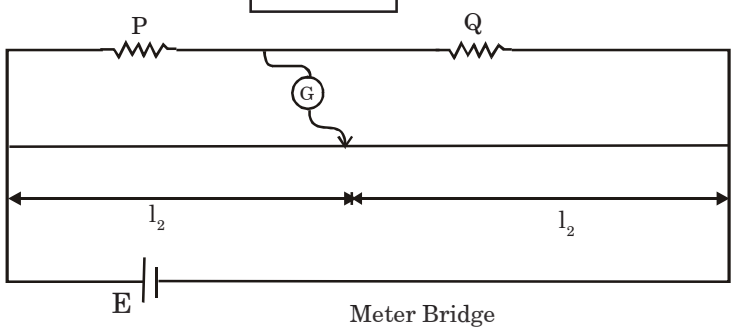

Meter Bridge

Example 36

A potentiometer wire of length l = 100 cm, R = 10Ω is connected in series with a cell of emf ε = 2V, and an external resistance R. A source of 10 mV is balanced against 40 cm length of potentiometer wire. Find the external resistance R and the maximum potential that can be measured with the potentiometer.

Solution. $i = \frac{2}{(10+R)}$

Resistance of 40 cm of wire = $10 \times \frac{40}{100} = 4\Omega$

Now, $i\,(4) = 10$ mV

$$\frac{2 \times 4}{(10+R)} = 10 \times 10^{-3}$$

$\Rightarrow$ $800 = 10 + R$

$\therefore$ $R = 790$

$$i = \frac{2}{800} = 0.25 \times 10^{-2} = 2.5 \times 10^{-3}\,A$$

$\therefore$ Maximum drop that can be measured = $2.5 \times 10^{-3} \times 10$

= 0.025 V

= 25 mV.

Example 37

A potentiometer wire AB is 100 cm long. When AC = 40 cm, no deflection occurs in galvanometer. Find R.

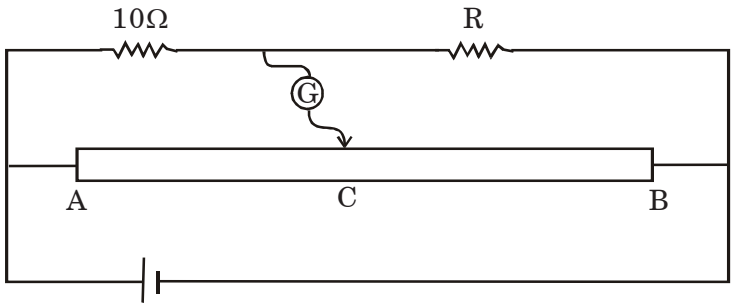

Solution :

$$\frac{10}{R} = \frac{AC}{CB}$$

$$\therefore \quad R = 10\left(\frac{CB}{AC}\right) = 10\left(\frac{100-40}{40}\right)$$

$$= 10 \times \frac{60}{40} = 15\Omega$$

Example 38

In the arrangement of the potentiometer shown, the first balanced point is achieved at 75 cm from one end A when the key K is opened. After closing the key K, the second balanced point is achieved at 60 cm from the end A. Find the internal resistance of the cell and the length of the potentiometer wire AB.

Solution. (a) When the key is opened

$$\text{Drop } V_1 = \varepsilon = 1.5 \text{ V}$$

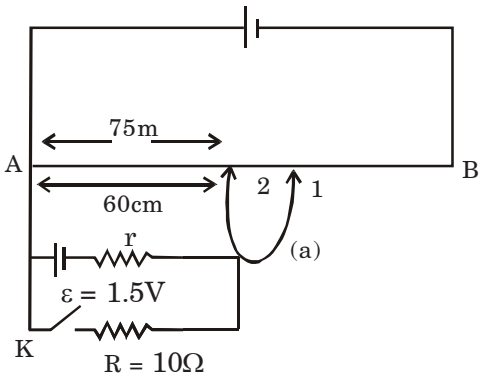

(b) When the key is closed

$$\text{Drop } V_2 = (\varepsilon - ir)$$

$$= \varepsilon - \left(\frac{\varepsilon}{R+r}\right) r$$

Now, use the principle of potentiometer

$$\left(\frac{\varepsilon}{75}\right) = \frac{\varepsilon - \left(\frac{\varepsilon r}{R+r}\right)}{60}$$

$$\Rightarrow \quad 4\varepsilon = 5\varepsilon - \left(\frac{5r\varepsilon}{R+r}\right)$$

$$\left(\frac{5r}{R+r}\right) = 1 \Rightarrow 4r = R$$

$$\Rightarrow \qquad r = \left(\frac{10}{4}\right) = 2.5\Omega$$

To calculate the length of potentiometer,

$$\frac{\varepsilon_0}{l_0} = \frac{\varepsilon}{l}$$

$$\Rightarrow \qquad \frac{2}{\ell_0} = \frac{1.5}{(75)}$$

$$l_0 = \frac{75}{1.5} \times 2 \text{ cm} = 100 \text{ cm}$$

Example 39

A uniform conducting wire of length AB = 100 cm is connected with an unknown resistance x and a known resistance RΩ by a thick metallic strip.

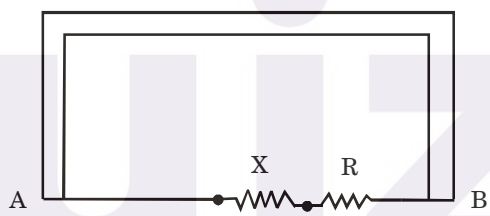

Now, a battery and a galvanometer with a sliding jockey is given. Make appropriate connection to find the resistance X if the balance point is achieved at a point 60 cm from the end A.

Solution. To convert the given arrangement, think the balanced wheastone bridge, with connections made as shown.

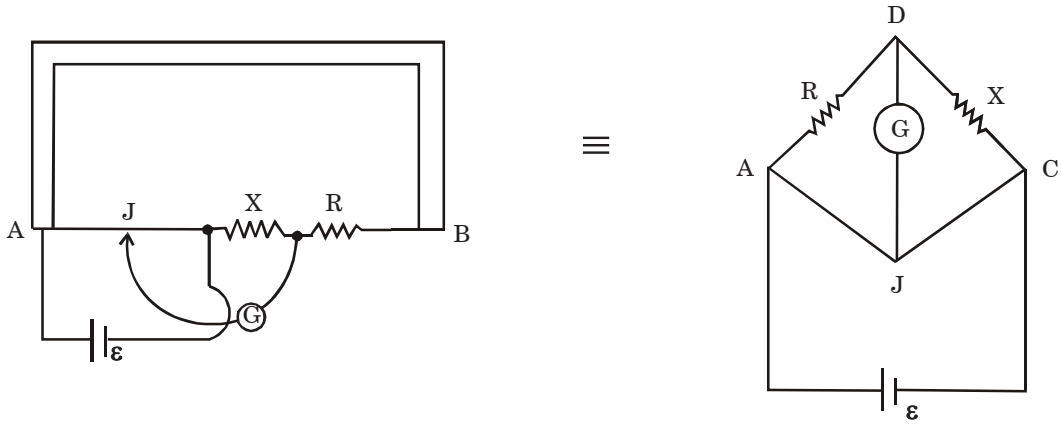

Using, the balanced network principle

$$\left(\frac{R}{X}\right) = \left(\frac{AJ}{JC}\right) = \left(\frac{60}{40}\right)$$

$$\Rightarrow \qquad X = \frac{4}{6} \times R = \frac{4}{6} \times 12 = 8\Omega$$

LEAKAGE CURRENT

Leakage current is the current flowing through the di-electric placed between the walls of the capacitor.

$$\vec{j} = \sigma\vec{E}$$

$$j = \left(\frac{\sigma q}{K \in_0 S}\right)$$

$$i = \int \vec{j}.d\vec{s} = \left(\frac{\sigma q}{K \in_0}\right)\int \frac{ds}{s} = \left(\frac{\sigma q}{K \in_0}\right)$$

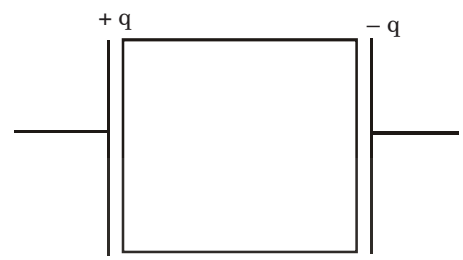

(dictector)

$$\boxed{i = \left(\frac{-dq}{dt}\right) = \frac{q}{\rho K \in_0}}$$

$$\int_{q_0}^{q(t)} \frac{dq}{q} = \frac{-1}{\rho K \in_0}\int_0^t dt$$

$$\boxed{q\ (t) = q_0 e^{-t/\rho \in_0}}$$

Discharging through leakage current

For this circuit, $\boxed{\tau = \rho K \in_0}$

This, leakage current can be compared with a dischariging circuit whose

$$\tau = (\rho K \in_0) \left[= (RC) = \frac{\rho d}{s}\left(\frac{K \in_0 S}{d}\right) = \rho K \in_0\right]$$

Potential drop at any time = $\left(\frac{q}{c}\right)$

Example 40

The gap between the plates of a parallel plate capacitor is filled with a dielectric of restivity ρ and dielectric constant K. It is connected with a battery of emf V. Then find the current (leakage) through the capacitor.

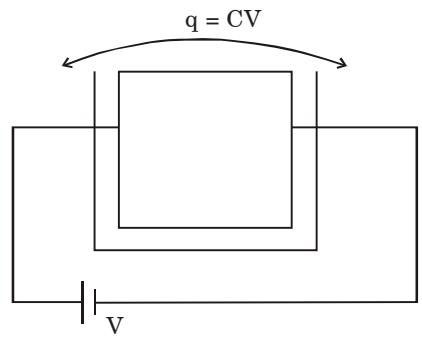

Solution. The charge on the capacitor is constant, hence the leakage current is of constant magnitude

$$i = \left(\frac{q}{P k \varepsilon_0}\right) = \frac{CV}{(\rho k_0 \varepsilon_0)}$$

Example 41

The gap between the electrodes of a spherical capacitor is filled with a dielectric of dielectric constant K and charged to a potential drop of V_0. Now it is found that the potential drop across the capacitor decreases to n times is the time to. Then, find the resistivity of the dielectric.

Solution. $V = V_0 e^{-t/\tau}$ $\quad \because \left(V = \frac{q}{C}\right)$

$\Rightarrow$ $\left(\frac{V}{\eta}\right) = Ve^{-t/\tau}$ $\quad \ln \eta = \frac{t_0}{\tau}$

and $\tau = \left(\frac{t_0}{\ln n}\right)$

$$\rho_{K\epsilon_0} = \left(\frac{t_0}{\ln n}\right)$$

$\Rightarrow$ $\rho = \frac{t_0}{K \epsilon_0 \ln \eta}$

Example 42

Two resistors with temperature coefficients of resistance α_1 and α_2 have resistances R_{01} and R_{02} at 0 C. Find the temperature coefficient of the compound resistor consisting of the two resistors connected.

(a) **in series,** (b) **in parallel.**

Solution. In series :

At	0 C	R_{01}	R_{02}	$R_0 = R_{01} + R_{02}$
At	t C	$R_{01}(1 + \alpha_1 t)$	$R_{02}(1 + \alpha_2 t)$	$R_0(1 + \alpha t)$

$$R_{01}(1+\alpha_1 t) + R_{02}(1+\alpha_2 t) = R_0(1+\alpha t)$$

or $$R_{01}(1+\alpha_1 t) + R_{02}(1+\alpha_2 t) = (R_{01}+R_{02})(1+\alpha t)$$

$$R_{01} + R_{01}\alpha_1 t + R_{02} + R_{02}\alpha_2 t = R_{01} + R_{02} + (R_{01}+R_{02})\alpha t$$

$$\boxed{\alpha = \frac{R_{01}\alpha_1 + R_{02}\alpha_2}{R_{01}+R_{02}}}$$

In parallel :

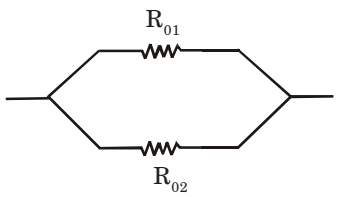

$$R = \frac{R_{01}R_{02}}{R_{01}+R_{02}}$$

At t C, $$\frac{1}{R_0(1+\alpha t)} = \frac{1}{R_{01}(1+\alpha_1 t)} + \frac{1}{R_{02}(1+\alpha_2 t)}$$

or $$\frac{R_{01}+R_{02}}{R_{01}R_{02}(1+\alpha t)} = \frac{1}{R_{01}(1+\alpha_1 t)} + \frac{1}{R_{02}(1+\alpha_2 t)}$$

Using the Binomial expansion, we have

$$\frac{1}{R_{02}}(1-\alpha t) + \frac{1}{R_{01}}(1-\alpha t) = \frac{1}{R_{01}}(1-\alpha_1 t) + \frac{1}{R_{02}}(1-\alpha_2 t)$$

i.e. $$at\left(\frac{1}{R_{01}} + \frac{1}{R_{02}}\right) = \frac{\alpha_1}{R_{01}}t + \frac{\alpha_2}{R_{02}}t$$

or $$\boxed{\alpha = \frac{\alpha_1 R_{02} +_2 R_{01}}{R_{01}+R_{02}}}$$

Example 43

An ammeter and votmeter are connected in series to a battery with an emf E = 6.0 volt. When acertain resistance is connected in parllel with the voltmeter, the reading of the latter decreases two times, whereas the reading of the ammeter increase the same number of times. Find the voltmeter readings after the connection of the resistance.

Soution. Let R_1 = resistance of ammeter

and R_2 = combined resistance of ammeter and voltmeter

In the first case current in the circuit,

$$i = \frac{6}{R_2} \qquad ...(i)$$

and voltage across voltmeter V = 6 – voltage across ammeter

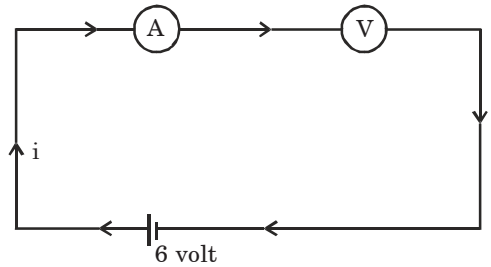

or $$V = 6 - iR_1$$

or $$V = 6 - \frac{6R_1}{R_2} \quad ..(ii)$$

In the second case reading of ammeter becomes two times, i.e., the total resistance becomes half while the resistance of ammeter remains unchanged. Hence,

$$i' = \frac{6}{R_2/2} = \frac{12}{R_2} \quad ...(iii)$$

and $$V' = 6 - (i')\,R_1$$

or $$V' = 6 - \frac{12R_1}{R_2} \quad ...(iv)$$

Further, it is given that $$V' = \frac{V}{2}$$

or $$6 - \frac{12R_1}{R_2} = 3 - \frac{3R_1}{R_2}$$

or $$\frac{R_1}{R_2} = \frac{1}{3}$$

Substituting this value in equation (iv), we have

$$V' = 6 - (12)\left(\frac{1}{3}\right)$$

or $$V' = 2 \text{ volt}$$ **Ans.**

Example 44

The gap between two plane plates of a capacitor equal to d is filled with a gas. One of the plates emits n_0 electrons per second, which while moving in an electric field, ionize gas molecules. This way each electron produces α new electrons (and ions) along a unit length of its path. Find the electronic current at the opposite plate, neglecting the ionization of gas molecules by formed ions. Take charge on an elecron as e.

Solution. Let n be the number of electrons at x = x.

Now, $$\frac{dn}{dx} = \text{increase in n per unit length}$$

$$= \alpha n$$

$\therefore$ $$\frac{dn}{n} = \alpha . dx$$

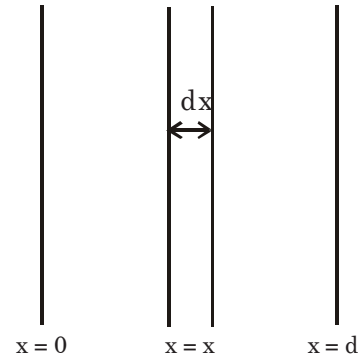

or $$\int_{n_0}^{n} \frac{dn}{n} = \alpha \int_0^d dx$$

$\therefore$ $$\ln\left(\frac{n}{n_0}\right) = \alpha d$$

or $$\frac{n}{n_0} = e^{\alpha d}$$

or $$n = n_0 e^{\alpha d}$$

Here, n is number of electrons reaching at other plate per unit time.

$\therefore$ Electronic current at opposite plate = charge reaching per unit time

or $$i = en$$

or $$i = en_0 e^{\alpha d}$$ **Ans.**

Example 45

A voltmeter of resistance R_1 and an ammeter of resistance R_2 are connected in series across a battery of negligible internal resistance. When a resistance R is connected in parallel to voltometer, reding of ammeter increases three times while that of voltmeter reduces to one third. Find R_1 and R_2 in terms of R.

Solution. Let E be the emf of the battery.

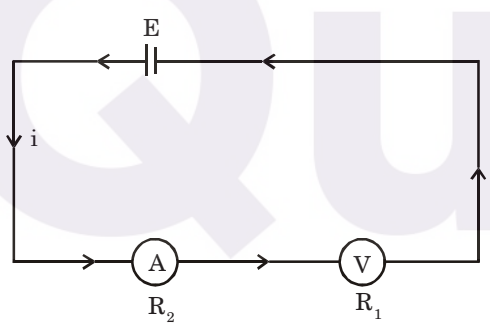

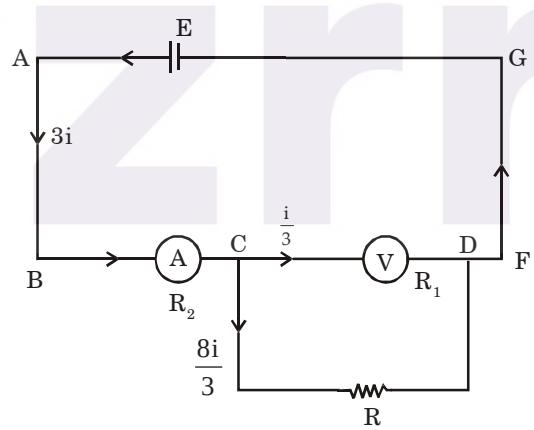

In the first case let i be the current in the circuit, then

$$E = i\,(R_1 + R_2) \quad \text{...(i)}$$

In the second case main current increases three times while current through voltmeter will reduce to i/3. Hence, the remaining 3i – i/3 = 8i/3 passes through R is shown in figure.

$$V_C - V_D = \left(\frac{i}{3}\right)R_1 = \left(\frac{8i}{3}\right)R$$

or $$R_1 = 8R$$ **Ans.**

Applying Kirchhoff's second law in loop ABFGA,

$$E = 3i(R_2) + (i/3)(R_1) = i\left(3R_2 + \frac{R_1}{3}\right) \quad ...(ii)$$

From Eqs. (i) and (ii),

$$R_1 + R_2 = 3R_2 + \frac{R_1}{3}$$

or $$2R_2 = \frac{2R_1}{3}$$

or $$R_2 = \frac{R_1}{3}$$

or $$R_2 = \frac{8R}{3}$$ **Ans.**

Example 46

A rod of length L and cross-section area A lies along the x-axis between x = 0 and x = L. The material obeys Ohm's law and its resistivity varies along the rod according to,

$$\rho(x) = \rho_0 e^{-x/L}$$

The end of the rod at x = 0 is at a potential V_0 and it is zero at x = L

(a) **Find the total resistance of the rod and the current in the wire**

(b) **Find the electric potential V (x) in the rod as a function of x.**

Solution. (a) Resistance of elementary section dx at x = x is,

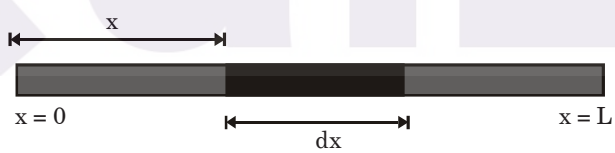

$$dR = \frac{\rho(x)dx}{A} \qquad \left(R = \rho\frac{1}{A}\right)$$

$$= \frac{\rho_0 e^{-\frac{x}{L}}.dx}{A}$$

Since all such elements are in series.

Therefore, $$R = \int_0^L dR = \frac{\rho_0}{A}\int_0^L e^{-\frac{x}{L}}\,dx = \frac{\rho_0 L}{A}(1 - e^{-1})$$

or $$R = \frac{\rho_0 L}{A}\left(1 - \frac{1}{e}\right)$$ **Ans.**

Current in the wire, $$i = \frac{V_0}{R} = \frac{V_0 A}{\rho_0 L}\left(\frac{e}{e-1}\right)$$ **Ans.**

(b) $$(dV) = idR$$

$$= \frac{V_0 A}{\rho_0 L}\left(\frac{e}{e-1}\right)\frac{\rho_0 e^{-x/L}}{A}dx$$

$$(dV) = \frac{V_0}{L}\left(\frac{e}{e-1}\right)e^{-x/L}dx$$

$\therefore$ $$\int_0^V dV = \frac{V_0}{L}\left(\frac{e}{e-1}\right)\int_0^x e^{-x/L}dx$$

or $$V - V_0 = V_0\left(\frac{e}{1-e}\right)(1 - e^{-x/L})$$

$\therefore$ $$V = \frac{V_0(e^{-x/L} - e^{-1})}{1 - e^{-1}}$$ **Ans.**

Example 47

What amount of heat will be generated in a coil of resistance R due to a charge q passing through it if the current in the coil

(a) **decreases down to zero uniformly during a time interval t_0 ?**

(b) **decreases down to zero halving its value every t_0 seconds ?**

How to Proceed : Heat generated in a resistance is given by,

$$H = i^2 Rt$$

We can directly use this formula provided i is constant. Here, i is varying. So, first we calculate i at any time t, then find a small heat dH in a short interval of time dt. Then by integrating it with proper limits we can obtain the total heat produced.

Solution. (a) The corresponding i-t graph will be a straight line with i decreasing from a peak value (say i_0) to zero in time t_0.

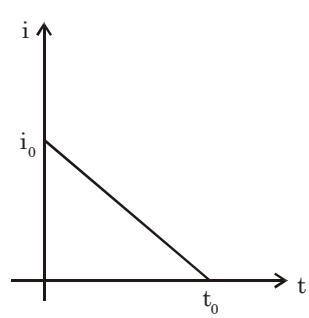

i-t equation will be as

$$i = i_0 - \left(\frac{i_0}{t_0}\right)t \qquad (y = -mx + c) \quad ...(i)$$

Here, i_0 is unknown, which can be obtained by using the fact that area under i-t graph gives the flow of charge. Hence,

$$q = \frac{1}{2}(t_0)(i_0)$$

$$\therefore \qquad i_0 = \frac{2q}{t_0}$$

Substituting in (i), we get,

$$i = \frac{2q}{t_0}\left(1 - \frac{t}{t_0}\right)$$

or

$$i = \left(\frac{2q}{t_0} - \frac{2qt}{t_0^2}\right)$$

Now at time t, heat produced in a short interval dt is,

$$dH = i^2 R dt$$

$$= \left(\frac{2q}{t_0} - \frac{2qt}{t_0^2}\right)^2 R dt$$

$$\therefore \qquad \text{Total heat produced} = \int_0^{t_0} dH$$

or

$$H = \int_0^{t_0}\left(\frac{2q}{t_0} - \frac{2qt}{t_0^2}\right)^2 R\, dt$$

$$= \frac{4}{3}\frac{q^2 R}{t_0}$$ **Ans.**

(b) Here, current decreases from some peak value (say i_0) to zero exponentially with half life t_0. i-t equation in this case will be

$$i = i_0 e^{-\lambda t}$$

Here

$$\lambda = \frac{\ln(2)}{t_0}$$

Now, $$q = \int_0^\infty i\,dt = \int_0^\infty i_0 e^{-\lambda t}\,dt = \left(\frac{i_0}{\lambda}\right)$$

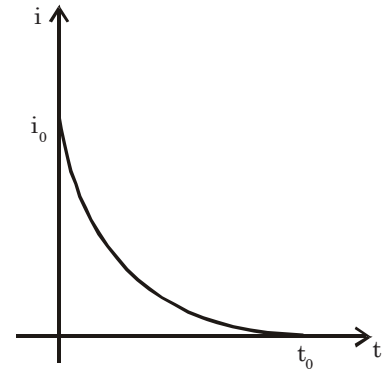

$\therefore$ $$i_0 = \lambda q$$

$\therefore$ $$i = (\lambda q)\ e^{-\lambda t}$$

$$dH = i^2 R\ dt = \lambda^2 q^2 e^{-2\lambda t}\ R dt$$

or $$H = \int_0^\infty dH = \lambda^2 q^2\ R \int_0^\infty e^{-2\lambda t} dt = \frac{q^2 \lambda R}{2}$$

Substituting $\lambda = \dfrac{\ln(2)}{t_0}$, we have $H = \dfrac{q^2 R \ln(2)}{2t_0}$ **Ans.**

Example 48

A conductor has a temperature independent resistance R and a total heat capacity C. At the moment t = 0 it is connected to a dc voltage V. Find the time dependence of the conductor's temperature T assuming the thermal power dissipated into surrounding space to vary as q = k (T – T_0) where k is a constant, T_0 is the environmental temperature (equal to conductor's temperature at the initial moment).

How to Proceed : Here energy is being generated in the resistance at a rate of $\dfrac{V^2}{R}$. On which part of energy is being lost in the environment and the rest is utilized in raising the temperature of conductor. So, this is basically a problem of conservation of energy.

Solution. Energy supplied by the dc source per unit time = energy lost in environment per unit time + energy used in raising the temperature of conductor per unit time.

Hence, $$\frac{V^2}{R} = k(T - T_0) + C\left(\frac{dT}{dt}\right)$$

$\therefore$ $$C\left(\frac{dT}{dt}\right) = \frac{V^2}{R} - k(T - T_0)$$

$\therefore$ $$= \frac{dT}{\frac{V^2}{R} - k(T - T_0)} = \frac{dt}{C}$$

Substituting the proper limits, we have

$$= \int_{T_0}^{T} \frac{dT}{\frac{V^2}{R} - k(T - T_0)} = \int_0^t \frac{dt}{C}$$

Solving this equation, we get

$$T = T_0 + \frac{V^2}{kR}(1 - e^{-\frac{kt}{C}})$$

This kind of question will become clearer if thermodynamics has been done by the student).

Example 49

An electrical circuit is shown in figure. Calculate the potential difference across the resistor of 400 ohm as will be measured by the voltmeter V of resistance 400 ohm either by applying Kirchhoff's rules or otherwise. (Jee 1996)

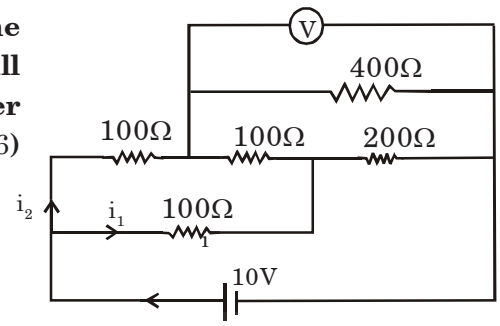

Solution. The given circuit actually forms-a balanced Wheatstone bridge (including the voltmeter) as shown in figure.

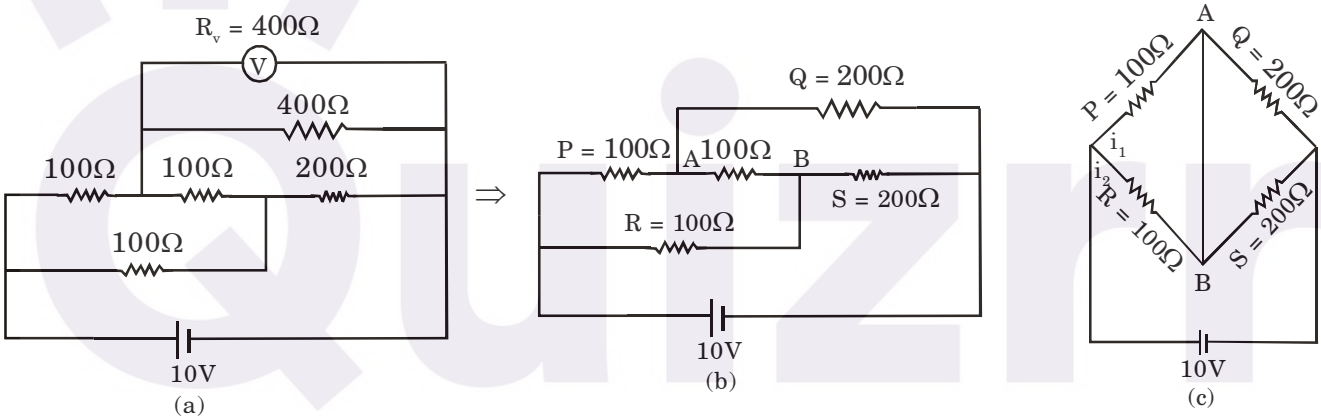

Here, we see that $\frac{P}{Q} = \frac{R}{S}$ (Bridge is balanced)

Therefore, resistance between A and B can be ignored and equivalent simple circuit can be drawn as shown in figure (c).

The voltmeter will read the potential difference across resistance Q.

$$\text{Currents } i_1 = i_2 = \frac{10}{100+200} = \frac{1}{30}\text{A}$$

$$\therefore \text{ Potential difference across voltmeter} = Qi_1 = (200)\left(\frac{1}{30}\right)\text{V} = \frac{20}{3}\text{V}$$

Therefore, reading of voltmeter will be $\frac{20}{3}$ V .

Example 50

Find the emf (V) and internal resistance (r) of a single battery which is equivalent to a parallel combination of two batteries of emfs V_1 and V_2 and internal resistances r1 and r2 respectively, with polarities as shown in figure.

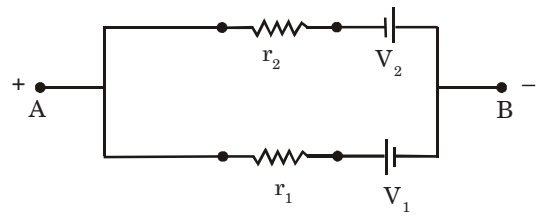

Solution. (i) **Equivalent emf (V) of the battery :** Potential difference across the terminals of the battery is equal to its emf when current drawn from the battery is zero. In the given circuit :

Current in the internal circuit $i = \dfrac{\text{Net emf}}{\text{Total resistance}} = \dfrac{V_1 + V_2}{r_1 + r_2}$

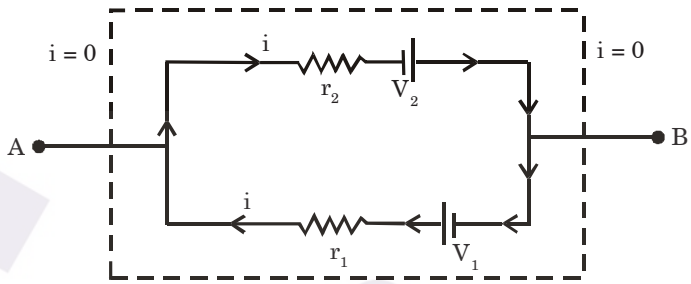

Therefore, potential difference between A and B would be

$$V_A - V_B = V_1 - ir_1$$

$$\therefore \quad V_A - V_B = V_1 - \left(\frac{V_1 + V_2}{r_1 + r_2}\right) r_1 = \frac{V_1 r_2 - V_2 r_1}{r_1 + r_2}$$

So, the equivalent emf of the battery is

$$\boxed{V = \frac{V_1 r_2 - V_2 r_1}{r_1 + r_2}}$$

Note that if $V_1 r_2 - V_2 r_1$ then $V = 0$

If $V_1 r_2 > V_2 r_1$ then $V_A - V_B$ = Positive, i.e., A side of the equivalent battery will become to positive terminal and vice-versa.

(ii) **Internal resistance (r) of the battery :** r_1 and r_2 are in parallel. Therefore, the internal resistance r will be given by

$$\boxed{\begin{aligned} \frac{1}{r} &= \frac{1}{r_1} + \frac{1}{r_2} \\ r &= \frac{r_1 r_2}{r_1 + r_2} \end{aligned}}$$

Example 51

The thin uniform wire AB of length 1 m, an unknown resistance X and a resistance of 12Ω are connected by thick conducting strips, as shown in the figure. A battery and a galvanometer (with a sliding jockey connected to it) are also available. Connections are to be made to measure the unknown resistance X using the principle of Wheatstone bridge. Answer the following questions.

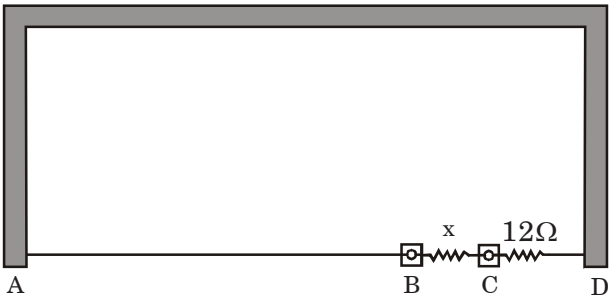

(a) **Are there positive and negative terminals on the galvanometer ?**

(b) **Copy the figure in your answer book and show the battery and the galvanometer (with jockey) connected at appropriate points.**

(c) **After appropriate connections are made, it is found that no deflection takes place in the galvanometer when the sliding jockey touches the wwire at a distance of 60cm from A. Obtain the value of the resistance X.**

Solution. (a) There are no positive and negative terminals on the galvanometer because only zero deflection is needed.

(b)

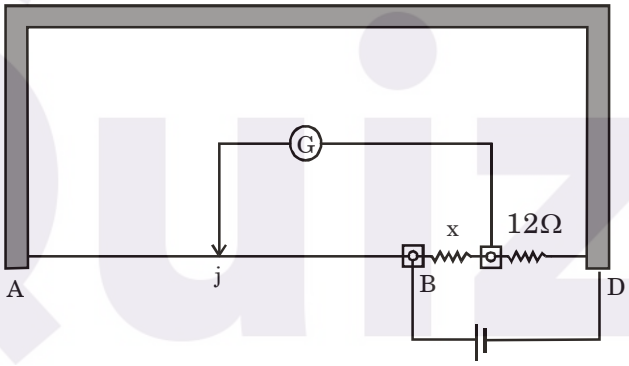

(c) AJ = 60 cm

∴ BJ = 40 cm

If no deflection is taking place. Then the Wheasone bridge is said to be balanced. Hence,

$$\frac{X}{12} = \frac{R_{BJ}}{R_{AJ}}$$

or $$\frac{X}{12} = \frac{40}{60} = \frac{2}{3}$$

or $$x = 8\Omega$$