Quizrr

India's Most Comprehensive & the Most Relevant Test Series designed according to the latest pattern of exams!

JEE MAIN | JEE ADV. | BITSAT | WBJEE | MHT CET

and many more...

Click here to join Test Series for 2022

It's time for you to crack upcoming IIT JEE Main & Advanced and other competitive exams with India's Most Trusted Online Test Series. **Many questions at JEE Main 2021 were same/similar to the ones asked in our test series.** That's the power of our test series!

Trusted by thousands of students & their parents across the nation

Our result in JEE Main 2021

150+
Got **99+ percentile** (overall)

301
Got **99+ percentile** in one or more subjects

85%
Improved their score by **25 percentile**

89%
Felt **overall confident** after the test series

Click here to join Test Series for 2022

MARKS

FREE Question Bank & Previous Year Questions for

JEE MAIN | JEE ADV. | BITSAT | WBJEE | MHT CET

and many more...

GET IT ON Google Play

Click on this button

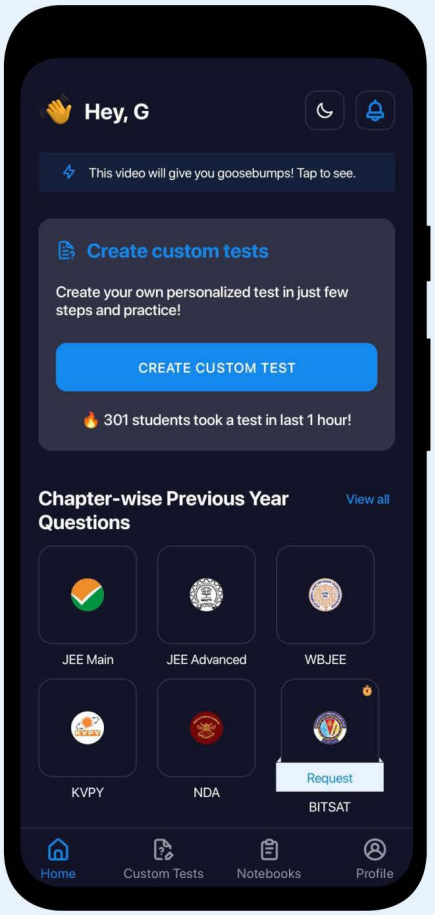

😎 Why download MARKS?

- 📚 Chapter-wise PYQ of JEE Main, JEE Advanced, NEET, AIIMS, BITSAT, WBJEE, MHT CET etc.
- 📚 Chapter-wise NTA Abhyas questions
- 🎯 Daily practice challenge and goal completion
- 🔖 Bookmark important questions and add them to your notebooks
- ✍️ Create unlimited Custom Tests

And all this for FREE. Yes, FREE! So what are you waiting for, download MARKS now.

4.8	30,000+	1,00,000+
Rating on Google Play	Students using daily	Questions available

GET IT ON Google Play

Click on this button

ELECTRO MAGNETIC INDUCTION

iQuizr

ELECTRO MAGNETIC INDUCTION

1. Introduction

Almost every modern device has electric circuits at its heart. We learned in the chapter of current electricity that an electromagnetic force (emf) is required for a current to flow in a circuit. But for most of the electric devices used in industry the source of emf is not a battery but an electrical generating station. In these stations other forms of energy are converted into electric energy. For example in a hydroelectric plant gravitational potential energy is converted into electric energy. Similarly, in a nuclear plant nuclear energy is converted into electric energy.

But how this conversion is done ? Or what is the physics behind this? The branch of physics, known as **electromagnetic induction** gives the answer to all these queries.

2 Magnetic Flux

Let us first discuss the concept of magnetic flux. We can represent any magnetic field by **magnetic lines.** Unlike the electric lines of force it is wrong to call them magnetic lines of force, because they do not point in the direction of the force on a charge. The force on a moving charged particle is always perpendicular to the magnetic field (or magnetic field lines) at the particle's position.

The magnetic field at any point is tangential to the field line at that point. Where the field lines are close, the magnitude of field is large, where the field lines are far apart, field magnitude is small. Also, because the direction of $\vec{B}$ at each point is unique, field lines never intersect. Unlike the electric field lines, magnetic lines form a closed loop.

Magnetic flux is the product of the average magnetic field times the perpendicular area that it penetrates.

Magnetic field

$$\textbf{Magnetic flux} = \phi \quad B \quad A$$

Area perpendicular to magnetic field B

Consider an element of area dS on an arbitary shaped surface as shown in figure. If the magnetic field at this element is $\vec{B}$, the magnetic flux through the element is,

$$d\phi_B = \vec{B} = \vec{d}S = BdS\cos\theta$$

Here $\vec{d}S$ is a vector that is perpendicular to the surface and has a magnitude equal to the area

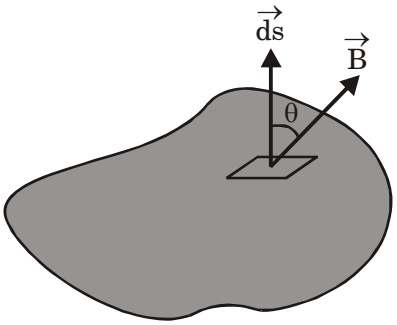

dS and θ is the angle between $\vec{B}$ and $\vec{dS}$ at that element. In general $d\phi_B$ varies from element to element. The total magnetic flux through the surface is the sum of the contributions from the individual area of elements.

$$\therefore \quad \phi_B = \int BdS\cos\theta = \int B.\vec{dS}$$

Note down the following points regarding the magnetic flux :

(i) Magnetic flux is a scalar quantity (dot product of two vector quantities is a scalar quantity)

(ii) The SI unit of magnetic flux is tesla-meter^2 (1 T-m^2). This is called weber (1Wb)

1 Wb = 1 T – m^2 = 1 N-m/A

Thus unit of magnetic field is also weber/m^2 (1 Wb/m^2),

or 1 T = 1 Wb/m^2

(iii) The contribution to magnetic flux for a given area is equal to the area times the component of magnetic field perpendicular to the area.

3. Gauss's Law for Magnetism

The net flux out of the closed surface is zero, but the flux through the open surface is not.

By analogy with Gauss's law for the electric field, we would write a Gauss's law for the magnetic field as follows :

$$\Phi_B = Cq_{\text{magnetic inside}}$$

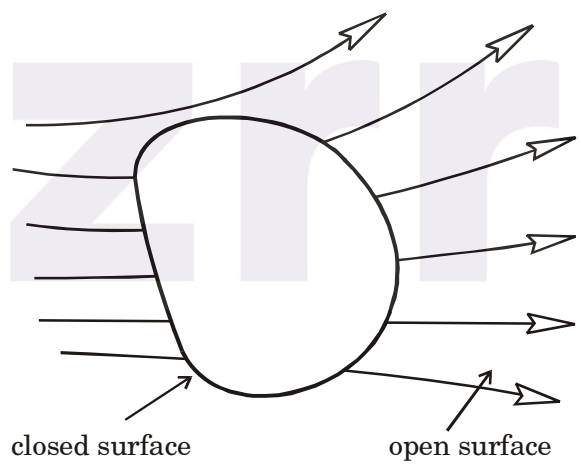

where Φ_B is the outward magnetic flux through a closed surface, C is a constant, q magnetic inside is the "magnetic charge" inside the closed surface. Extensive searches have been made for single magnetic charge. However, none has ever been found. Thus, Gauss's law for magnetism can be written

$$\Phi_B = 0 \text{ (Gauss's law for magnetism)}$$

or $$\int \vec{B}.d\vec{S} = 0$$

4. Faraday's Law

This law states that **"when the magnitude flux through a conducting loop changes with time an emf is induced in the loop"** and is given by

$$\in = -\left(\frac{d\phi}{dt}\right) = \text{induced emf}$$

[-ve sign shows that the induced emf has the opposing tendency].

Some Points :

(i) induced current = $\dfrac{\text{induced emf}}{R} = \dfrac{1}{R}\left|\dfrac{d\phi}{dt}\right|$

(ii) Total charge flown through the loop = $\int i\,dt = \left|\dfrac{\Delta\phi}{R}\right|$

(iii) As we have seen, induced emf is produced only when there is a change in magnetic flux passing through a loop. The flux passing through the loop is given by,

$$\phi = BS\cos\theta$$

This, flux can be changed in several ways :

(a) The magnitude of $\vec{B}$ can change with time. In the problems if magnetic field is given a function of time, it implies that the magnitude field is changing. Thus,

$$B = B(t)$$

(b) The current producing the magnetic field can change with time. For this the current can be given as a function of time. Hence,

$$i = i(t)$$

(c) The area enclosed by the loop can change with time.

This can be done by pulling a loop inside (or outside) a magnetic field. By doing so, the area enclosed by loop (hatched area) can be changed.

(d) The angle θ between $\vec{B}$ and the normal to the loop can change with time.

This can be done by rotating a loop in a magnetic field.

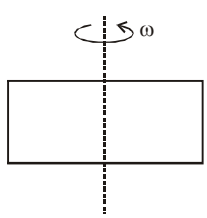

(e) Any combination of the above can occur.

(iv) If a circuit is a coil consisting of N loops all of same area and if ϕ_B is the flux through one loop, an emf is induced in every loop, thus the total induced emf $(e) = -N\frac{d\phi}{dt}$

Example 1

A 10 ohm coil of mean area 500 cm^2 and having 1000 turns is held perpendicular to a uniform field of 0.4 gauss. The coil is turned through 180 in $\left(\frac{1}{10}\right)$s. Calculate

(a) the charge in flux

(b) the average induced emf

(c) average induced current

(d) the total induced charge

Solution :

(a) When the plane of a coil is perpendicular to the field, the angle between area $\vec{S}$ and field $\vec{B}$ is 0 . So the flux linked with the coil,

$\phi_1 = BS\cos\theta = NBS\cos 0° = NSB$

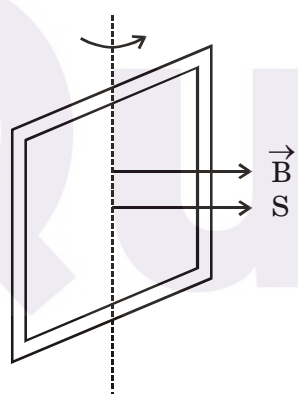

Now, when the coil is turned by 180 .

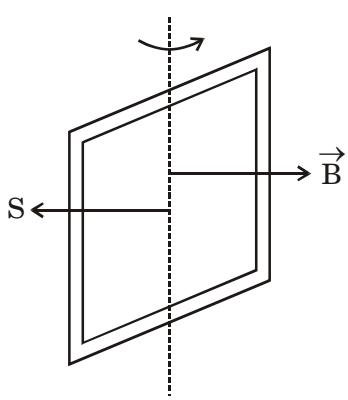

$\phi_2 = NSB\cos 180$

$= -NSB$

$$\Delta\phi = \phi_2 - \phi_1 = -NSB - (NSB)$$
$$= -2\ NSB$$

i.e. $$|\Delta\phi| = 2 \quad 10^3 \quad (500 \quad 10^{-4}) \quad (0.4 \quad 10^{-4})$$
$$= 4\ mWb$$

(b) As in turning through 180 , i.e. in change of flux $\Delta\phi$, the coil take $(^1/_{10})$s.

$$|e_{av}| = \frac{|\Delta\phi|}{\Delta t} = \frac{2NSB}{\Delta t} = \frac{2NSB}{\Delta t} = \frac{4 \times 10^{-3}}{10^{-1}} = 40mV$$

(c) $$I_{av} = \frac{e_{av}}{R} = \frac{0.04}{10} = 4\ mA$$

(d) $$q = \int I dt = I_{av}\ \Delta t = 4 \times 10^{-3} \times 10^{-1} = 400\ \mu\ C$$

5. Lenz's Law

According to the Lenz law, a loop will always oppose the change in the flux passing through it. This law can be used as an replacement for finding the direction of induced emf by faraday's law.

Example 2

A bar magnet is freely falling along the axis of a circular loop as shown in figure. State whether its acceleration a **is equal to, greater than or less than the acceleration due to gravity** g**.**

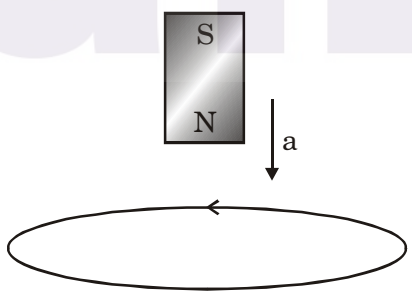

Solution :

a < g. Because to Lenz's law, whatever may be the direction of induced current, it will oppose the cause. Here the cause is, the free fall of magnet and so the induced current will oppose it and the acceleration of magnet will be less than the acceleration due to gravity g. This can be understood in a different manner. When the magnet falls downwards with its north pole downwards. The magnetic field lines passing through the coil in the downward direction increase. Since the induced current opposes this, the upper side of the coil will become north pole, so that field lines of coil's magnetic field are upwards. Now like poles repel each other. Hence, a < g.

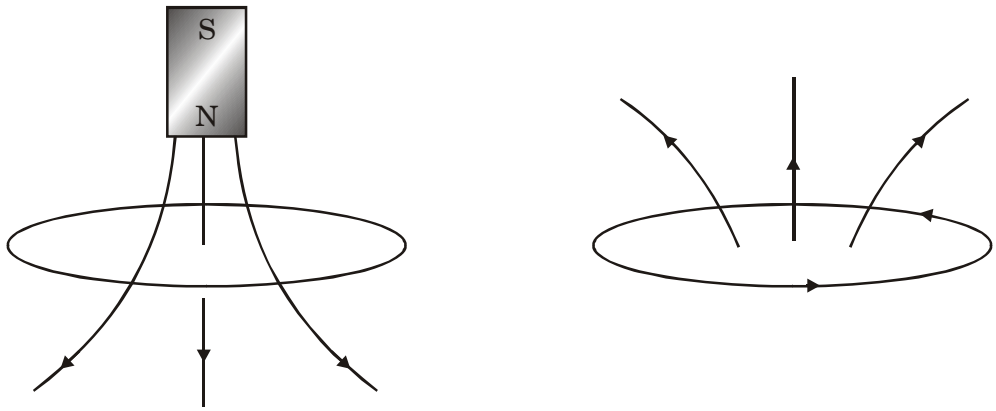

Thus, the from Lenz's law, we can say that the direction of induced emf will be such as to oppose the change that causes it i.e., the direction of induced increase in flux while it will be in same direction if there is decrease in flux linked with the closed circuit. Analytically,

$$e = -\frac{d\phi}{dt}$$

Here, negative sign shows that if flux increases e is negative, i.e. is in the direction opposite to that of applied emf and vice-versa.

Example 3

As shown in the figure, the rod AB is sliding on the frame with a velocity v in the direction shown. Magnetic field exists with the direction into the plane of loop. Find the direction of the induced emf and its magnitude.

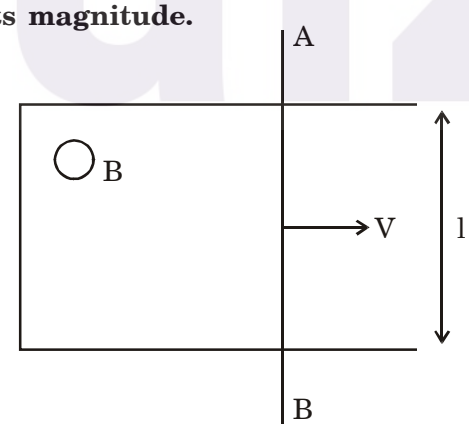

Solution :

There are two approaches to solve question based on EMI

Method – I : (More appropriate)

Find the magnitude of induced emf using $E = \left|\frac{d\phi}{dt}\right|$

Use the Lenz's law to find the direction of the emf.

$$\phi(\text{at any instant}) = Bl\,x$$

$$\therefore \quad \frac{d\phi}{dt} = Bl\left(\frac{dx}{dt}\right) = Blv$$

$$\therefore \quad \varepsilon = \left|\frac{d\phi}{dt}\right| = Blv$$

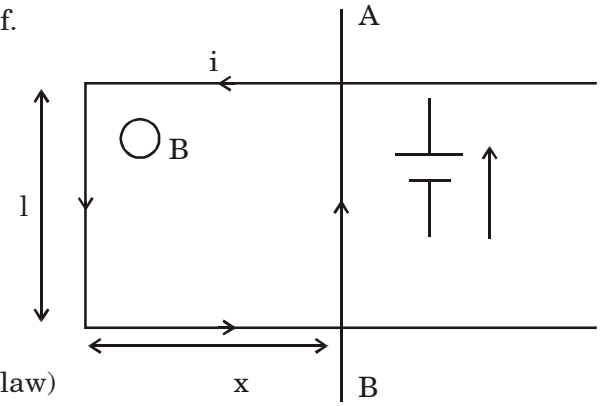

the directions of induced emf is as shown (Lenz's law)

2nd Method :

– Assume the circulation in any direction as +ve

The area vector is that direction is taken +ve

– If emf is the end comes out + ve it is the direction of induced emf, otherwise if – ve, then it is in opposite direction of assumed direction.

Counter-clockwise is Assumed + ve

$$\phi = \vec{B}.\vec{A}$$

$$= B\,(lx)\cos\pi = -\,Blx$$

$$\therefore \quad \in = \left(\frac{-\,d\phi}{dt}\right) = (Blv)$$

$\therefore$ emf is + ve, then emf is anticlockwise.

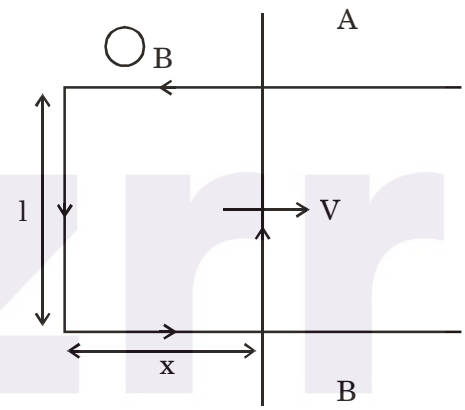

Example 4

A circular conducting loop of radius a, is bent along its diameter and placed perpendicular to uniform $\vec{B}$ field. Now, the upper half is rotated with content ω about the common diameter. Then, find the current induced in the loop and plot it. (resistance = R)

Solution :

$$\phi = -\,B\,\frac{\pi a^2}{2} + B\,\frac{(\pi a^2)}{2}\cos\theta$$

$$= \frac{-\,B(\pi a^2)}{2} + \frac{B(\pi a^2)}{2}\cos\omega t$$

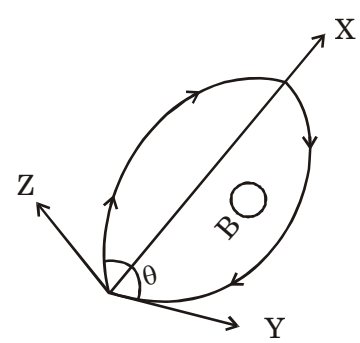

$$\therefore \quad \left|\frac{d\phi}{dt}\right| = \omega\left(\frac{B\pi a^2}{2}\right)\sin\omega t$$

$$\therefore \quad \text{induced current} = \left(\frac{\omega B\pi a^2}{2R}\right)\sin\omega t$$

and direction obtained from Lenz's law.

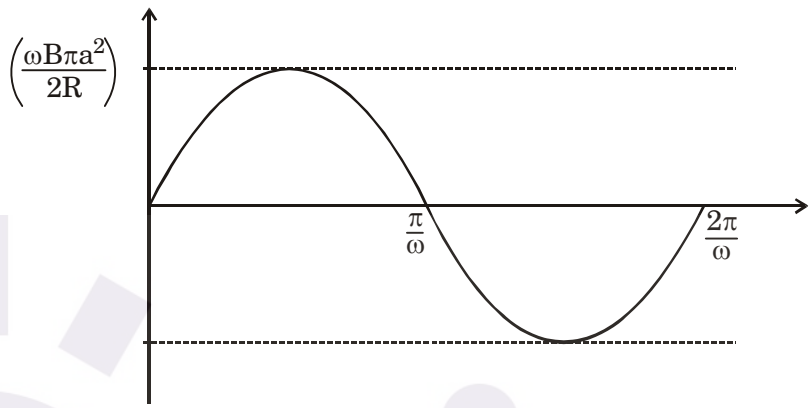

Example 5

A semi-circular conducting loop of radius a is rotated with constant ω. Find the emf induced in the loop as function of time.

Solution :

$$\phi = BA = B\left(\frac{1}{2}r^2\theta\right)$$

$$\therefore \quad \in = \left|\frac{d\phi}{dt}\right| = B\left(\frac{1}{2}\right)a^2\left(\frac{d\theta}{dt}\right) = \left(\frac{Ba^2}{2}\right)\omega$$

The direction of current obtained from Lenz's law.

Note that after every half rotation the direction of the current in the loop changes.

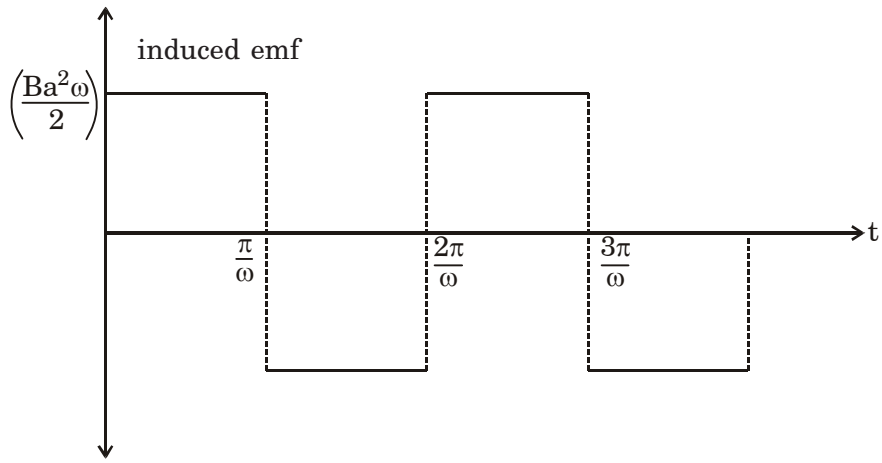

Example 6

Find the direction of the induced current in loop when a magnetic dipole NS is moved towards it as shown (a << d)**.**

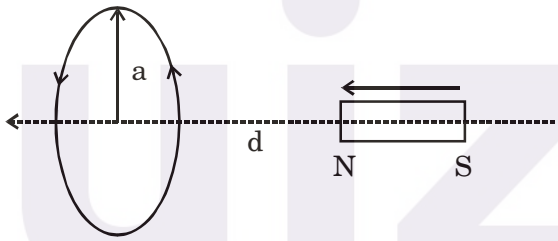

Solution :

$B = \left(\frac{\mu_0}{4\pi}\right)\left(\frac{2M}{d^3}\right)$ Since flux is increasing therefore, the current induced produces a field is such a way that it opposes the magnetic field.

Example 7

A conducting loop is placed in magnetic field as shown and magnetic field varies with time as $\left(\frac{d\mathbf{B}}{dt}\right) = 1\ T/s$**. Resistance /unit length = 1 Ω/m. Then find the induced current in wire EF.**

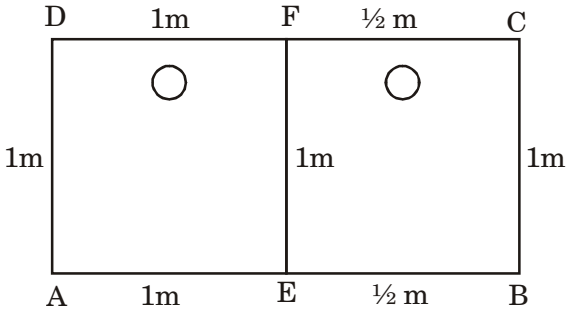

Solution :

Flux in loop ADFE

$$\phi_1 = BA = B\ (1)$$

$$\in_1 = \left|\frac{d\phi_1}{dt}\right| = \left(\frac{dB}{dt}\right) = 1V$$

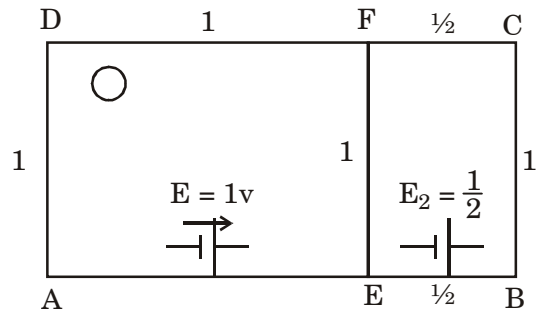

Now, flux in loop BCFE

$$\phi_2 = BA = B\left(\frac{1}{2}\right)$$

$$\in_2 = \left|\frac{d\phi_2}{dt}\right| = \left(\frac{dB}{dt}\right)\frac{1}{2} = \frac{1}{2}V$$

Now, to find the current use KVL

In loop (1)

$$E_1 = (I - i) + I + I + I$$

$$\Rightarrow \quad 1 = (4I - i) \qquad ...(1)$$

In loop (2)

$$E_2 = i + \frac{1}{2}i - (I - i) + \frac{1}{2}i$$

$$\frac{1}{2} = 3i - I \qquad ...(2)$$

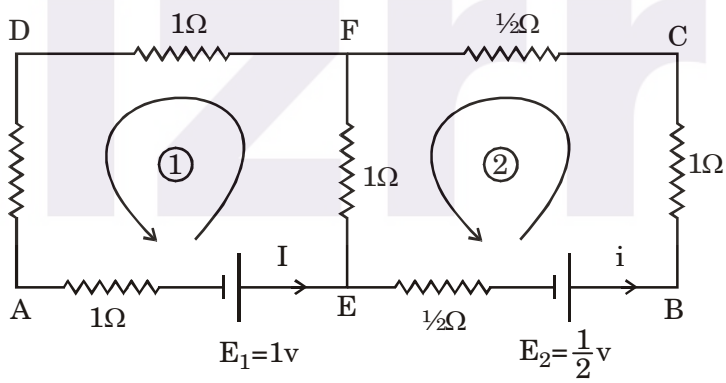

using (1) and (2)

$$\Rightarrow \quad i = \frac{3}{11}A \text{ and } I = \frac{7}{22}A$$

6. Motional Emf

If a conductor moves in a magnetic field then an emf is induced in the conductor across its ends.

Consider a rod of length l moving in the $\vec{B}$ field. Hence, electrons experience magnetic force.

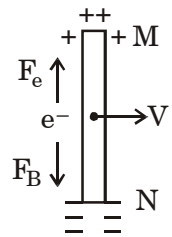

Due to accumulation of charge at one end, $\vec{E}$ field is set up inside the conductor and at any given instant the $\vec{E}$ force becomes equal to $\vec{B}$ force, when further motion of the electrons stop.

$$\vec{F}_B + \vec{F}_e = 0$$

$$\Rightarrow \quad \left[-e\left(\vec{v}\times\vec{B}\right)\right] + -e\vec{E} = 0$$

$$\therefore \quad \boxed{\left(\vec{v}\times\vec{B}\right) = -\vec{E}}$$

Now, the potential drop that exists along the ends MN of the conductor is given by

$$\left(V_M - V_N\right) = -\int \vec{E}.\vec{dl}$$

$$\boxed{V_{MN} = \int\left(\vec{v}\times\vec{B}\right).\vec{dl}}$$

$$\therefore \quad V_{MN} = \int \vec{B}.\left(\vec{dl}\times\vec{v}\right)$$

The direction of induced emf can be obtained using the Fleming's Right Hand Rule.

Fleming's Right Hand Rule

index $\rightarrow$ along the $\vec{B}$ field

thumb $\rightarrow$ along the velocity

middle finger $\rightarrow$ direction of induced emf

In general, to solve the question based on motional emf.

(i) Resolve the $\vec{B}$ field into two components, one parallel to the plane of motion and the other perpendicular to the plane of motion.

(No contribution of the component of $\vec{B}$ parallel to the field)

(ii) Resolve the velocity vector $\vec{v}$ in the plane of motion of the rod into two components, one along the length of the rod and one perpendicular to the length of the rod.

(No contribution of the component of $\vec{v}$ parallel to the rod).

(iiii) Apply $\Delta V = \int B_{\perp}.\vec{v}_{\perp}dl$

Note : If $\vec{B}, \vec{v}$ are mutually perpendicular.

$\therefore$ Emf induced $= \int \vec{B}.\left(\vec{dl} \times \vec{v}\right)$

$= \vec{B}.\left(\int \vec{dl} \times \vec{v}\right)$

$= \vec{B}.\left(\vec{l}_{eff} \times \vec{v}\right)$

$\therefore$ $\boxed{\text{Induced emf} = \vec{B}.\left(\vec{l}eff \times \vec{v}\right)}$ only when $\vec{B}$ is perpendicular to $\vec{v}$

$\therefore$ For closed loop, $\oint \vec{dl} = 0$, $\therefore$ emf induced = 0

Note that, when $\vec{B}$ and $\vec{v}$ are perpendicular and we have a closed loop then net emf induced in the entire loop is zero, (but not zero for individual segments).

Example 8

Two rods making an angle 2θ between them and of equal length fall vertically with velocity $\vec{v}$ when uniform magnetic field $\vec{B}$ exists as shown. Find the emf induced across MN.

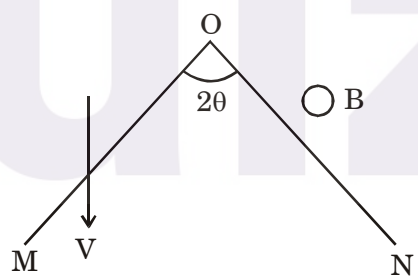

Solution :

Emf induced

$= Bv\ (leff)$

$= Bv\ (2l\ \sin\theta)$

$= 2\ Bvl\ \sin\theta$

$\therefore$ $V_N - V_M = 2\ Bvl\sin\theta$

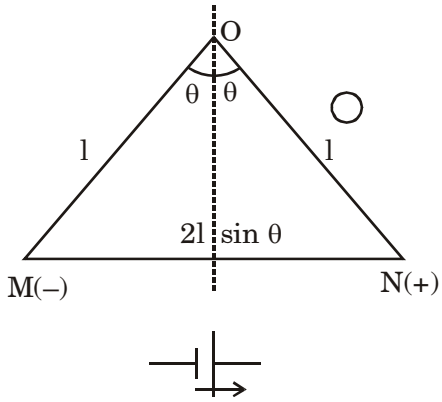

Emf induced in individual segment is

$$(V_0 - V_M) = Blv \sin\theta$$

$$(V_N - V_0) = Bl \sin\theta$$

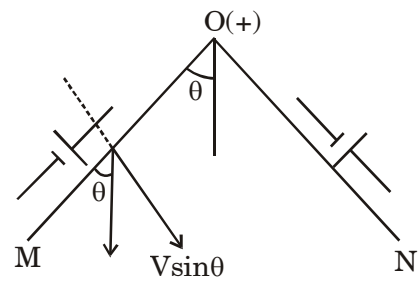

Motional emf

Motional emf is equal to ratio of change of flux through the generated area.

$$\phi = Blx$$

$$\therefore \quad = \frac{d}{dt}(Blx) = Blv$$

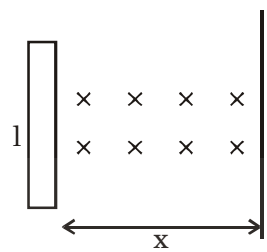

Motional Emf induced along the length of a rod which is rotated in a magnet field.

Consider a rod of length l which is rotated in uniform field B as shown.

emf induced

$$= \int_0^l B(\omega x)dx$$

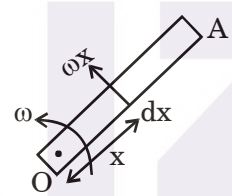

$$(V_0 - V_A) = \frac{B\omega l^2}{2}$$ (direction obtained from Fleming's Right Hand rule)

Note that an emf is induced even in the absence of a magnetic field when a conductor is rotated about an axis because of the centrifugal force experienced by each particle.

But the net situation after considering the effect of centrifugal force can be described as :

$$eE = m\omega^2 x + eB(\omega x)$$

$$\therefore \quad E = \left(\frac{m}{e}\right)\omega^2 x + (B\omega x)$$

$\therefore$ the actual potential drop across the ends is given as

$$(V_0 - V_M) = -\int_{r_m}^{r_0} \vec{E}.d\vec{x} = -\int_l^0 E dx$$

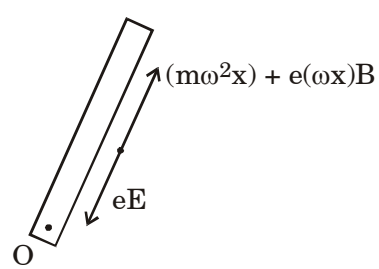

$$= \int_0^l \left(\frac{m}{e}\omega^2 x + B\omega x\right) dx = \left[B\omega + \frac{m\omega^2}{e}\right]\frac{l^2}{2}$$

But, since $\frac{m}{e}$ is much smaller, the quantity $\frac{m\omega^2 l^2}{2e}$ is neglected and hence we derive the particular result.

Example 9

A disc is rotated with uniform angular velocity, ω. Find the potential drop between the centre and a circumferencial point.

Solution :

In this case,

$$eE = m\omega^2 x$$

$$\therefore \quad E = \left(\frac{m}{e}\omega^2 x\right)$$

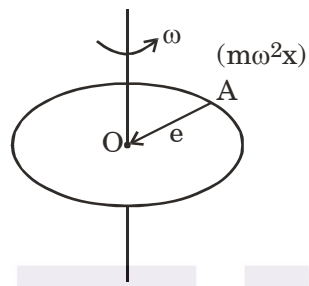

$$\therefore \quad \text{Potential drop} = \int_0^R \frac{m}{e}\omega^2 x\, dx = \left(\frac{m\omega^2 R^2}{2e}\right)$$

Example 10

A conductor falls freely under gravity in the region of magnetic field created by a straight current wire. Find the emf induced.

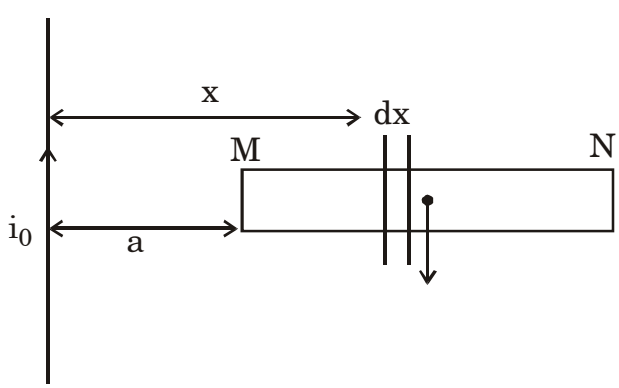

Solution :

$$V_N - V_M = \int_a^{l+a} \frac{\mu_0 i_0}{2\pi x}(v)\,dx = \frac{\mu_0 i_0 v}{2\pi} \ln\left(\frac{l+a}{a}\right)$$

$\therefore$ emf induced will be a function of time = $\frac{\mu_0 i_0}{2\pi} \ln\left(\frac{l+a}{a}\right)[gt]$

General result for emf induced when any shape of conductor is rotating in magnetic field.

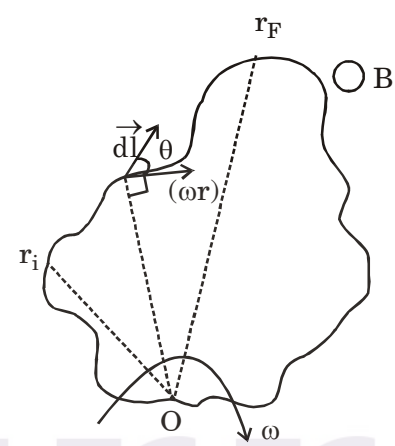

– Note that the $\vec{dl}$ vector will be directed to the tangent direction of the shape of conductor at that point

– The velocity vector (ωr) is directed perpendicular to the $\vec{r}$ vector

– Let the angle between them be θ.

$\therefore$ emf induced in this small element

= Bdl (ωr sinθ)

= B (ωr) (dl sinθ)

= B ωr dr {dl sin θ = dr}

$\therefore$ emf induced between any points r_i and r_f

$$= \int_{r_i}^{r_f} B\,\omega r\,dr = \frac{B\omega}{2}\left[r_f^2 - r_i^2\right]$$

Thus to find the emf induced between any points of any shape of conductor rotating about an axis.

$$\boxed{\underset{(i \to f)}{\Delta V} = \frac{B\omega}{2}\left[r_f^2 - r_i^2\right]}$$

Direction from ($r_i \to r_f$) when $\vec{B}$ is directed ◯ (and ω is clockwise)

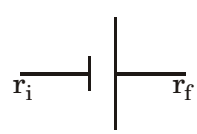

Points to Remember

1.

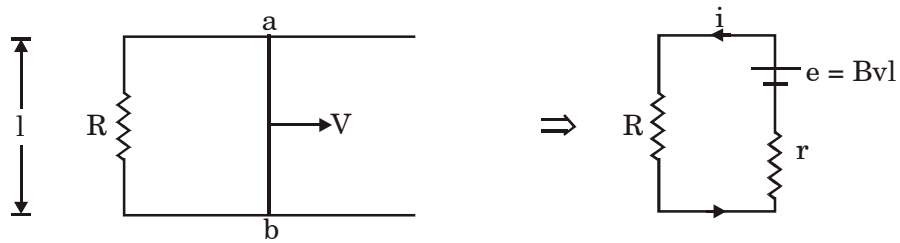

In the figure shown, we can replace the moving rod ab by a battery of emf Bvl with the positive terminal at a and the negative terminal at b. The resistance r of the rod ab may be treated as the internal resistance of the battery. Hence, the current in the circuit is,

$$i = \frac{e}{R + r}$$

or

$$I = \frac{Bvl}{R + r}$$

2. **Induction and energy transfers :** In the figure shown, if you move the conductor ab with a constant velocity v, the current in the circuit is,

$$i = \frac{Bvl}{R} \qquad (r = 0)$$

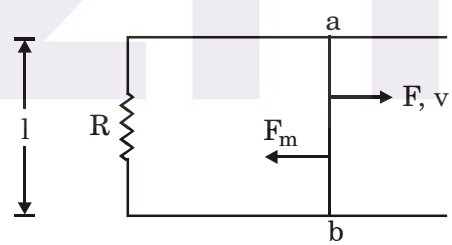

A magnetic force $F_m = ilB = \frac{B^2l^2v}{R}$ acts on the conductor in opposite direction of velocity. So, to move the conductor with a constant velocity v an equal and opposite force F has to be applied in the conductor. Thus,

$$F = F_m = \frac{B^2l^2v}{R}$$

The rate at which work is done by the applied force is, $P_{applied} = Fv = \frac{B^2l^2v^2}{R}$

and the rate at which energy is dissipated in the circuit is,

$$P_{dissipated} = i^2R = \left(\frac{Bvl}{2}\right)^2 R = \frac{B^2I^2v^2}{R}$$

This is just equal to the rate at which work is done by the applied force.

3. Motional emf is not a different kind of induced emf, it is exactly the induced emf described by Faraday's law, in the case in which there is a conductor moving in a magnetic field. $e = -\frac{d\phi_B}{dt}$ is best applied to problems in which there is a changing flux through a closed loop while e = Bvl is applied to problem in which a conductor moves through a magnetic field. Note that, if a conductor is moving in a magnetic field but circuit is not closed, then only P. D will be asked between two points of the conductor. If the circuit is closed, then current will be asked in the circuit. Now let us see how these two are similar.

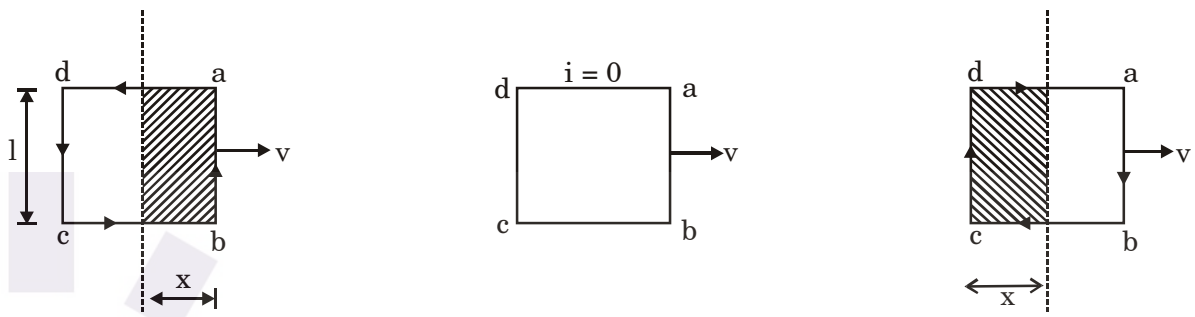

(a) (b) (c)

Refer figure (a) : A loop abcd enters a uniform magnetic field B at constant speed v. Using Faraday's equation

$$|e| = \left|-\frac{d\phi_B}{dt}\right| = \frac{d(BS)}{dt} = \frac{d(Blx)}{dt} = Bl\frac{dx}{dt} = Blv$$

For the direction of current, we can use Lenz's law. As the loop enters the field $\otimes$ magnetic field passing through the loop increases, hence, current in the loop is anticlockwise. ($\otimes$ IN). From the theory of motional emf, e = Bvl and using right hand rule, current in the circuit is anticlockwise. Thus, we see that $e = -\frac{d\phi_B}{dt}$ and e = Bvl give the same result. In the similar manner we can show that current in the loop in figure (b) is zero and in figure (c) it is clockwise.

Example 11

Two parallel rails with negligible resistance are 10.0 cm apart. They are connected by a 5.0 Ω resistor. The circuit also contains two metal rods having resistances of 10.0 Ω and 15.0 Ω along the rails. The rods are pulled away from the resistor at constant speeds 4.0 m/s and 2.0 m/s respectively. A uniform magnetic field of magnitude 0.01 T is applied perpendicular to the plane of the rails. Determine the current in the 5.0 Ω resistor.

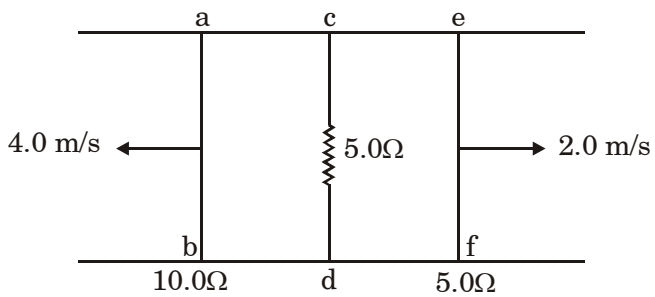

How to proceed : Here two conductors are moving in uniform magnetic field. So, we will use the motional approach. The rod ab will act as a source of emf.

$$e_1 = Bvl = (0.01)\ (4.0)\ (0.1) = 4 \quad 10^{-3}\ V$$

and internal resistance $r_1 = 10.0\ \Omega$

Similarly, rod ef will also act as a source of emf.

$$e_2 = (0.01)\ (2.0)\ (0.1) = 2.0 \quad 10^{-3}\ V$$

and internal resistance $r_2 = 15.0\ \Omega$

From right hand rule we can see that

$$V_b > V_a \text{ and } V_e > V_f$$

Now either by applying Kirchhoff's laws or applying principle of superposition (discussed in the chapter of current electricity) we can find current through 5.0 Ω resistor. We will here use the superposition principle. You solve it by using Kirchhoff's laws.

Solution :

In the figures R = 5.0 Ω, r_1 = 10 Ω, r_2 = 15 Ω, $e_1 = 4 \quad 10^{-3}$ V and $e_2 = 2 \quad 10^{-3}$ V

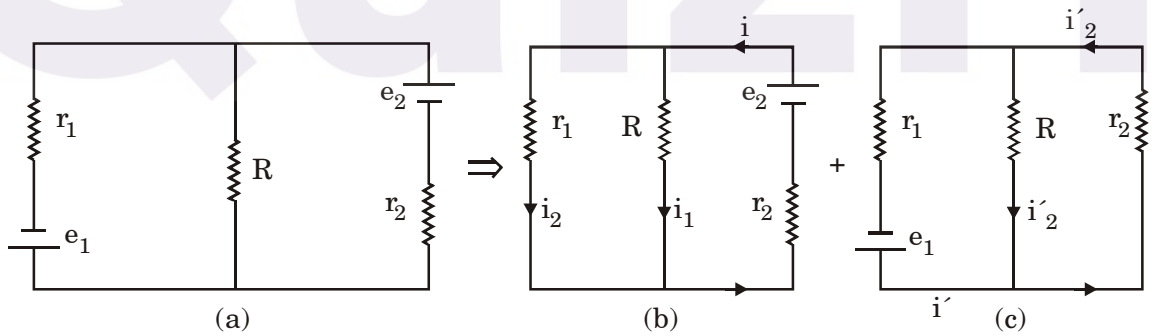

Refer figure (b) : Net resistance of the circuit = $r_2 + \dfrac{Rr_1}{R + r_1} = 15 + \dfrac{10 \times 5}{10 + 5} = \dfrac{55}{3}\Omega$

$$\text{current } i = \frac{e_2}{\text{net resistance}} = \frac{2 \times 10^{-3}}{55/3} = \frac{6}{55} \times 10^{-3}\,A$$

$\therefore$ current through R, $i_1 = \left(\frac{r_1}{R + r_1}\right) i = \left(\frac{10}{10 + 5}\right)\left(\frac{6}{55} \times 10^{-3}\right) A$

$$= \frac{4}{55} \times 10^{-3} A$$

$$= \frac{4}{55} mA$$

Refer figure (c) : Net resistance of the circuit = $r_1 + \frac{Rr_2}{R + r_2} = 10 + \frac{5 \times 15}{5 + 15} = \frac{55}{4} \Omega$

$\therefore$ current $i' = \frac{e_1}{\text{net resistance}} = \frac{4 \times 10^{-3}}{55/4} = \frac{16}{55} \times 10^{-3} A$

$\therefore$ current through R, $i_1' = \left(\frac{r_2}{R + r_2}\right) i' = \left(\frac{15}{15 + 5}\right)\left(\frac{16}{55}\right) \times 10^{-3} A$

$$= \frac{12}{55} mA$$

From superposition principle net current through 5.0 Ω resistor is

$i_1' - i_1 = \frac{8}{55}$ mA from d to c. **Ans.**

Example 12

A conducting rod shown in figure of mass m and length l moves on two frictionless parallel rails in the presence of a uniform magnetic field directed into the page. The rod is given an initial velocity v_0 to the right and is released at t = 0. Find as a function of time,

(a) the velocity of the rod.

(b) the induced current and

(c) the magnitude of the induced emf

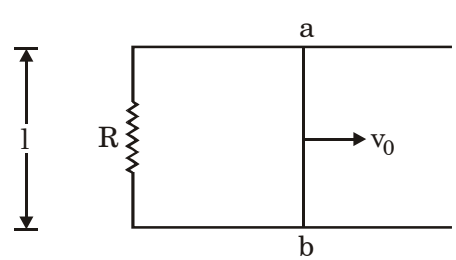

How to proceed : The initial velocity will produce an induced emf and hence, an induced current in the circuit. The current carrying wire will now experience a magnetic force $(\vec{F}_m)$ in opposite direction of its velocity. The force will retard the motion of the conductor. Thus,

Initial velocity → motional emf → induced current → magnetic force → retardation

Solution :

(a) Let v be the velocity of the rod at time t.

Current in the circuit at this moment is, $i = \frac{Bvl}{R}$ ...(i)

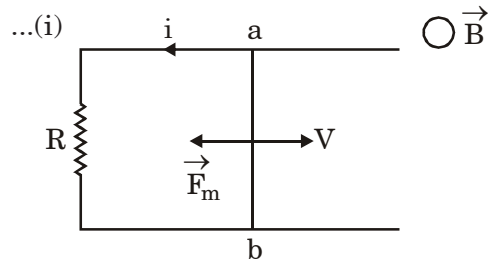

From right hand rule we can see that this current is in counterclockwise direction.

The magnetic force is, $F_m = ilB = -\frac{B^2l^2}{R}v$

Here negative sign denotes that the force is to the left and retards the motion. This is the only horizontal force acting on the bar, and hence, Newton's second law applied to motion in horizontal direction gives,

$$m\frac{dv}{dt} = F_m = -\frac{B^2l^2}{R}v$$

$$\therefore \quad \frac{dv}{v} = -\left(\frac{B^2l^2}{mR}\right)dt$$

Integrating this equation using the initial condition that, $v = v_0$ at $t = 0$, we find that

$$\int_{v_0}^{v}\frac{dv}{v} = -\frac{B^2l^2}{mR}\int_0^t dt$$

Solving this equation, we find that $v = v_0e^{-t/\tau}$ ...(ii) **Ans.**

where $\tau = \frac{mR}{B^2l^2}$

This expression indicates that the velocity of the rod decreases exponentially with time under the action of the magnetic retarding force.

(b) $$i = \frac{Bvl}{R}$$

Substituting the value of v from Eq. (ii), we get $i = \frac{Blv_0}{R}e^{-t/\tau}$ **Ans.**

(c) $e = iR = Blv_0e^{-t/\tau}$ **Ans.**

i and e both decrease exponentially with time. v-t, i-t and e-t graphs are as shown in Fig.

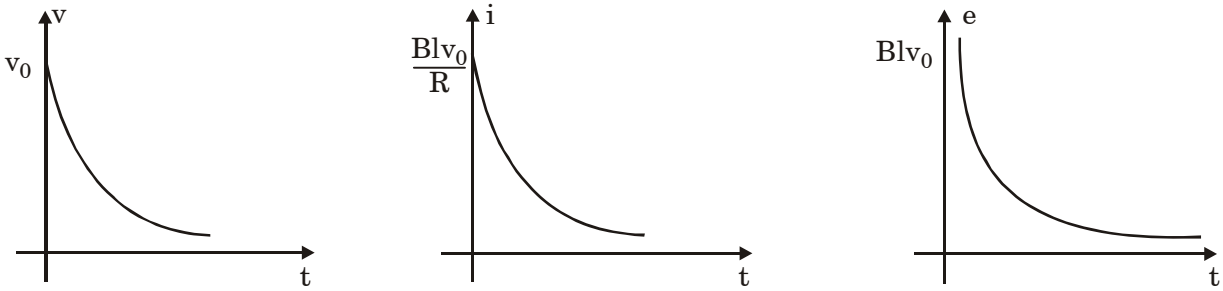

Example 13

A circular loop is being rotated about the point O. Find the induced emf about (1) AC (2) CD (3) AD (4) OA.

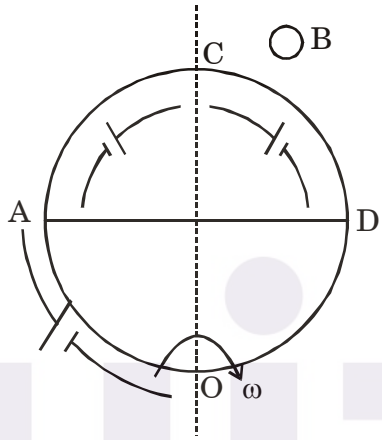

Solution :

(i) OA

$$\left(V_A - V_0\right) = \frac{B\omega^2}{2}\left[r_A^2 - r_0^2\right] = \frac{B\omega}{2}\left[2R^2\right] = B\omega R^2 \qquad \left\{\begin{matrix} r_A = \sqrt{2}\,R \\ r = 0 \end{matrix}\right\}$$

(ii) AC

$$\left(V_C - V_A\right) = \frac{B\omega^2}{2}\left[r_C^2 - r_A^2\right] = \frac{B\omega}{2}\left[4R^2 - 2R^2\right] = B\omega R^2$$

$$(V_C - V_0) = 2B\omega R^2$$

(iii) CD

$$V_D - V_C = \frac{B\omega}{2}\left[r_D^2 - r_C^2\right] = \frac{B\omega^2}{2}2R^2 - 4R^2 = -B\omega R^2$$

$$V_C - V_D = +B\omega R^2$$

(iv) OA

$$V_D - V_O = +B\omega R^2$$

Note that net emf induced in loop = 0

7. Time-Varying Magnetic field

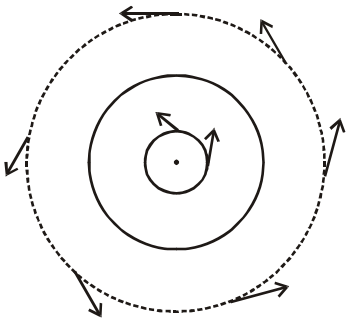

– Due to a time varying magnetic field, a non conservative electric field is induced inside and outside the region of magnetic field, which forms always a closed loop.

– The electric field lines of a non conservative field is always in the form of closed loop.

Consider a cylindrical region which extends from + ∞ to – ∞ and in which the magnetic field varies as a function of time.

$$\boxed{B = f(t)}$$

(i) For $r \le R$

consider a circular region at an axial distance r.

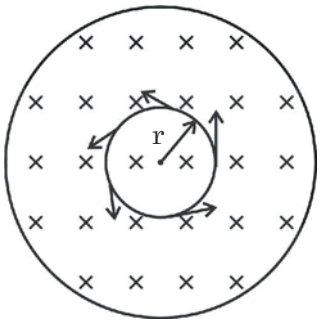

From Faraday's Law, potential energy in the loop = $\frac{-d\phi}{dt}$

$$\Rightarrow \int \vec{E}.\,\vec{dl} = \frac{-d}{dt}\left(\vec{B}.\ \vec{A}\right)$$

$$\Rightarrow \int \vec{E}.\,\vec{dl} = \frac{-d}{dt}\left(B\left(-\pi r^2\right)\right) = \left(\frac{dB}{dt}\right)\pi r^2$$

$$E\,(2\pi r) = \left(\frac{dB}{dt}\right)\pi r^2$$

$$\therefore \quad \boxed{E = \left(\frac{dB}{dt}\right)\left(\frac{r}{2}\right)} \qquad r \le R$$

If this is +ve, then direction of electric field is in the direction of circulation.

(ii) for $r \ge R$

$$\int \vec{E}.\vec{dl} = \frac{-d}{dt}\left(B\left(-\pi R^2\right)\right)$$

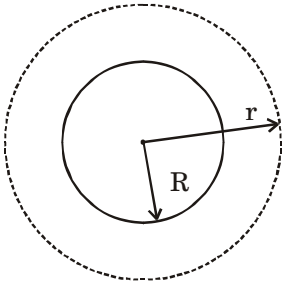

$$\therefore \quad \boxed{E\,(2\pi r) = \left(\frac{dB}{dt}\right)\pi R^2}$$

$$\therefore \quad E = \left(\frac{dB}{dt}\right)\left(\frac{R^2}{2r}\right)$$

Some important results for linear conductor placed in the time-varying field

(i) $r \le R$

Emf induced in the conductor

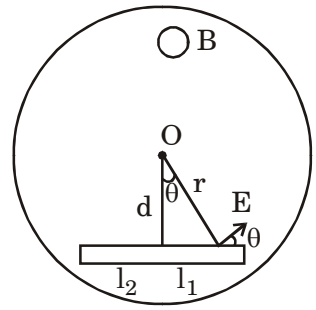

$$= \int \vec{E}.\vec{dl}$$

$$= \int E\, dx \cos\theta$$

$$= \int \frac{1}{2}\left(\frac{dB}{dt}\right) r\, dx \cos\theta$$

$\{d = r \cos\theta\}$

$$\boxed{\in = \frac{1}{2}\left(\frac{dB}{dt}\right) d \int_{-l_2}^{l_1} dx}$$

(ii) $r > R$

Emf induced in the conductor

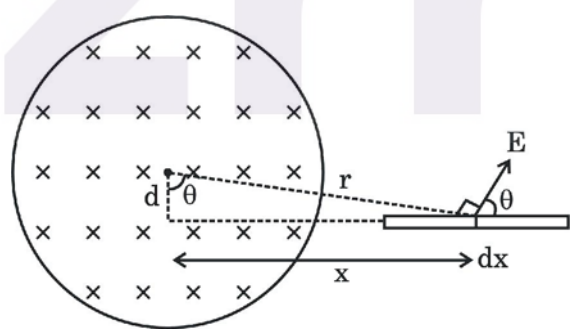

$$= \int E\, dx \cos\theta$$

$$= \int \frac{1}{2}\left(\frac{dB}{dt}\right)\frac{R^2}{r}\, dx\left(\frac{d}{r}\right)$$

$$= \frac{1}{2}\left(\frac{dB}{dt}\right) R^2\, d \int_{a}^{a+l} \frac{dx}{\left(d^2 + x^2\right)}$$

$$= \frac{1}{2}\left(\frac{dB}{dt}\right) R^2\, d \left|\frac{1}{d}\tan^{-1}\left|\frac{x}{d}\right|\right|_{a}^{a+l}$$

$$= \frac{1}{2}\left(\frac{dB}{dt}\right) R^2 \left[\tan^{-1}\left(\frac{a+l}{d}\right) - \tan^{-1}\left(\frac{a}{d}\right)\right]$$

$$\boxed{\therefore \text{ Emf induced in the conductor} = \frac{1}{2}\left(\frac{dB}{dt}\right) R^2 \left|\tan^{-1}\left(\frac{x}{d}\right)\right|}$$

Example 14

A non-conducting ring of radius a **is placed in a cylindrical region of magnetic field B of radius R. A charge q is uniformly distributed over the circular ring. Now, the magnetic field is suddenly switched off. Then find the angular velocity acquired by the ring and also find its magnetic moment for (i)** $a \le R$ **(ii)** $a > R$

Solution :

(i) $a \le R$

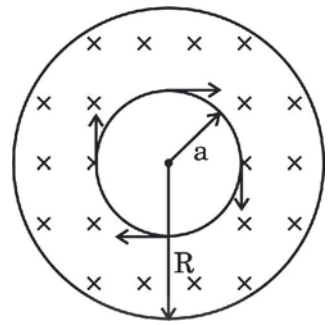

Concept : When the magnetic field is suddenly switched off, a time-varying electric field is induced in the region, which is non-conservative in nature. Since, this electric field acts tangentially to each element of the ring, a torque is experienced in the ring.

$$\tau = \int (dq) E a \quad \text{[about centre O]}$$

$$\tau = Q\ E\ a$$

Due to this sudden torque, an angular impulse is imparted which is equal to change in angular momentum.

$$\int \tau\, dt = (I\omega)$$

$$\Rightarrow \quad \int (QEa)\, dt = \left(ma^2\right)\omega$$

$$\Rightarrow \quad \int Q\left(\frac{1}{2}\frac{dB}{dt}\right) a^2\ dt = \left(ma^2\right)\omega$$

$$\left(\frac{Qa^2}{2}\right) B = \left(ma^2\right)\omega$$

$$\boxed{\omega = \frac{Q\,B}{2ma}}$$

Magnetic moment = iA = $\left(\frac{Q\omega}{2\pi}\right)\pi a^2 = \frac{Q}{2}\left(\frac{QB\ a^2}{2ma}\right)\left(\frac{Q^2\ Ba}{4\ m}\right)$

(ii) When $a > R$

only the expression for $\vec{E}$ will change $\vec{E} = \frac{1}{2}\left(\frac{dB}{dt}\right)\left(\frac{R^2}{r}\right)$

$$\int \tau \, dt = I\omega$$

$$\Rightarrow \quad \int Q\left(\frac{1}{2}\frac{dB}{dt}\frac{R^2}{a}\right) a \; dt = Iw$$

$$\frac{1}{2} QR^2 \left[\int \frac{dB}{dt} dt\right] = \left(ma^2\right)\omega$$

$$\frac{1}{2} QR^2 \, B = \left(ma^2\right)\omega$$

$$\therefore \quad \omega = \left(\frac{QR^2B}{2ma^2}\right)$$

Magnetic moment = $iA = \left(\frac{Q\omega}{2\pi}\right)\pi a^2 = \left(\frac{Q^2R^2B}{2.\,2m}\right) = \left(\frac{Q^2R^2B}{4m}\right)$

8. Self Inductance

When the current in a loop varies with time, the magnetic flux through the conducting loop change with time and an emf is induced in the loop. This is called self induction.

$\phi \; \alpha \; B$

and $B \; \alpha \; i$

$\therefore$ $\boxed{\phi \; \alpha \; i}$

$\Rightarrow$ $\boxed{\phi = Li}$ where L is called the coefficient of self inductance.

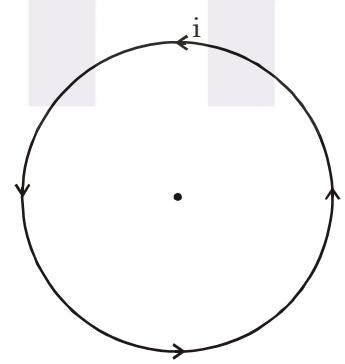

Hence emf induced across the inducting loop

$$\boxed{e = -\left(\frac{d\phi}{dt}\right) = -L\left(\frac{di}{dt}\right)}$$

Inductance of a coil depends on

(a) Geometrical shape and size of the loop

(b) The medium in which the loop is placed.

Example 15

Find the self inductance of a circular coil of radius R and number of turns N.

Solution :

We will find the self inductance for very small circular coil for which the $\vec{B}$ field can be almost assumed to be constant inside the ring.

$$B = \left(\frac{\mu_0 i N}{2R}\right)$$

$$\therefore \quad \phi = \left(\frac{\mu_0 i N}{2R}\right)\left(\pi R^2\right)N$$

$$\phi = \left(\frac{\mu_0 N^2 \pi R}{2}\right)i$$

$$\therefore \quad L = \left(\frac{\mu_0 \pi}{2} R N^2\right)$$

Solenoid's self inductance

$$B = (\mu_0 ni)$$

$$\phi = (\mu_0 ni)\ (\pi R^2)\ N$$

$$= (\mu_0 n\ N\pi R^2)\ i$$

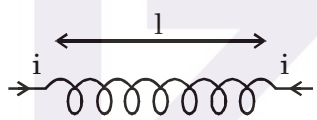

$$\phi = \left(\frac{\mu_0 N^2 \pi R^2}{l}\right)i$$

here n is the number of turns per unit length $n = \frac{N}{l}$

$$\boxed{\therefore \quad L = \left(\frac{\mu_0 N^2 \pi R^2}{l}\right) = \left(\mu_0 n^2 \pi R^2\right)l}$$

9. Mutual Inductance

When the current in the primary loop varies with time the magnetic flux through the secondary loop changes with time hence an emf is induced across the secondary coil. This is called mutual induction.

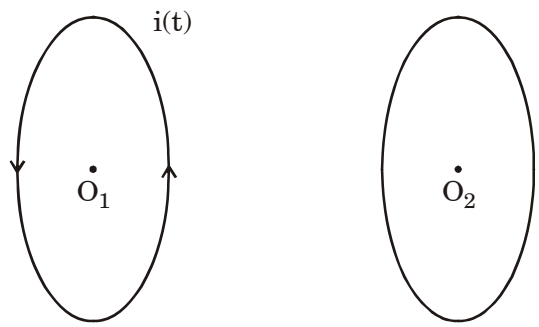

$\phi_s \ \alpha \ i_p$

$\therefore \quad \boxed{\phi_s = Mi_p}$ $\left\{ \begin{array}{c} \text{where } \phi_s \text{ is the flux linked with secondary} \\ \text{coil and } i_p \text{ is current in primary coil} \end{array} \right\}$

M = coefficient of mutual inductance

Emf induced in secondary coil,

$$\in = -\frac{d\phi_s}{dt} = -M\left(\frac{di_p}{dt}\right)$$

Mutual inductance of two coils depends on the :

(a) Geometrical size and shape of the loops

(b) Relative orientations of the loop

(c) The medium in which they are placed.

Example 16

(a) Two concentric coplanar circular coils of radii a **and** b **are having turns N_1 and N_2** (a << b) **are given. Find the mutual inductance of the pair.**

(b) If the outer loop is connected with a source of emf V = (4 + 2.5t**), then find the induced current in smaller loop.** (a **= 10^{-2}m),** b **= 0.1 m, $\lambda = 10^{-4}\ \Omega/_m$**

Solution :

(a) $\phi_s = (BA)\ N_1$

$$= \left(\frac{\mu_0 i_p N_2}{2b}\right)\left(\pi\ a^2\right) N_1$$

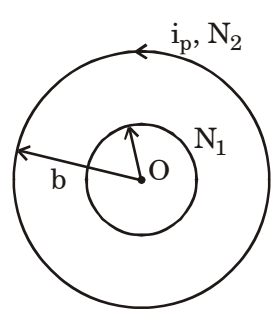

$$= \left(\frac{\mu_0\ \pi a^2\ N_1\ N_2}{2b}\right) i_p$$

$$\therefore \quad M = \left(\frac{\mu_0 \pi a^2\ N_1\ N_2}{2b}\right)$$

(b) current in outer loop $= \dfrac{(4 + 2.5t)}{R_0}$

induced emf in inner loop $= -\dfrac{d\phi}{dt} = \dfrac{-d}{dt}(Mi_P) = \dfrac{-d}{dt}\left(\dfrac{M}{R_0}\right)(2.5t + 4)$

$$= \frac{-M(2.5)}{R_0}$$

$\therefore$ current in secondary $= \dfrac{-M\ (2.5)}{R_0\ R_i}$

Example 17

Two coplanar concentric square loops are placed as shown with (a << b). Find the mutual inductance of the system.

Solution :

Magnetic field at the centre due to each wire

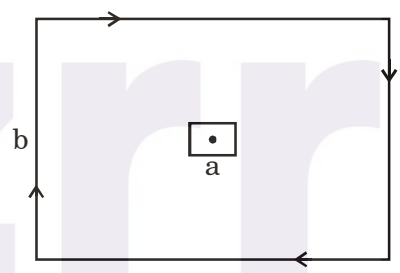

$$= \frac{\mu_0 i}{4\pi(b)/2}\left|\sin\theta\right|_{-\frac{\pi}{4}}^{\frac{\pi}{4}}$$

$$= \frac{\mu_0 i}{4\pi b}(2) \times \left(\frac{2}{\sqrt{2}}\right) = \left(\frac{\mu_0 i\sqrt{2}}{2\pi b}\right)$$

= Magnetic field due to the square frame

$$= \left(\frac{\mu_0 i\sqrt{2}}{2\pi b}\right) \times 4 = \left(\frac{2\sqrt{2}\ \mu_0 i}{\pi b}\right)$$

$$\therefore\ \phi_s = \left(\frac{2\sqrt{2}\,\mu_0 i_p}{\pi b}\right)a^2$$

$$\boxed{\therefore\ M = \frac{2\sqrt{2}}{\pi}\left(\frac{\mu_0 a^2}{b}\right)}$$

Example 18

Two circular coils are placed co-axially at a distance $d >> R_2$. Hence, find the mutual inductance of system.

Solution :

$$B = \frac{\mu_0 \, i_p \, R_1^2}{2\left(R_1^2 + d^2\right)^{3/2}}$$

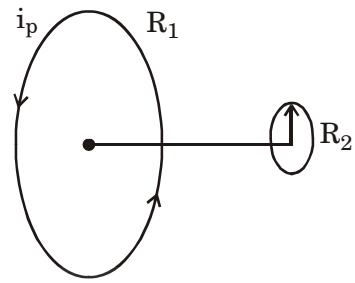

$$\therefore \quad \phi = \frac{\mu_0 \, i_p \, R_1^2}{2\left(R_1^2 + d^2\right)^{3/2}}\left(\pi R_2^2\right)$$

$$\therefore \quad M = \frac{\mu_0 \, \pi R_2^2 \, R_1^2}{2\left(R_1^2 + d^2\right)^{3/2}}$$

Example 19

Find the mutual inductance of l length of two co-axial solenoid of radii r_1 and r_2 and turns n_1 and n_2.

Solution :

$$B = \mu_0 \, n_2 \, i_p$$

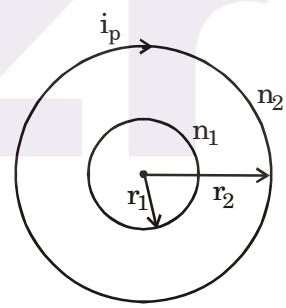

$$\therefore \quad \phi = \left(\mu_0 \, n_2 \, i_p\right)\left(\pi r_1^2\right)\left(n_1 l\right)$$

$$\therefore \quad \boxed{M = \mu_0 \left(\pi r_1^2\right) l n_1 \, n_2}$$

In this formula of mutual inductance radius is always of inner coil.

Example 20

Two concentric coplanar circular loops are placed as shown. A constant current i_0 is flowing in the outer loop. Now the smaller loop is rotated with constant ω about the common diameter. Then, find the current induced in the smaller loop.

Solution :

$$\phi_s = \left(\frac{\mu_0 i}{2b}\right)\pi a^2 \cos \omega t$$

[since, the inner loop is rotating with constant ω]

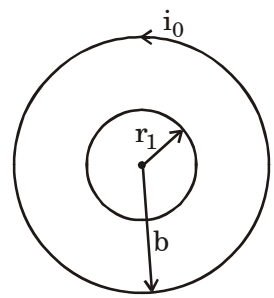

$$\therefore \quad \in = -\left(\frac{d\phi_s}{dt}\right) = \left(\frac{\omega\,\mu_0\,i_0\,\pi a^2}{2b}\right)\sin\omega t$$

$$\therefore \quad i = \frac{1}{R}\left(\frac{\omega\,\mu_0\,i\,\pi a^2}{2b}\right)\sin\omega t$$

10. Potential drop across an inductor

- When the current in the inductor is increasing

  $(V_a > V_b)$

  $$(V_a - V_b) = L\left(\frac{di}{dt}\right)$$

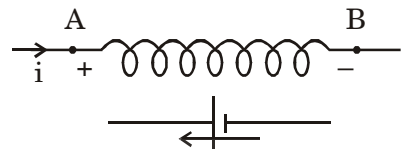

- When the current in the inductor is decreasing

  $$(V_b - V_a) = L\left|\frac{di}{dt}\right|$$

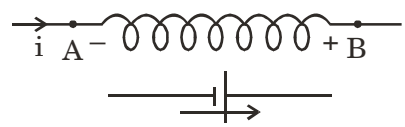

11. Series and Parallel Combinations of Inductors

(A) Series combination

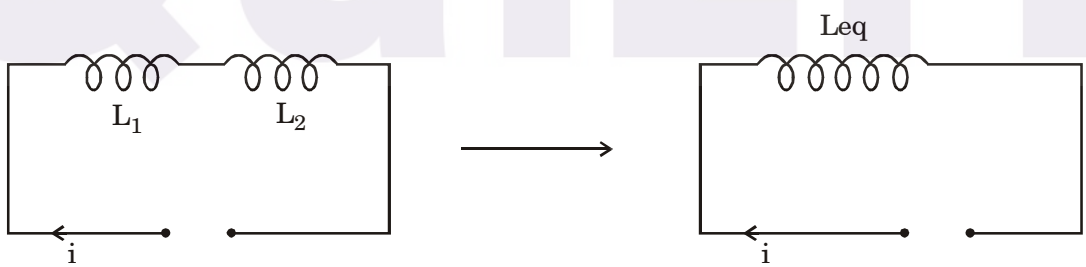

$$V = (V_1 + V_2)$$

$$L_{eq}\left(\frac{di}{dt}\right) = L_1\left(\frac{di}{dt}\right) + L_2\left(\frac{di}{dt}\right)$$

$$L_{eq} = L_1 + L_2$$

(B) Parallel combination

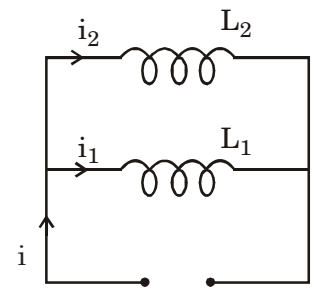

$i = i_1 + i_2$

$$\left(\frac{di}{dt}\right) = \left(\frac{di_1}{dt}\right) + \left(\frac{di_2}{dt}\right)$$

$$\frac{V}{L_{eq}} = \frac{V}{L_1} + \frac{V}{L_2} \qquad \therefore \quad \boxed{\frac{1}{L_{eq}} = \frac{1}{L_1} + \frac{1}{L_2}}$$

Mutual inductance of two coils

It is given by $\boxed{M = \sqrt{L_1 L_2}}$

where L_1, L_2 are the inductances of two coils

In series combination, when mutual inductance of the coil is taken in consideration

$L_{eq} = L_1 + L_2 \pm 2M$

(a)

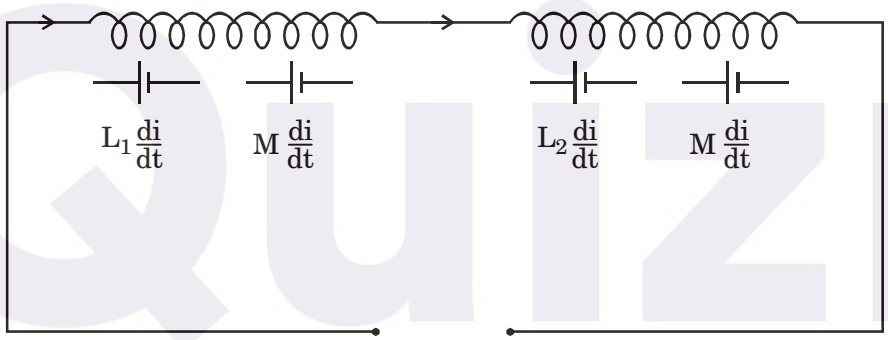

$L_{eq} = L_1 + L_2 + 2M$

(b)

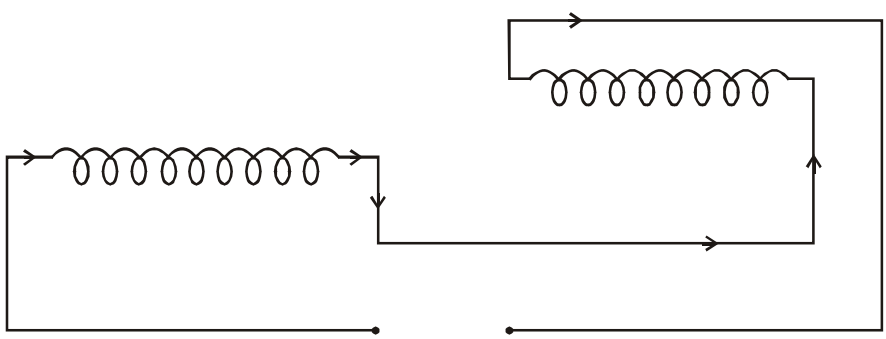

$L_{eq} = L_1 + L_2 - 2M$

Note : When the current is increasing in inductor, the induced emf opposes the flow of current and hence is induced in the opposite direction of current flow.

12. Growth and Decay of Current in L-R Circuits

(i) **Growth of Current**

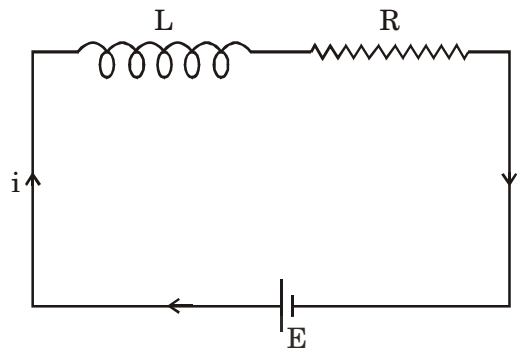

$$L\frac{di}{dt} + iR = \in$$

$$\Rightarrow \frac{di}{(\in - iR)} = \left(\frac{1}{L}\right)dt$$

$$\Rightarrow \int_{i_0}^{i_s} \frac{di}{(\in - iR)} = \left(\frac{1}{L}\right)\int_0^t dt$$

$$\ln \frac{(\in - i_s R)}{(\in - i_0 R)} = -\left(\frac{R}{L}\right)t$$

$$(\in - i_s R) = (\in - i_0 R)\, e^{-\frac{Rt}{L}}$$

$$\boxed{i(t) = i_0 + (i_s - i_0)\left(1 - e^{-t/\tau}\right)}$$

$$\boxed{\left(\frac{di}{dt}\right) = \frac{(i_s - i_0)}{\tau}\left(e^{-t/\tau}\right)}$$

Time constant of LR circuit

It is the time in which the current through an induction would acquire its steady state value, had it been increasing with initial constant rate.

$$\boxed{\tau = \frac{i_s - i_0}{\left|\frac{di}{dt}\right|_{t=0}}}$$

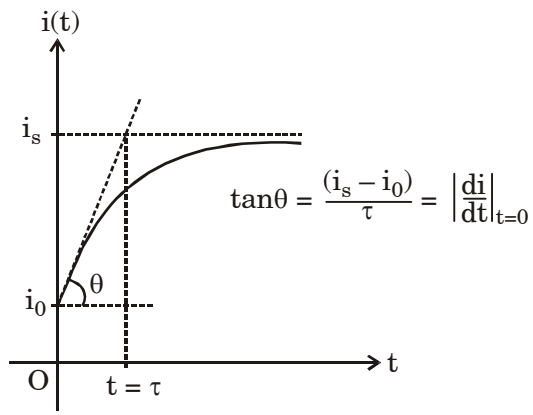

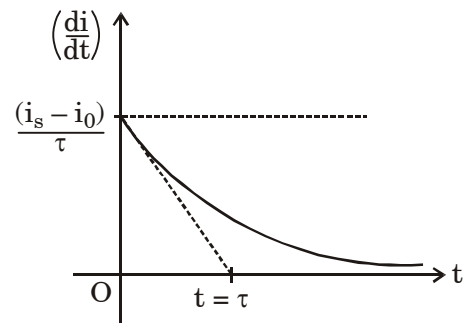

$i(\tau) = i_0 + (i_s - i_0)0.63$

(ii) Decay of current through LR circuit

$$L\left(\frac{di}{dt}\right) + iR = 0$$

$$\int_{i_0}^{i(t)} \frac{di}{i} = -\frac{R}{L}\int_0^t dt$$

$$\boxed{i(t) = i_0\, e^{-\frac{Rt}{L}}}$$

$$\frac{di}{dt} = \frac{-i}{\tau} e^{-\frac{Rt}{L}}$$

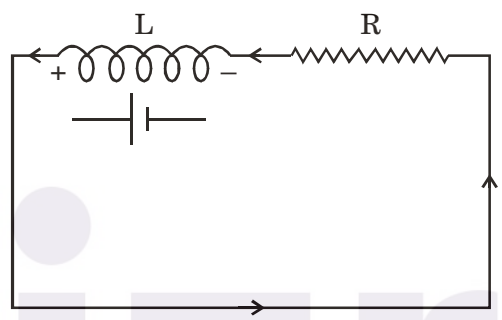

Time constant is also defined as the time is which the current through an inductor would completely vanish, had it been decreasing with initial constant rate.

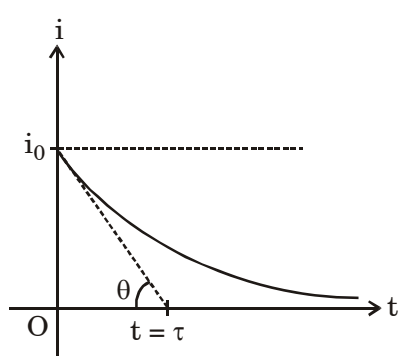

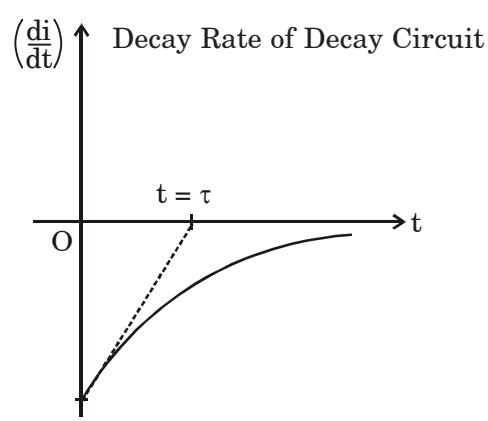

Tip : The time constant for LR circuit can also be found by the equivalent resistance across the terminals of inductor, just like in RC circuits.

13. Analysis of L-R Circuits

L-R circuits can be treated as the converse of RC circuit's analysis.

(i) At $t = 0$

At t = 0, Replace the inductor with an open terminal (only when the current initially is zero). Hence or otherwise use KVL and find the potential drop across the inductor.

Thus, i_0 can be found

Now, to find the $\left|\frac{di}{dt}\right|_{t=0}$, find the potential drop across the terminal of the inductor and use

$$L\left(\frac{di}{dt}\right) = V$$

$$\Rightarrow \quad \boxed{\left(\frac{di}{dt}\right) = \frac{V}{L}}$$

(ii) At steady state :

At steady state, the inductor is replaced by a short-circuit. Use KVL and find the current through the inductor, i_s

(iii) Among four unknown i_0, i_s τ and $\left|\frac{di}{dt}\right|_{t=0}$, find any three and use the relation

$$\boxed{\left|\frac{di}{dt}\right|_{t=0} = \frac{i_s - i_0}{\tau}}$$

Example 21

In the circuit, the switch S is closed at $t = 0$

(i) Find the potential difference across the inductor at time t.

(ii) Current through the battery at any time t.

(iii) When the steady state is reached switch is opened, then find the magnitude and direction of current through the resistor R_1 at time t.

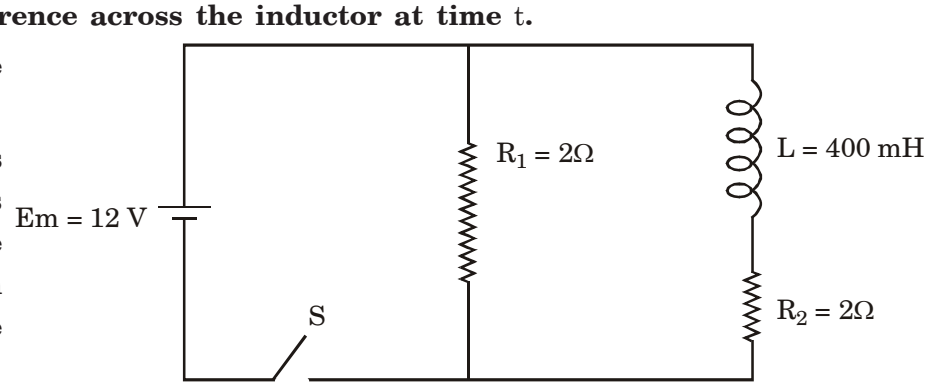

(iv) Heat dissipated in each resistor after opening switch.

Solution :

(i)

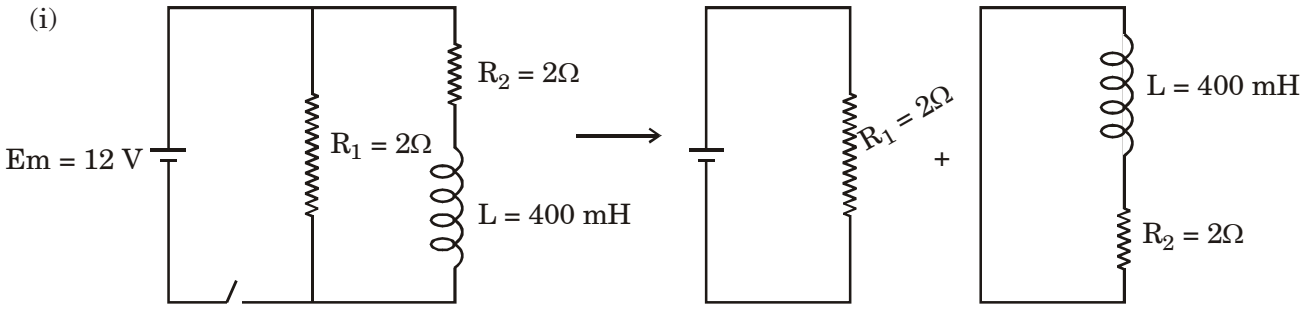

$i_s = 6A,\ i_0 = 0,$

$$\tau = \left(\frac{L}{R}\right) = \left(\frac{400}{2}\right) = 200 \text{ ms} = 0.2\text{s}$$

$$i(t) = 6\left(i - e^{-t/0.2}\right)$$

$i(t) = 6(i - e^{-5t})$

$\therefore$ current through the battery $= 6 + 6\ (1 - e^{-5t})$

(ii) Potential drop across the inductor

$$= L\left(\frac{di}{dt}\right) = 0.4(30)\left(e^{-5t}\right) = \left(12e^{-5t}\right)$$

(iii) After the switch S is opened

$$\tau = \left(\frac{L}{R_{eq}}\right) = \left(\frac{0.4}{4}\right) = 0.1\text{s}$$

$i_s = 0,\ i_0 = 6A$

$$\therefore \quad i(t) = i_0 + (i_s - i_0)\left(1 - e^{-t/\tau}\right)$$

$$= 6 + (-6)\left(1 - e^{\frac{-t}{0.1}}\right)$$

$i(t) = 6e^{-10t} \equiv$ current through resistor R_1

(iv) Heat dissipated in each resistor

Total heat dissipated through resistors

$$= \frac{1}{2} L\, i_{max}^2 = \frac{1}{2} \times 0.4 \times (36) = 7.2 \text{ J}$$

$\therefore \quad R_1 = R_2$

$\Rightarrow$ heat dissipated through each resistor is equal

$= 3.6$ J

Example 22

Find the current through the inductor and the capacitor at any time t**.**

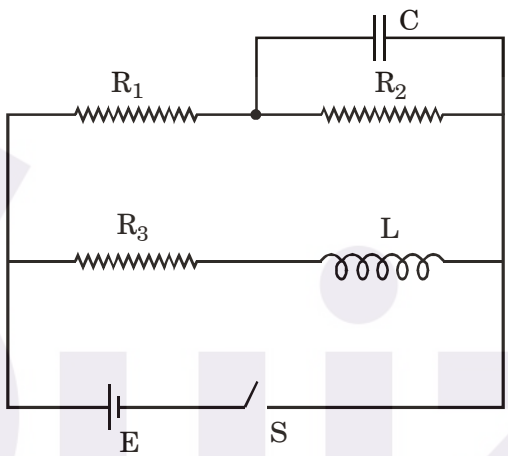

Solution :

The above circuit can be split up in two individual circuits of LR and RC only

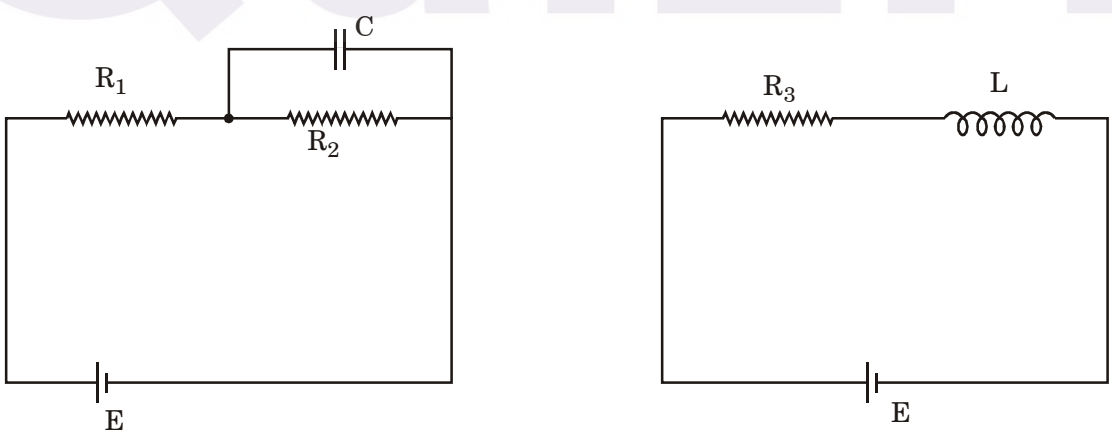

RC Circuit :

$$q_0 = 0,\ q_s = \left[\left(\frac{\in}{R_1 + R_2}\right) R_2\right] C$$

$$i_0 = \left(\frac{\in}{R_1}\right) \qquad \therefore \quad \tau = \left(\frac{R_1 R_2}{R_1 + R_2}\right)C$$

$$\therefore \quad i(t) = \left(\frac{\in}{R_1}\right) e^{-t/\tau}$$

RL Circuit :

$$i_0 = 0,\ i_s = \left(\frac{\in}{R_3}\right),\ \tau = \left(\frac{L}{R_3}\right)$$

$$i(t) = \frac{\in}{R_3}\left(1 - e^{-\frac{R_3 t}{L}}\right)$$

Example 23

In the circuit shown, the switch is swapped from 1 to 2. Then find the current through the battery at time t.

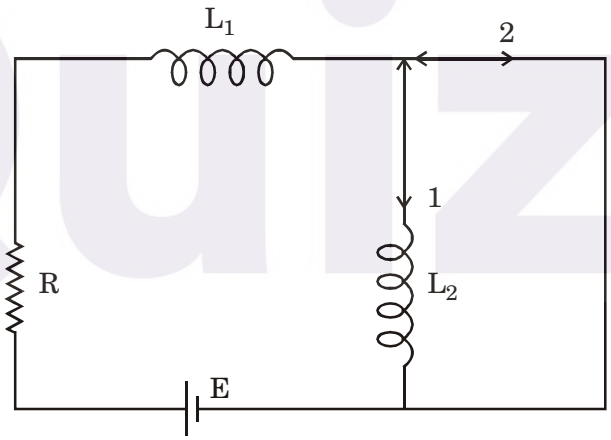

Solution :

During steady state at t = 0, the current in the circuit is, $i = \frac{\in}{R}$. Just as the switch is swapped from 1 to 2, the inductor L_2 gets disconnected from the circuit.

Now, we need to find the initial current through L_1, so for this we apply

Flux Conservation

$$(L_1 + L_2)i = L_1\, i_0$$

$$\therefore \quad i_0 = \left(\frac{L_1 + L_2}{L_1}\right)i = \left(\frac{L_2}{L_1} + 1\right)\frac{\in}{R}$$

Now $i_s = \frac{\in}{R}$

$$\therefore \quad \tau = \frac{L_1}{R} \Rightarrow i(t) = i_0 + (i_s - i_0)\left(1 - e^{-t/\tau}\right)$$

$$= \left(1 + \frac{L_2}{L_1}\right)\frac{\in}{R} - \frac{\in}{R}\left(\frac{L_2}{L_1}\right)\left(1 - e^{-\frac{Rt}{L_1}}\right)$$

$$= \frac{\in}{R}\left[\left(1 + \frac{L_2}{L_1}\right)e^{-\frac{Rt}{L_1}}\right]$$

Example 24

Find the current through each inductor at any time t, after S is closed at t = 0

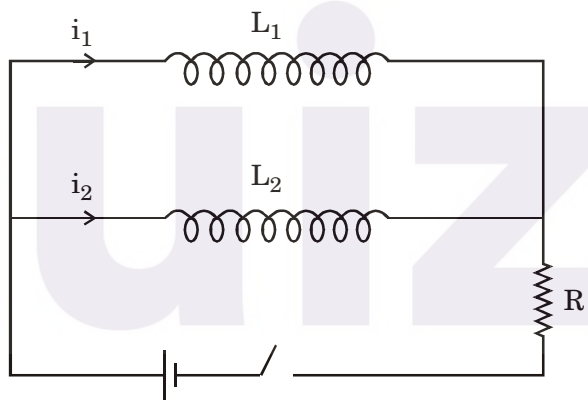

Solution :

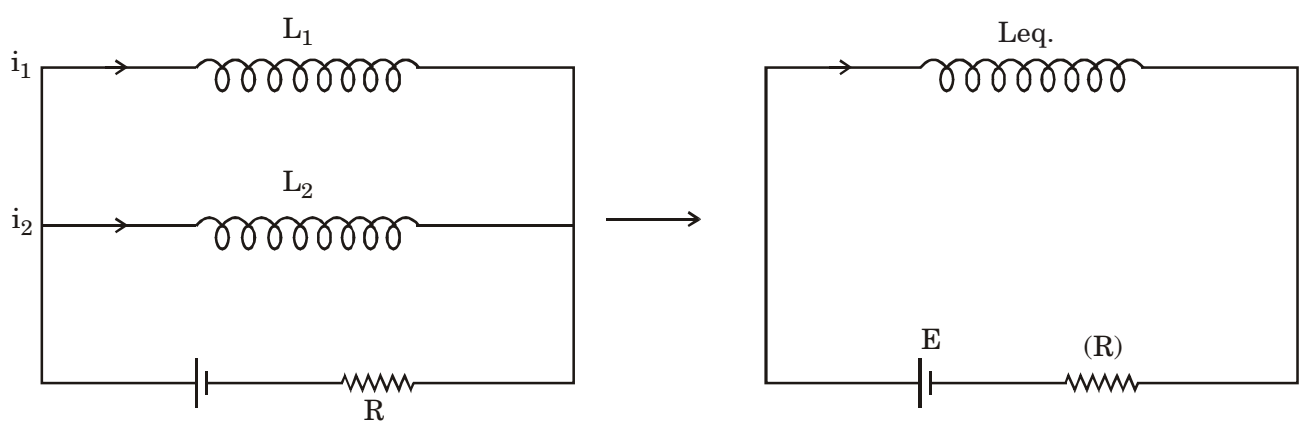

$$L_1\left(\frac{di_1}{dt}\right) = L_2\left(\frac{di_2}{dt}\right) = L_{eq}\left(\frac{di}{dt}\right)$$

$$\therefore \quad i_1 = \left(\frac{L_{eq}}{L_1}\right)i, \qquad i_2 = \left(\frac{L_{eq}}{L_2}\right)i$$

$$\therefore \quad i = (i_1 + i_2)$$

$$i = \frac{\in}{R}\left(1 - e^{-\left(\frac{L_1 + L_2}{L_1\ L_2}\right)Rt}\right)$$

$$i_1 = \frac{L_2}{L_1 + L_2}\left[\frac{\in}{R}\left(1 - e^{-\frac{(L_1 + L_2)Rt}{L_1L_2}}\right)\right]$$

14. Energy stored in an inductor

In an LR circuit, using KVL

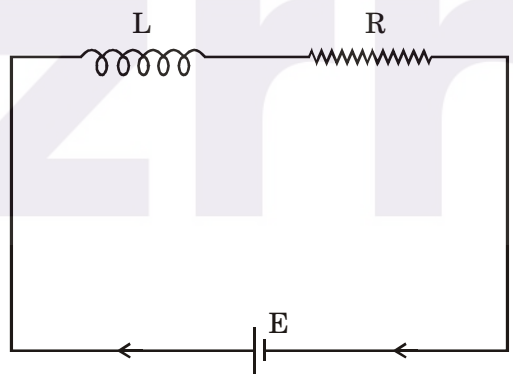

$$\in = L\left(\frac{di}{dt}\right) + iR \quad \text{[Multiply with (idt)]}$$

$$\int \in i\,dt = \int Li\,di + \int i^2\,Rdt$$

$$\Delta W_b = \frac{1}{2}Li^2 + \text{Heat dissipated in resistor}$$

$$\boxed{\therefore \text{ Energy stored in an inductor} = \frac{1}{2}Li^2}$$

Magnetic Energy Density

$$\text{Energy density} = \left(\frac{u}{Al}\right) = \frac{1}{2}\frac{Li^2}{(Al)}$$

$$= \frac{1}{2}\frac{\left(\mu_0\ \pi r_1^2\ n^2\ l\right)i^2}{\pi r_1^2\ l}$$

$$= \frac{1}{2}\left(\mu_0\, n^2\right)i^2$$

$$= \frac{1}{2\mu_0}\left(\mu_0 ni\right)^2 = \left(\frac{1}{2}\frac{B^2}{\mu_0}\right)$$

$$\boxed{\therefore \text{ Energy stored per unit volume in the magnetic field} = \frac{1}{2}\frac{B^2}{\mu_0}}$$

15. LC Oscillations

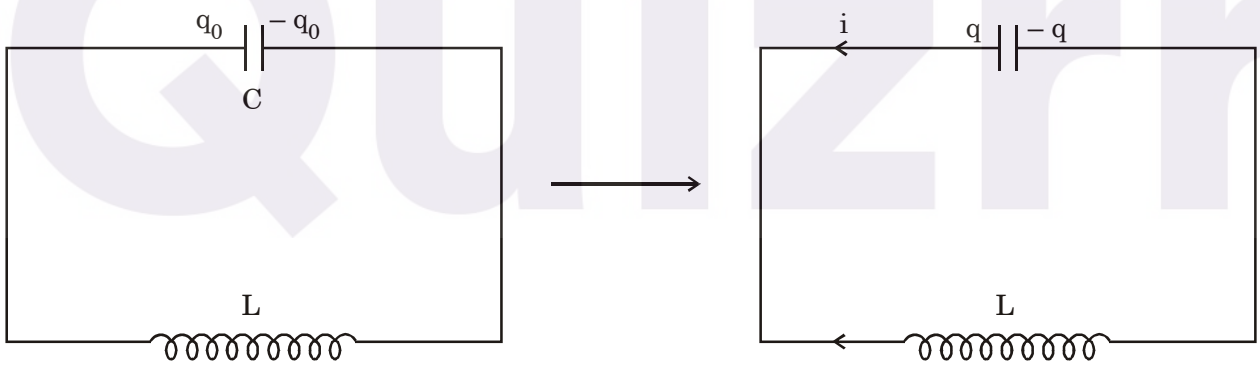

(At t = 0)

$i = \left(\frac{dq}{dt}\right)$

At any time t,

$$\left(\frac{q}{C}\right) = L\left(\frac{di}{dt}\right) = -L\left(\frac{d^2q}{dt^2}\right)$$

$$\boxed{\left(\frac{d^2q}{dt^2}\right) = -\left(\frac{q}{LC}\right)}$$

$$\omega = \frac{1}{\sqrt{LC}}, \quad T = 2\pi\sqrt{LC}$$

Solution of above differential equation

$$q(t) = A \sin(\omega t + \alpha)$$

To find A and α,

$$q(0)\ A \sin \alpha = q_0$$

$$i(t) = \omega A \cos(\omega t + \alpha)$$

$$i(0) = \omega A \cos \alpha = 0$$

$$\Rightarrow \quad \cos \alpha = 0, \ \alpha = \frac{\pi}{2}, \frac{3\pi}{2} \qquad \therefore \ \left(\alpha = \frac{\pi}{2}\right) \qquad \therefore \ q > 0$$

$$\therefore \quad \boxed{q(t) = A \sin\left(\omega t + \frac{\pi}{2}\right) = q_0 \cos \omega t}$$

$$i(t) = -\omega q_0 \sin \omega t$$

$$= \omega q_0 \cos\left(\omega t + \frac{\pi}{2}\right)$$

$\therefore$ Current leads the voltage across the capacitor

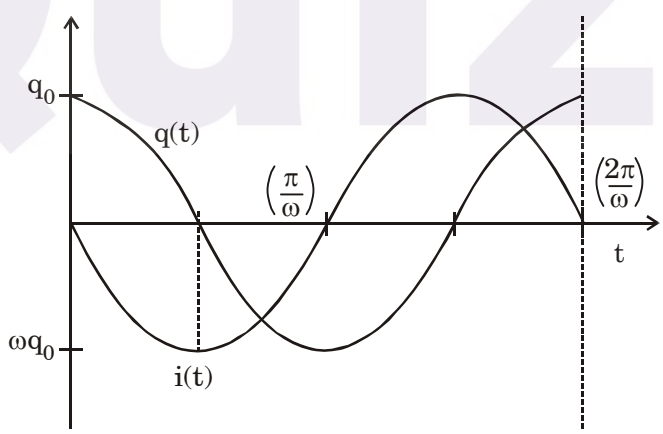

Another important concept to be kept in mind is that the sum of energy stored across capacitor and the inductor is constant in ideal LC oscillation.

$$\boxed{\left(\frac{q^2}{2C}\right) + \frac{1}{2}Li^2 = \text{const.} = \frac{1}{2}Li_{max}^2 = \frac{1}{2}\left(\frac{q_0^2}{C}\right)}$$

Example 25

If the initial charge on the capacitor is 200 μC then find the current and $\left|\frac{di}{dt}\right|$ at a time when q = 100 μC.

Solution :

To solve question on LC oscillation, it is always easier to use energy conservation.

$$\boxed{\frac{1}{2}Li^2 + \frac{1}{2}\left(\frac{q^2}{C}\right) = \frac{1}{2}\left(\frac{q_0^2}{C}\right)}$$

$\therefore$ At q = 100 μC

$$\frac{1}{2}Li^2 + \frac{1}{2}\frac{(100)^2}{C} = \frac{1}{2}\frac{(200)^2}{C}$$

To find $\left(\frac{di}{dt}\right)$, just differentiate the above equation.

$$iL\left(\frac{di}{dt}\right) + \left(\frac{q}{C}\right)i = 0$$

$$L\left(\frac{di}{dt}\right) = \left(\frac{q}{C}\right)$$

$$\therefore \quad \left(\frac{di}{dt}\right) = \left(\frac{q}{LC}\right)$$

Example 26

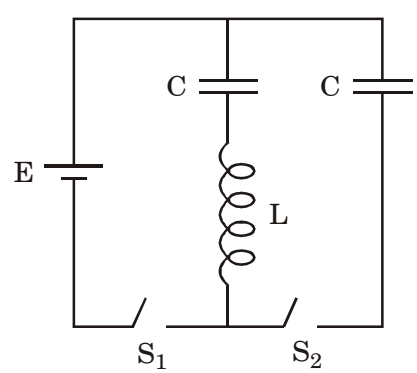

Initially, the capacitors are uncharged.

At t = 0, S_1 is closed, but S_2 remains open. At $t = \frac{\pi}{2}\sqrt{LC}$, S_1 is opened and simultaneously S_2 is closed.

(a) Find the charge on the capacitor and the current in the inductor at $t = \frac{\pi}{2}\sqrt{LC}$ just before opening S_1.

(b) Then, find the maximum current in the inductor after closing S_2.

Solution :

When the switch S_1 is closed at t = 0

At any time t, let the current through the circuit be i, apply KVL

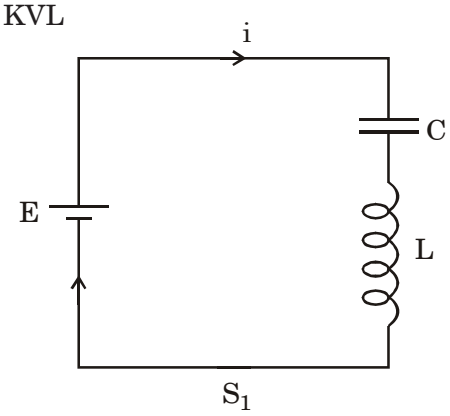

(At any time t)

$$\left(\frac{q}{c}\right) + L\left(\frac{di}{dt}\right) = \in$$

Differentiate wrt time, $\left(\frac{i}{C}\right) + L\left(\frac{d^2i}{dt^2}\right) = 0$

$$\boxed{\left(\frac{d^2i}{dt^2}\right) = -\left(\frac{i}{LC}\right)} \qquad \omega = \sqrt{\left(\frac{1}{LC}\right)}$$

Soln. of this 2nd order DE : $i(t) = A \sin(\omega t + \alpha)$

To find A and α,

At t = 0

$i(0) = 0 \quad \Rightarrow \quad A \sin \alpha = 0, \quad \Rightarrow \quad \alpha = 0, \pi$

$\frac{d_i}{dt}(0) = \left(\frac{\in}{L}\right) \quad \Rightarrow \quad A\,\omega\,(\cos\alpha) = \left(\frac{\in}{L}\right)$

$A = \left(\frac{\in}{\omega L}\right) \qquad \alpha = 0$

$$\boxed{\therefore \quad i(t) = \left(\frac{\in}{\omega L}\right)\sin(\omega t)}$$

Integrate to get the function of time t,

$$q(t) = \left(\frac{\in}{\omega L}\right)\left(\frac{1}{\omega}\right)\left|-\cos \omega t\right|_0^t = \left(\frac{\in}{\omega^2 L}\right)(1 - \cos\omega t)$$

$$\therefore \quad q(t) = \frac{\in}{\omega^2 L}(1 - \cos\omega t) = \frac{\in(LC)}{L}(1 - \cos\omega t) \qquad \left[\omega = \frac{1}{\sqrt{LC}}\right]$$

$\therefore \quad q(t) = CE(1 - \cos \omega t)$

$$i(t) = \left(\frac{CE}{\sqrt{LC}}\right)(\sin\omega t)$$

Now, at $t = \left(\frac{\pi}{2}\right)\sqrt{LC}$, S_1 is opened and S_2 is closed.

$$q\left(\frac{\pi}{2}\sqrt{LC}\right) = CE, \qquad i\left(\frac{\pi}{2}\sqrt{LC}\right) = \frac{CE}{\sqrt{LC}}$$

which the charge and current through the capacitor and the inductor just before opening S_1.

(b) To find the maximum current through the inductor.

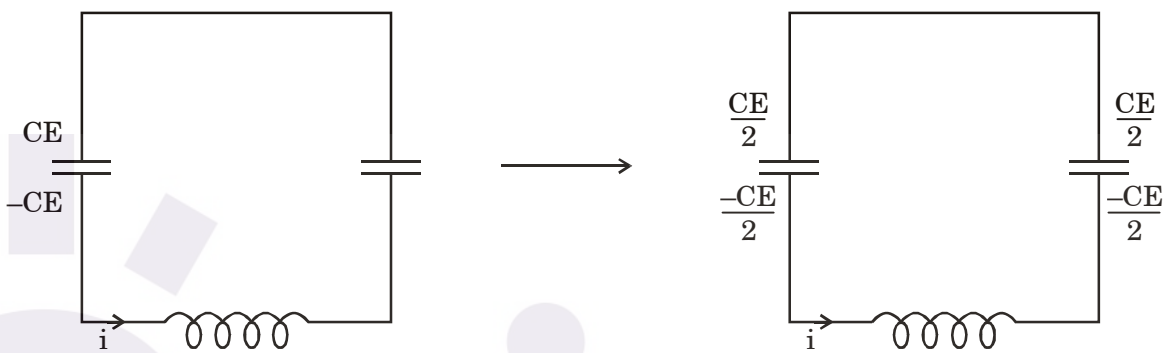

At $t = \frac{\pi}{2}\sqrt{LC}$

At i_{max}, inductor is short circuited. Charges on individual capacitor are as shown due to parallel combination.

Apply energy conservation

$$\frac{1}{2}Li_{max}^2 + 2 \times \left(\frac{1}{2}C\frac{E^2}{4}\right) = \text{Initial energy before closing } S_2$$

$$= \frac{1}{2}\left(\frac{C^2E^2}{C}\right) + \frac{1}{2}L\left(\frac{C^2E^2}{LC}\right) = CE^2$$

$$\Rightarrow \frac{1}{2}Li_{max}^2 = \left(\frac{3CE^2}{4}\right)$$

$$i_{max} = \sqrt{\frac{3CE^2}{2L}} = E\sqrt{\frac{3C}{2L}}$$

MISCELLANEOUS EXAMPLES

Example 1

In the arrangement shown, the straight connector is displaced towards right by x_0 **and then released. Then, find**

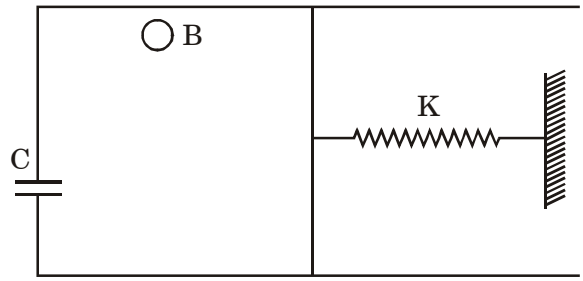

(a) the time period of oscillation of the connector,

(b) the maximum velocity of the connector and

(c) the maximum charge on the capacitor

Solution :

Consider at any instant when the wire is at a distance x from its mean position

Charge on the capacitor

$$q = CE = C(Bvl)$$

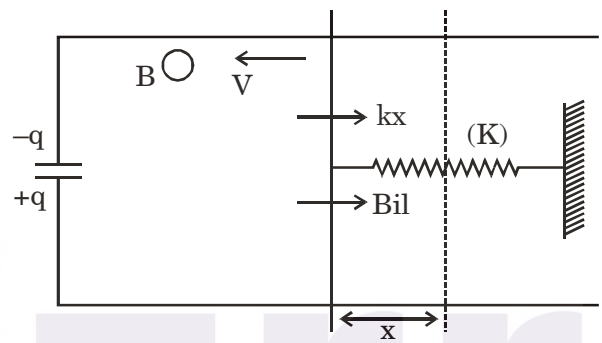

Differentiate wrt time

$$\boxed{i = CBl\left(\frac{dv}{dt}\right)} \qquad ...(1)$$

Now, write the force eqn.

$$-m\left(\frac{dv}{dt}\right) = Kx + Bil \qquad ...(2)$$

$$m\left(\frac{dv}{dt}\right) = -\left[Kx + B\left(CBl\frac{dv}{dt}\right)l\right]$$

$$\left(\frac{dv}{dt}\right)\left[m + CB^2l^2\right] = -Kx$$

$$\frac{dv}{dt}\left(m + B^2l^2C\right) = -Kx$$

$$\boxed{\therefore \left(\frac{d^2x}{dt^2}\right) = \frac{-Kx}{\left(m + CB^2l^2\right)}} \qquad \omega = \sqrt{\left(\frac{K}{m + CB^2l^2}\right)}$$

(a) Time period of oscillation

$$= \left(\frac{2\pi}{\omega}\right) = 2\pi\sqrt{\frac{m + CB^2l^2}{K}}$$

(b) Solution of the above DE is given by

$x(t) = x_0 \sin(\omega t)$

$v(t) = (\omega x_0) \cos(\omega t)$

$\therefore$ Maximum velocity acquired by the connector

$$= (\omega x_0) = x_0 \sqrt{\frac{K}{m + CB^2 l^2}}$$

(c) Maximum charge stored on the capacitor

$q = CE_{max}$

$= C(Bv_{max}\, l)$

$$= (CBl)\left(x_0 \sqrt{\frac{K}{m + CB^2 l^2}}\right)$$

Example 2

In the arrangement shown, the connector starts sliding along two parallel smooth inclined rails connecting with an uncharged capacitor. Find

(a) the velocity of the connector when it reaches the bottom of the parallel rails.

(b) Time required to reach the bottom of the incline.

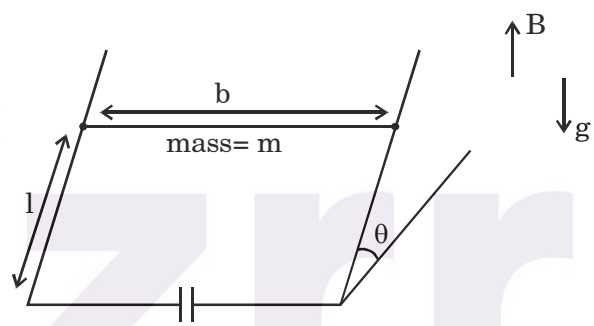

Solution :

– First of all, find the comp. of $\vec{B}$ field in plane of the incline which is B sin v and B cos θ (⊥r to plane)

Only perpendicular comp. of B field induces emf

– Current flows in the circuit due to motional emf. Hence, consider any general time t, when the current in the circuit is i and charge on the capacitor is q.

$q = CE = C(Bvl)$

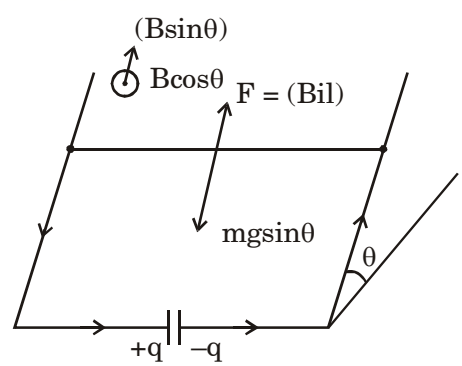

$$i = \left(\frac{dq}{dt}\right) = CBl\left(\frac{dv}{dt}\right) = C(B\cos\theta)\, l\left(\frac{dv}{dt}\right)$$

Now, write the force eqn. for the conductor, $m\left(\frac{dv}{dt}\right) = mg\sin\theta - (iBl)$

Note : Emf is induced due to perpendicular comp. of $\vec{B}$ field to plane.

$$m\left(\frac{dv}{dt}\right) = mg\sin\theta - B(x\cos\theta)(B\cos\theta\, lC)\cos\theta\, l\left(\frac{dv}{dt}\right)$$

$$m\left(\frac{dv}{dt}\right) = mg\sin\theta - \left(B^2l^2\ C\cos^2\theta\right)\left(\frac{dv}{dt}\right)$$

$\therefore$ $a\left[m + B^2l^2C\cos^2\theta\right] = mg\sin\theta$

$$\boxed{a = \frac{mg\sin\theta}{m + B^2l^2C\cos^2\theta}}$$

$\therefore$ To find the velocity, when the conductor reaches the bottom, use

(a) $v^2 = 2al$

$$\therefore \quad v = \sqrt{\frac{2\ mg\sin\theta\ l}{m + B^2l^2C\cos^2\theta}}$$

(b) To find the required time, $\frac{1}{2}at^2 = l$

$$\therefore \quad t = \left(\frac{2l}{a}\right)$$

Example 3

In the previous question, find the velocity and the time when the rails are not smooth. (take friction coeff. = μ)

Solution :

In this case, we need to just consider the friction force also in the force eqn.

$N = mg\cos\theta + (B\sin\theta)\ i\ l$

$\therefore$ $f_k = \mu N = \mu[mg\cos\theta + (B\sin\theta)\ i\ l]$

$$m\left(\frac{dv}{dt}\right) = mg\sin\theta - \mu\, mg\cos\theta - \mu\, B\sin\theta\, il - (B\cos\theta)il$$

$ma = mg(\sin\theta - \mu\cos\theta) - (\mu\sin\theta) + \cos\theta)\ B\ l\ i$

$a\ [m + (\mu\sin\theta + \cos\theta)\ B\ l\ (CB\ l\cos\theta)] = mg(\sin\theta - \mu\cos\theta)$

$$\therefore \quad a = \frac{mg\left(\sin\theta - \mu\cos\theta\right)}{\left[m + \left(\mu\sin\theta + \cos\theta\right)B^2 l^2\ C\cos\theta\right]}$$

Now, velocity when it reaches the bottom can be obtained by

$$v = \sqrt{2al} \quad \text{and} \quad \text{time } t = \sqrt{\frac{2l}{a}}$$

Example 4

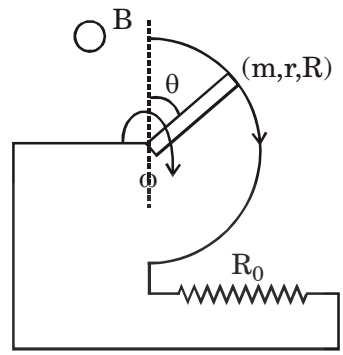

In the arrangement shown, the connector rod of mass m, length r and and resistance R, is rotating in a horizontal plane about 0 semi circular rail of radius r. An initial velocity of w_0 was imparted at t = 0 Find

(a) the angular velocity of the rod as the function of time t and angular displacement (θ)

(b) the current through the resistance as a function of time t.

Solution :

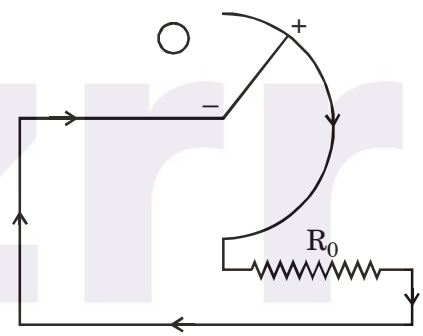

Due to induced emf, a current flows in the circuit.

The current flowing in the circuit also causes the retardation torque is the rod.

$$i = \frac{(\text{induced emf})}{\text{resistance}} = \frac{B\omega r^2}{2(R + R_0)}$$

Magnetic torque experienced by the rod

$$\tau_B = \int_0^r (Bi\,dx)\,x = \left(\frac{Bi\ r^2}{2}\right)$$

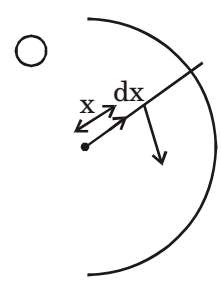

Write the torque eqn. on the rod

$$\left(\frac{mr^2}{3}\right)\alpha = -\tau_B = -\left(\frac{Bi\,r^2}{2}\right) = \frac{-B^2r^4}{4(R + R_0)}\omega$$

To find w (θ)

$$\left(\frac{mr^2}{3}\right)\omega\left(\frac{d\omega}{d\theta}\right) = \frac{-B^2r^4}{4(R + R_0)}\omega$$

$$\int_{\omega_0}^{\omega} d\omega = \frac{-3B^2r^2}{4m(R + R_0)}\int_0^{\theta} d\theta$$

$$(\omega_0 - \omega) = \frac{3B^2r^2\theta}{4m(R+R_0)}$$

$$\therefore \quad \omega = \omega_0 - \frac{3B^2r^2\theta}{4m(R+R_0)}$$

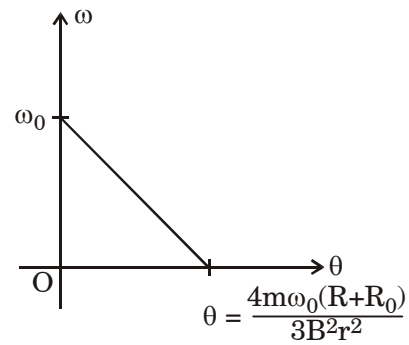

To find $\omega(t)$, $\left(\frac{mr^2}{3}\right)\left(\frac{d\omega}{dt}\right) = \frac{-B^2r^4\omega}{4(R+R_0)}$

$$\int_{\omega_0}^{\omega}\left(\frac{d\omega}{\omega}\right) = \frac{-3B^2}{4m(R+R_0)}\int_0^t dt$$

$$\ln\left(\frac{\omega}{\omega_0}\right) = \frac{-3B^2t}{4m(R+R_0)}$$

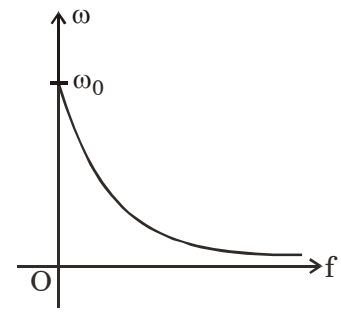

$$\boxed{\therefore \quad \omega = \omega_0\, e^{\frac{-3B^2t}{4m(R+R_0)}}}$$

(b) Current through resistance as a function of time t can be obtained as

$$i = \frac{Br^2}{2(R+R_0)}\left[\omega_0\, e^{\frac{-3B^2t}{4m(R+R_0)}}\right]$$

Example 5

At t = 0 the switch S is closed. Find

(i) the current through the inductor at time t.

(ii) when the steady state is reached, find the torque required to rotate with const. ω.

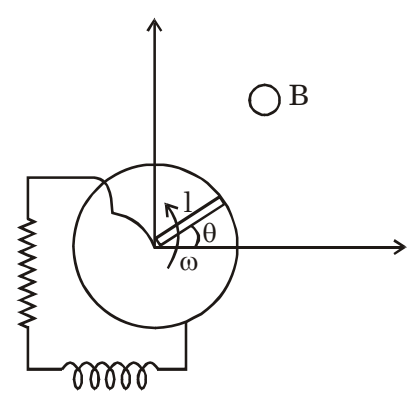

Solution :

Since the rod is already rotating with const ω,

Emf induced across its ends = $\left(\frac{B\omega l^2}{2}\right)$

Now, this reduces to a simple L-R circuit question

$$i(t) = \frac{\in}{R}\left(1 - e^{-\frac{R}{L}t}\right)$$

(i) $$i(t) = \left(\frac{B\omega l^2}{2R}\right)\left[1 - e^{-\left(\frac{R}{L}\right)t}\right]$$

(ii) after the steady state is reached, the current through the inductor becomes constant. Hence, due to this a constant magnetic torque is clockwise direction is created.

To keeping rotating rod with constants, an anti-clockwise torque must be applied to balance ωt and τ_B.

$$\tau_{req.} = mg\frac{l}{2}\cos wt + \frac{Bil^2}{2}$$

$$= mg\frac{l}{2}\cos \omega t + \frac{B^2\omega l^4}{4R}$$

Example 6

In the circuit shown a straight conductor of mass, length and resistance m, l **and R can smoothly move along two parallel conducting rails. Now, the switch is closed at time** t **= 0, Then find the charge on capacitor and the velocity of the conductor at any time** t**.**

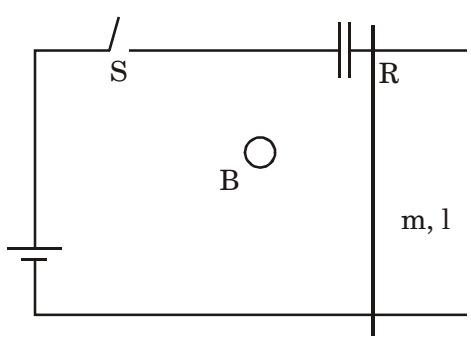

Solution :

At any instant, let the current through the circuit be i.

Apply KVL,

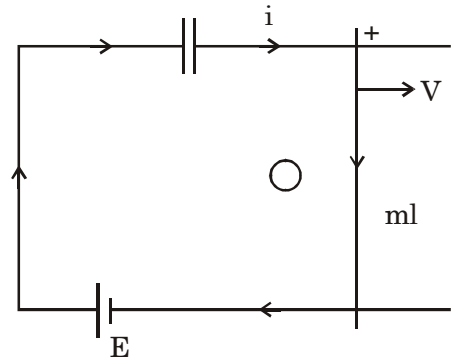

$$\left(\frac{q}{C}\right) + iR + (Bvl) = \in \qquad ...(1)$$

Write the force eqn. for the conductor

$$m\left(\frac{dv}{dt}\right) = (Bil) \qquad ...(2)$$

$$m\int_0^t dv = \int_0^t Bil\, dt$$

$\Rightarrow \quad mv = Blq$

$$\therefore \quad v = \left(\frac{Blq}{m}\right) \qquad ...(3)$$

Substitute (3) in (1),

$$\left(\frac{q}{C}\right) + \left(\frac{dq}{dt}\right)R + \frac{B^2l^2q}{m} = \in$$

$$\left(\frac{dq}{dt}\right) = \frac{\in}{R} - \frac{1}{R}\left(\frac{B^2l^2}{m} + \frac{1}{C}\right)q$$

Let $\left(\frac{dq}{dt}\right) = (a - bq)$

$$\int_0^{q(t)} \left(\frac{dq}{a - bq}\right) = \int_0^t dt$$

$$\therefore \quad q(t) = \left(\frac{a}{b}\right)\left(1 - e^{-bt}\right)$$

$$\therefore \quad q(t) = \frac{\in}{\left(\frac{B^2l^2}{m} + \frac{1}{C}\right)} \cdot \left[1 - e^{\frac{1}{R}\left(\frac{B^2l^2}{m} + \frac{1}{C}\right)t}\right]$$

$\therefore$ maximum charge on the capacitor = $\dfrac{mCE}{\left(B^2l^2C + m\right)}$

Velocity of the conductor

$$v = \left(\frac{Bl}{m}\right)q = \frac{Bl}{m}\frac{(mCE)}{\left(CB^2l^2 + m\right)}\left[1 - e^{-\frac{1}{R}\left(\frac{B^2l^2}{m} + \frac{1}{C}\right)t}\right]$$

Example 7

The system is released from rest at t = 0. Find the velocity of the connector as a function of displacement x, from the initial position.

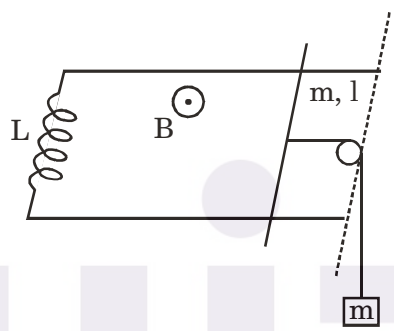

Solution :

Now, when the system is released from rest, the mass m fall freely and the rod, acquires a velocity v which induces an emf in the circuit

$$L\left(\frac{di}{dt}\right) = Bvl \qquad ...(1)$$

Write the force eqn.

$$a = \left(\frac{dv}{dt}\right) = \left(\frac{mg - Bil}{2m}\right) = \left(\frac{g}{2}\right) - \left(\frac{Bil}{2m}\right) \qquad ...(2)$$

Integrate the eqn. (1)

$$L\int di = Bl\int vdt \quad \Rightarrow \quad Li = Blx$$

$$\therefore \quad i = \left(\frac{Bl}{L}\right)x$$

$$v\left(\frac{dv}{dx}\right)=\left(\frac{g}{2}\right)-\left(\frac{B^2l^2}{2mL}\right)x$$

$$\int_0^v v\,dv=\frac{g}{2}\int_0^x dx-\frac{B^2l^2}{2mL}\int_0^x x\,dx$$

$$\left(\frac{v^2}{2}\right)=\frac{gx}{2}-\frac{B^2l^2}{2mL}\left(\frac{x^2}{2}\right)$$

$$\boxed{\therefore \quad v=\sqrt{gx-\left(\frac{B^2l^2}{2mL}\right)x^2}}$$

To find the relation b/w the time and displacement

$$\left(\frac{dx}{dt}\right)=\sqrt{gx-\left(\frac{B^2l^2}{2mL}\right)x}$$

$$\int\frac{dx}{\sqrt{gx-\left(\frac{B^2l^2}{2mL}\right)x}}=\int dt \quad , \qquad \text{integrate to get answer}$$

Alternate way of solving

$$L\left(\frac{di}{dt}\right)=Bvl, \quad \left(\frac{dv}{dt}\right)=\left(\frac{g}{2}\right)-\left(\frac{B\,il}{2m}\right)$$

Differentiate eqn. (2) again with time

$$\left(\frac{d^2v}{dt^2}\right)=-\left(\frac{Bl}{2m}\right)\left(\frac{di}{dt}\right)$$

$$\Rightarrow \quad -L\left(\frac{di}{dt}\right)=\left(\frac{2m}{Bl}\right)\left(\frac{d^2v}{dt^2}\right)\times L$$

$$\Rightarrow \quad \boxed{\left(\frac{d^2v}{dt^2}\right)=\frac{-B^2l^2}{2mL}v}$$

Solution of this 2nd order DE is very familiar,

$$v(t) = A \sin(\omega t + \alpha) \qquad \omega = \sqrt{\frac{B^2 l^2}{2mL}}$$

To find A and α,

At t = 0

$v(0) = 0, \qquad \Rightarrow \qquad \alpha = 0, \pi$

At t = 0

$$a(0) = \left(\frac{g}{2}\right) \qquad \Rightarrow \qquad \left(\frac{g}{2}\right) = \omega A \cos\alpha$$

$$\therefore \qquad A = \left(\frac{g}{2\omega}\right), \alpha = 0$$

$\therefore$ the required function of v with time

$$v(t) = \frac{g}{2}\sqrt{\frac{2mL}{B^2 l^2}}(\sin \omega t)$$

Example 8

In the steady state, the power dissipated across each resistor is P_1 and P_2. Find the velocity of the rod as a function of time t. Hence, find the terminal velocity acquired.

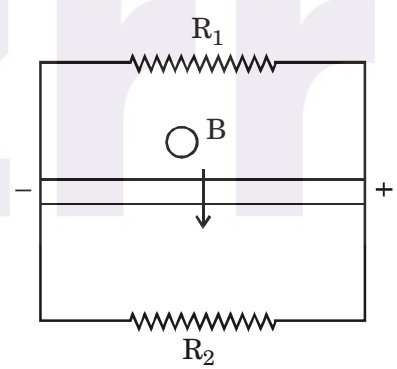

Solution :

$$m\left(\frac{dv}{dt}\right) = mg - Bil \qquad ...(1)$$

$$i = \left(\frac{\text{induced emf}}{\text{resistor}}\right) = Bvl\left(\frac{1}{R_1} + \frac{1}{R_2}\right) \qquad ...(2)$$

$$\left(\frac{dv}{dt}\right) = g - \frac{B^2 l^2}{m(R_{eq})}v$$

$$v(t) = \frac{mg\left(R_{eq}\right)}{B^2l^2}\left(1 - e^{\frac{-B^2l^2}{mR_{eq}}t}\right)$$

Now, terminal velocity = $\dfrac{mg\left(R_{eq}\right)}{B^2l^2}$

Now, since the resistors are in parallel

$$\frac{(Bvl)^2}{R_1} = P_1 \text{ and } \frac{(Bvl)^2}{R_2} = P_2$$

$$\therefore \quad \left(\frac{1}{R_{eq}}\right) = \frac{(P_1 + P_2)}{(Bvl)^2}$$

$$\therefore \quad V_t = \frac{mg}{B^2l^2}\left(\frac{B^2l^2v_t^2}{P_1 + P_2}\right) \qquad \therefore \quad v_t = \frac{(P_1 + P_2)}{mg}$$

Alternative method to find only terminal velocity

In the steady state,

(Bil = mg) [Balancing forces ∴ v is const]

Energy conservation $\varepsilon i = (P_1 + P_2)$

$$\therefore \quad Bvl\left(\frac{mg}{Bl}\right) = P_1 + P_2$$

$$\therefore \quad v = \frac{(P_1 + P_2)}{mg}$$

Example 9

A frame of wire (EFGH) falls freely under gravity in a region where $\vec{B}$ field varies as $\vec{B} = \left(\frac{B_0 y}{a}\right)\tilde{k}$

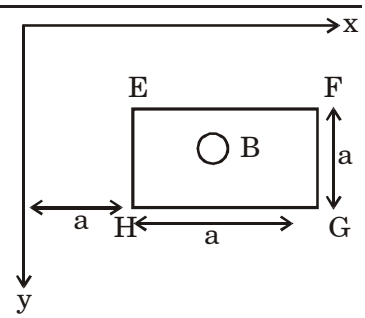

Find

(i) the induced current in the loop at time t.

(ii) the total ampere force acting on the loop

(iii) the velocity of the loop as a function of time t. v (t) **= ?**

the resistance of loop is R.

Solution :

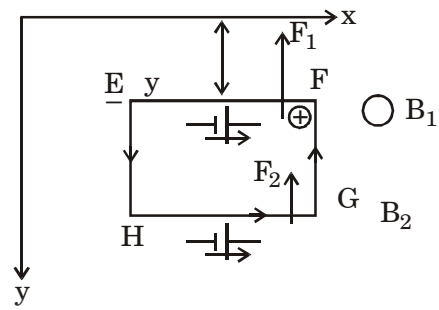

Note that no emf is induced along the lengths EH and FG.

Net induced emf in the loop

$= (B_2va - B_1va)$

$= (B_2 - B_1)\ va$

$$= \left[\frac{B_0}{a}(y+a) - \frac{B_0 y}{a}\right] va = B_0\ va$$

(b) Current in the loop $= \left(\frac{B_0\ va}{R}\right)$

Net force acting on EH and FG is zero.

$= (F_2 - F_1)$

$= (B_2il) - (B_1il) = (B_2 - B_1)\ il$

$$= (B_0)\left(\frac{B_0va}{R}\right)a = \left(\frac{B_0^2\ a^2}{R}\right)v$$

(c) $$m\left(\frac{dv}{dt}\right) = mg - \left(\frac{B^2a^2}{R}\right)v$$

$$\int_0^v \frac{dv}{g - \left(\frac{B^2a^2}{mR}\right)v} = \int_0^t dt$$

$$v(t) = \frac{gmR}{B_0^2a^2}\left[1 - e^{-\left(\frac{B^2a^2}{mR}\right)t}\right]$$

Alternative method (using energy conservation) :

$$-\left(\frac{du}{dt}\right) = \left(\frac{dK}{dt}\right) + i^2R$$

$$(mgv) = mv\left(\frac{dv}{dt}\right) + \left(\frac{B^2v^2l^2}{R}\right)$$

$$\left(\frac{dv}{dt}\right) = g - \left(\frac{B^2va^2}{mR}\right)$$

$$\therefore \quad \int_0^v \frac{dv}{g - \left(\frac{B^2a^2}{mR}\right)v} = \int_0^t dt$$

$$v(t) = \left(\frac{gmR}{B_0^2a^2}\right)\left[1 - e^{-\left(\frac{B^2a^2}{mR}\right)t}\right]$$

Example 10

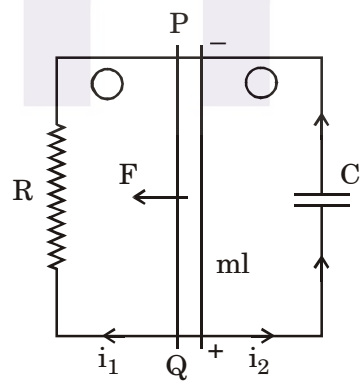

A rod of mass m and length l is dragged with constant force along two parallel rails (smooth). Find

(i) **the velocity of connector as a function of time** t

(ii) i (t) **= ? through resistor**

(iii) q (t) **= ? on capacitor**

Solution :

Induced emf = (Bvl)

$i = (i_1 + i_2)$ ...(1)

$i_1 = \left(\frac{Bvl}{R}\right)$ ...(2)

$\therefore \quad i_2 = CB\left(\frac{dv}{dt}\right)l$ ...(3)

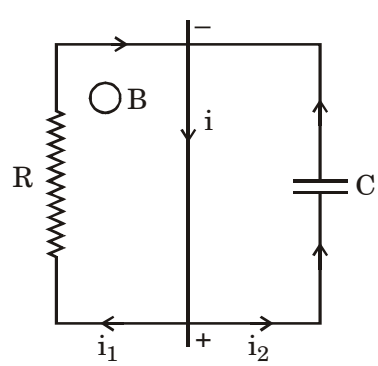

Write the force eqn.

$$F - (Bil) = m\left(\frac{dv}{dt}\right)$$

$$m\left(\frac{dv}{dt}\right) = F - Bl\,(i_1 + i_2) = F - Bl\left[\frac{Bvl}{R} + CB\left(\frac{dv}{dt}\right)l\right]$$

$$m\left(\frac{dv}{dt}\right) = F - B^2l^2\left[\frac{v}{R} + C\left(\frac{dv}{dt}\right)\right]$$

$$\left(\frac{dv}{dt}\right)\left[m + B^2l^2C\right] = F - \left(\frac{B^2l^2v}{R}\right)$$

$$\int_0^v \frac{dv}{F - \left(\frac{B^2l^2v}{R}\right)} = \int_0^t \frac{dt}{\left(m + B^2l^2C\right)}$$

(i) $$v(t) = \frac{FR}{B^2l^2v}\left[1 - e^{-\frac{B^2l^2v\,t}{R\left(m + B^2l^2C\right)}}\right]$$

(ii) Hence, current through resistor = $\left(\frac{Bl}{R}\right)v(t)$

(iii) Charge on the capacitor = (Bl) v(t)

Alternative method (using energy conservation)

$$(F.v) = \left(\frac{dK}{dt}\right) + i^2R + \frac{d}{dt}\left(\frac{q^2}{2C}\right)$$

$$(Fv) = mv\left(\frac{dv}{dt}\right) + \left(\frac{Blv}{R}\right)^2 R + \left(\frac{q}{C}\right)\left[lBl\left(\frac{dv}{dt}\right)\right]$$

$$Fv = mv\left(\frac{dv}{dt}\right) + \left(\frac{B^2l^2}{R}\right)v^2 + CB^2l^2v\left(\frac{dv}{dt}\right)$$

$$F - \left(\frac{B^2l^2}{R}\right)v = \left(m + CB^2l^2\right)\left(\frac{dv}{dt}\right)$$

$$\int \frac{dv}{F - \left(\frac{B^2l^2}{R}\right)v} = \int \frac{dt}{\left(m + CB^2l^2\right)}$$ $\Rightarrow$ Integrate to get same result.

Example 11

A simple pendulum consists of a small conducting ball of mass m and a light conducting rod of length l. The pendulum oscillates with angular amplitude θ_0 in a vertical plane about a horizontal axis passing through O such that the ball remains always just in contact with a metallic strip AD bent into a circular arc of radius l as shown in figure. In the space, a uniform magnetic field of induction B normal to plane of oscillation exists in the space. At time t = 0 when the ball is at its lowest position and moving towards right, the switch S is closed. Neglecting self inductance of the circuit calculate external torque τ required to keep the pendulum oscillating as before. Assume that θ_0 is small.

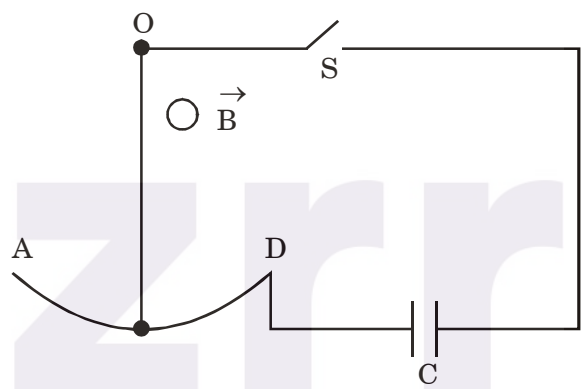

Solution :

At time t = angular position of the rod is, $\theta = \theta_0 \sin\left(\frac{2\pi}{T}\right)t$ ...(i)

Here $T = 2\pi\sqrt{\frac{l}{g}}$

Differentiating Eq. (i) w.r.t. time, the angular speed of the rod at this instant is,

$$\omega = \frac{d\theta}{dt} = \left(\frac{2\pi\theta_0}{T}\right)\cos\left(\frac{2\pi t}{T}\right)$$

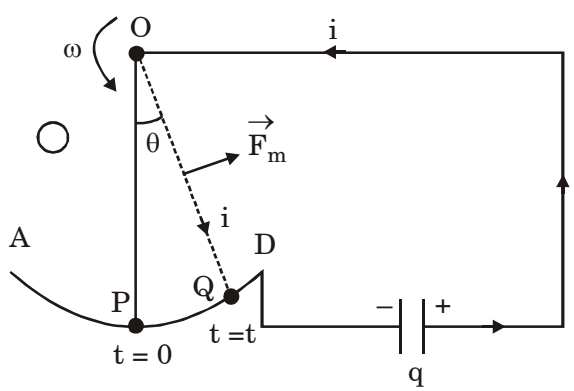

The P.D. between the ends of the rod at this instant is,

$$V_o - V_Q = V = \frac{1}{2}B\omega l^2$$

$$= \left(\frac{\pi\theta_0 l^2 B}{T}\right)\cos\left(\frac{2\pi t}{T}\right)$$

From right hand rule we can see that $V_0 - V_Q$. This is also the P.D across the capacitor. Hence, charge stored in the capacitor at this instant is,

$$q = CV = \left(\frac{\pi\theta_0 l^2 CB}{T}\right)\cos\left(\frac{2\pi t}{T}\right)$$

As the rod move towards D, its ω decreases. Hence, q will decrease. Thus, current in the circuit is anticlockwise. This current is given by

$$i = -\frac{dq}{dt} = \left(\frac{2B\pi^2\theta_0 l^2 C}{T^2}\right)\sin\left(\frac{2\pi t}{T}\right)$$

In the rod it points from O to Q. Magnetic force on the rod due to this current is,

$$F_m = ilB = \left(\frac{2\pi^2\theta_0 B^2 l^3 C}{T^2}\right)\sin\left(\frac{2\pi t}{T}\right)$$

This force acts on the rod in the direction shown in figure at the centre of the rod and perpendicular to it. Hence anticlockwise torque due to this force about point O is,

$$\tau = (F_m)\frac{l}{2} = \frac{\pi^2\theta_0 B^2 l^4 C}{T^2}\sin\left(\frac{2\pi t}{T}\right)$$

So we will have to apply, this much torque in clockwise directions, to keep the rod rotating as before.

Thus, $$\tau_{clockwise} = \frac{\pi^2\theta_0 B^2 l^4 C}{T^2}\sin\left(\frac{2\pi t}{T}\right)$$ **Ans.**

Example 12

A battery of emf E and of negligible internal resistance is connected in an L-R circuit as shown in figure. The inductor has a piece of soft iron inside it. When steady state is reached the piece of soft iron is abruptly pulled out suddenly so that the inductance of the indctor decreases to nL with n < 1 with battery remaining connected. Calculate :

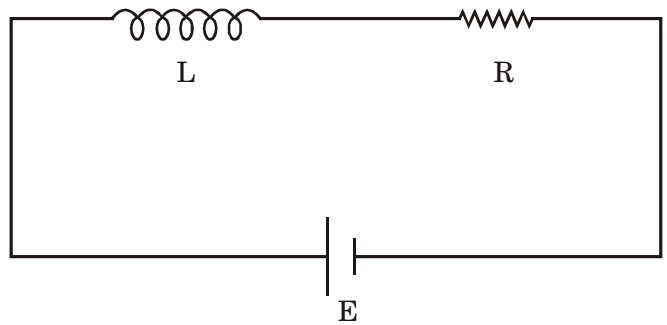

(a) current as a function of time assuming t = 0 at the instant when piece is pulled.

(b) the work done to pull out the piece.,

(c) thermal power generated in the circuit as a function of time.

(d) power supplied by the battery as a function of time.

How to Proceed : When the inductance of an inductor is abruptly changed, the flux passing through it remains constant.

$$\phi = \text{constant}$$

$$\therefore \quad Li = \text{constant} \left(L = \frac{\phi}{i}\right)$$

Solution :

(a) At time t = 0, steady state current in the circuit is $i_0 = E/R$. Suddenly L reduces to nL (n < 1), so current in the circuit at time t = 0 will increase to $\frac{i_0}{n} = \frac{E}{nR}$. Let i be the current at time t.

Applying Kirchhoff's loop rule we have,

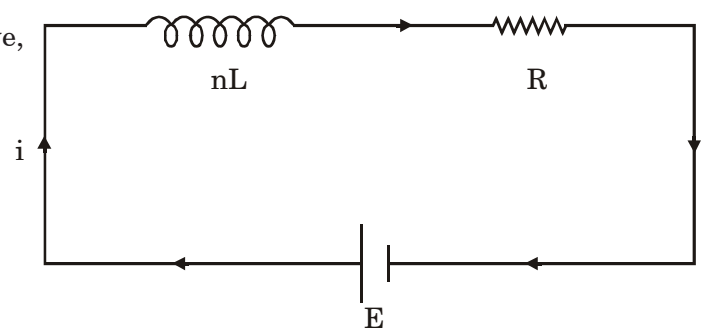

$$E - nL\left(\frac{di}{dt}\right) - iR = 0$$

$$\therefore \quad \frac{di}{E - iR} = \frac{1}{nL}dt$$

$$\therefore \quad \int_{i_0/n}^{1} \frac{di}{E - iR} = \frac{1}{nL}\int_0^t dt$$

Solving this equation, we get $i = i_0 - \left(i_0 - \frac{i_0}{n}\right)e^{-t/\tau_L}$ **Ans.**

Here $i_0 = \frac{E}{R}$ and $\tau_L = \frac{nL}{R}$

From the i-t equation, we get $\frac{i_0}{n}$ at t = 0 and $i = i_0$ at $t = \infty$

The i-t graph is as shown in figure.

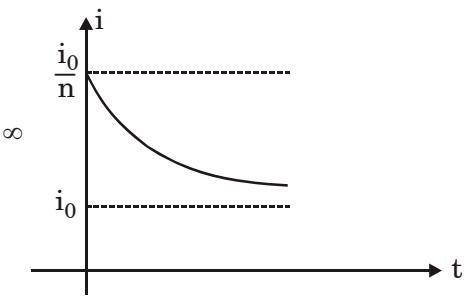

Note : At t = 0, current in the circuit is $\frac{i_0}{n}$. Current in the circuit in steady state will be again i_0. So it will decrease exponentially from $\frac{i_0}{n}$ to i_0. From the i-t graph the equation will be formed without doing any calculation.

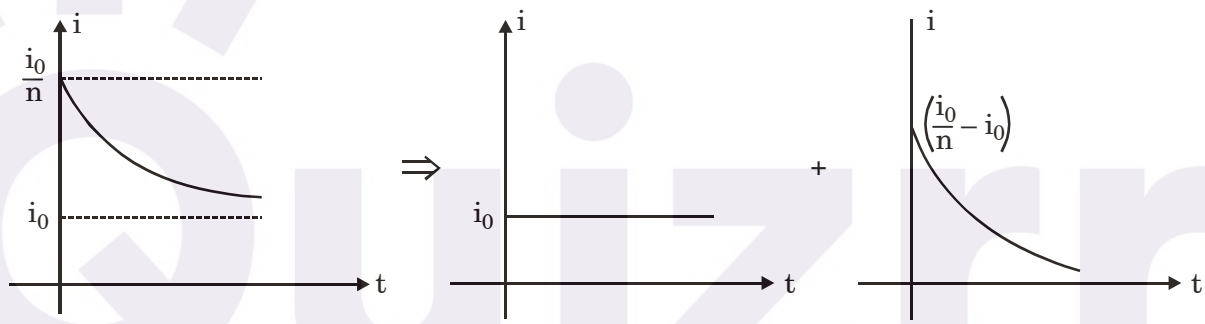

$\therefore$ $$i = i_0 + \left(\frac{i_0}{n} - i_0\right)e^{-t/\tau_L}$$

(b) Work done to pull out the piece,

$$W = U_f - U_i = \frac{1}{2}L_f i_f^2 - \frac{1}{2}L_i i_i^2$$

$$= \frac{1}{2}(nL)\left(\frac{E}{nR}\right)^2 - \frac{1}{2}(L)\left(\frac{E}{R}\right)^2$$

$$= \frac{1}{2}L\left(\frac{E}{R}\right)^2\left(\frac{1}{n} - 1\right)$$

$$= \frac{1}{2}L\left(\frac{E}{R}\right)^2\left(\frac{1-n}{n}\right)$$

(c) Thermal power generated in the circuit as a function of time is,

$$P_1 = i^2R \qquad \textbf{Ans.}$$

Here i the the current calculated in part (a).

(d) Power supplied by the battery as a function of time is,

$$P_2 = Ei \qquad \textbf{Ans.}$$

Example 13

A loop is formed by two parallel conductors connected by a solenoid with inductance L and a conducting rod of mass m which can freely (without friction) slide over the conductor. The conductors are located in a horizontal plane in a uniform vertical magnetic field B. The distance between the conductors is l. At the moment t = 0, the rod is imparted an initial velocity v_0 directed to the right. Find the law of its motion x (t) if the electric resistance of the loop is negligible.

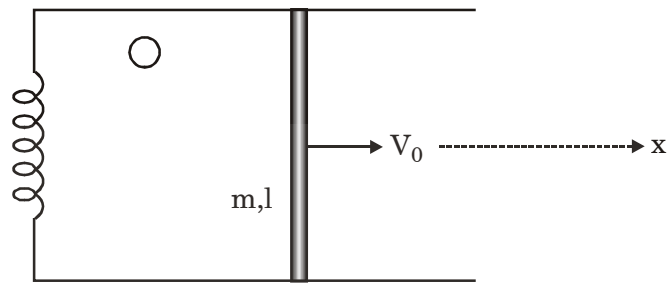

Solution :

Let at any instant of time, velocity of the rod is v towards right. The current in the circuit is i. In the figure,

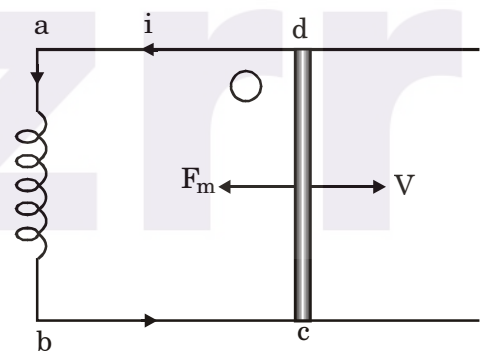

$$V_a - V_b = V_d - V_c$$

or $$L\frac{di}{dt} = Bvl = Bl\frac{dx}{dt} \quad \left(\text{as } v = \frac{dx}{dt}\right)$$

i.e., $$Ldi = Bldx$$

Integrating, we get $$Li = Blx \qquad ...(i)$$

or $$i = \frac{Bl}{L}x$$

Magnetic force on the rod at this instant is,

$$F_m = ilB = \frac{B^2l^2}{L}x \qquad ...(ii)$$

Since, this force is in opposite direction of $\vec{v}$, so from Newton's second law we can write,

$$m\left(\frac{d^2x}{dt^2}\right) = -\frac{B^2l^2}{L}x$$

or $$\left(\frac{d^2x}{dt^2}\right) = -\frac{B^2l^2}{mL}x$$

Comparing this with equation of SHM, i.e.,

$$\frac{d^2x}{dt^2} = -\omega^2 x$$

we have, $$\omega = \frac{Bl}{\sqrt{mL}}$$

Therefore, the rod will oscillate simple harmonically with angular frequency $\omega = Bil\sqrt{mL}$. At time t = 0, rod was at x = 0 and it was moving towards positive x-axis. Hence, x-t equation of the rod is

$$x = A \sin \omega t \qquad ...(iii)$$

To find A, we use the fact that t = 0, v or $\frac{dx}{dt}$ have a value v_0. Hence,

$$\frac{dx}{dt} = v = A\omega\cos\omega t$$

or $$A\omega = v_0 \qquad (\text{at } t = 0)$$

or $$A = \frac{v_0}{\omega}$$

Substituting in Eq. (iii), we have

$$x = \frac{v_0}{\omega} \sin \omega t, \quad \text{where } \omega = \frac{Bl}{\sqrt{mL}}$$ **Ans.**

Alternate method of finding A : At x = A, v = 0, i.e., whole of its kinetic energy is converted into magnetic energy. Thus

$$\frac{1}{2}Li^2 = \frac{1}{2}mv_0^2$$

Substituting value of i from Eq. (i), with x = A, we have

$$L\left(\frac{Bl}{L}A\right)^2 = mv_0^2$$

or $$A = \frac{\sqrt{mL}}{Bl}v_0 = \frac{v_0}{\omega}$$

as $$\omega = \frac{Bl}{\sqrt{mL}}$$

Example 14

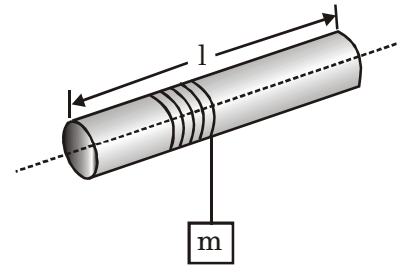

A long insulating cylinder of radius R and length l carries a uniformly distributed surface charge q. A string is wound around the cylinder from which a block of mass m hangs. The mass is free to move downwards and can rotate the cylinder. Neglecting the moment of inertia of the cylinder, calculate the acceleration of the block.

How to Proceed : If there were no charge on the cylinder, tension would had been zero (as moment of inertia of the cylinder is zero, so no torque is required for its rotation). In this case acceleration of the block would had been g downwards. But due to rotating charge on the cylinder a magnetic field will appear. Further due to angular acceleration of the cylinder this magnetic field will be changing. The change in magnetic field (and hence, the magnetic flux) producdes an electric field. So the cylinder will experience a torque due to electric force on the charge over it. Hence, tension in the string will not be zero, or acceleration of block will be less than g.

Solution :

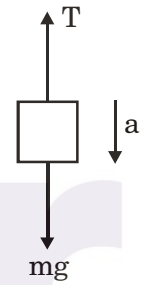

Let a be the acceleration of the block downwards and T the tension in the string.

The equation of motion of the block is,

$$mg - T = ma \qquad ...(i)$$

If the system is released from rest, the velocity of block at time t would be,

$$v = at$$

So, angular velocity of cylinder at this instant is,

$$\omega = \frac{v}{R} = \frac{at}{R}$$

or frequency is, $$f = \frac{\omega}{2\pi} = \frac{at}{2\pi R}$$

The surface charge q of the cylinder spins with it. The effective current over the surface of the cylinder is, $$i = qf = \frac{qat}{2\pi R}$$

The cylinder can now be treated as a solenoid with one turn, carrying a current i. The number of turns per unit length is, $$n = \frac{1}{l}$$

The magnetic field on its axis is, $$B = \mu_0 ni = \frac{\mu_0 qat}{2\pi Rl}$$

$$\frac{dB}{dt} = \frac{\mu_0 qa}{2\pi Rl}$$

The unsteady magnetic field induces an electric field at the surface of the cylinder. The magnitude of this electric field is,

$$E = \frac{R}{2}\frac{dB}{dt} = \frac{\mu_0 qa}{4\pi l}$$

This electric field interacts with the charge on the surface of the cylinder and causes a torque. The magnitude of this torque is,

$$\tau = qER = \frac{\mu_0 q^2 Ra}{4\pi l}$$

From Lenz's law direction of this torque is to oppose the motion of the cylinder. Further, moment of inertia of the cylinder is zero. Hence, net torque on the cylinder should be zero.

So, torque of tension should balance this torque, or

$$TR = \frac{\mu_0 q^2 Ra}{4\pi l}$$

or

$$T = \frac{\mu_0 q^2 a}{4\pi l}$$

Substituting in Eq. (i), we get

$$mg - \frac{\mu_0 q^2 a}{4\pi l} = ma$$

or

$$a = \frac{g}{1 + \frac{\mu_0 q^2}{4\pi ml}}$$ **Ans.**

Note : From this expression we can see that, $a = 0$ if $m = 0$ and $a = g$ if $q = 0$