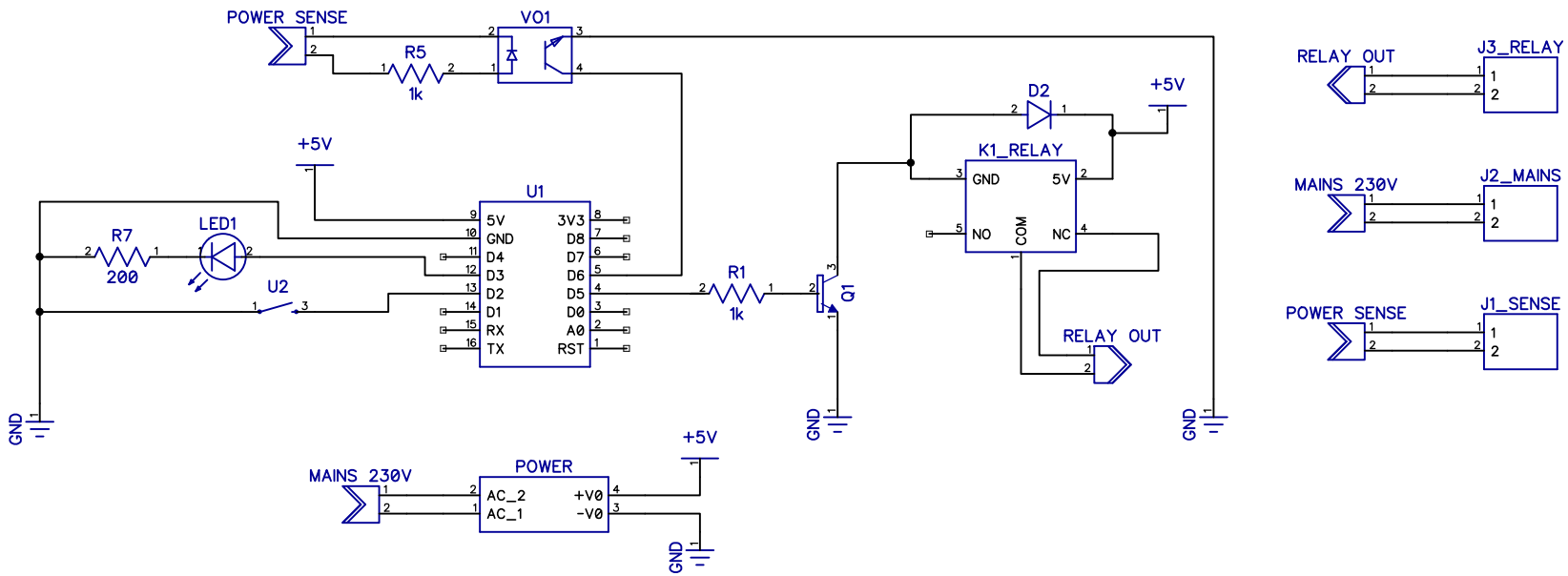

RefDes	Name	Value	Quantity
D2	DIODE		1
J1, J2, J3	PRT-08432		3
K1	SRD-05VDC-SL-C		1
POWER	Hi-Link HLK-PM01		1
Q1	TRANSISTOR_NPNTO92		1
R1, R5	RES	1k	2
R2	RES	33k	1
R6, R7	RES	200	2
STATUSLED	LED		1
U1	D1_MINI		1
U2	SWITCH-MOMENTARY-2PTH		1
VO1	LTV-817M		1
			16

Konrad Jelen

Espresso Switch v1.1

ESP8266 Homekit Espresso Remote Switch

SIZE	FSCM NO.	DWG NO.	REV 1
SCALE		Sheet 1	