REVISIONS				
ZONE	REV	DESCRIPTION	DATE	APPROVED

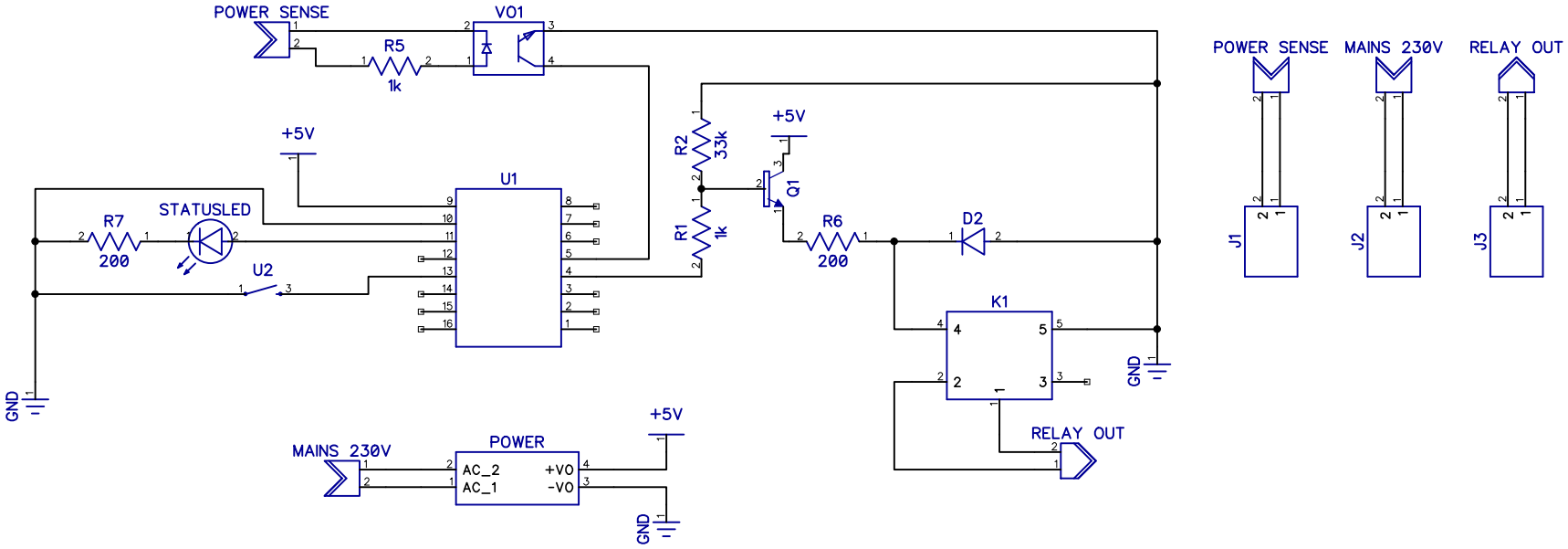

Konrad Jelen	Espresso Switch v1.0			
	ESP8266 Homekit Espresso Remote Switch			
	SIZE	FSCM NO.	DWG NO.	REV 1
	SCALE		Sheet 1	