21 An electrical circuit is connected to a cylindrical metal case with an insulating base as shown. Conducting liquid fills the case to a depth of *x*.

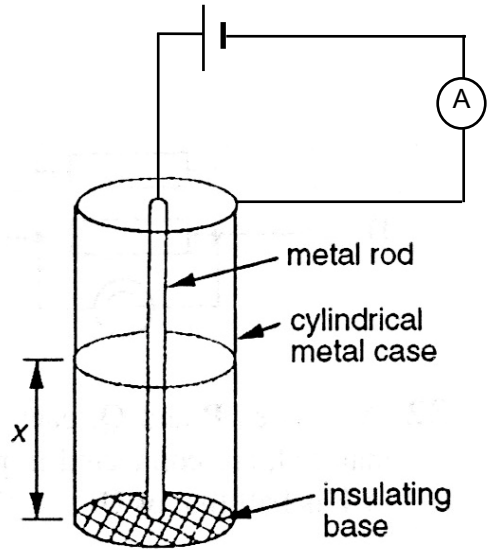

How does the current *I* in the ammeter vary as *x* changes?

A $I \propto x$

B $I \propto x^2$

C $I \propto \frac{1}{x}$

D $I \propto \frac{1}{x^2}$