22 The diagram below shows a potentiometer circuit in which the wire AB is 100.0 cm long and has a resistance of 5.0 Ω. The e.m.f of the driver cell is 2.0 V and e.m.f of the cell with an internal resistance 1.0 Ω of connected between C and J is 1.5 V. At point J, there is no deflection in the galvanometer.

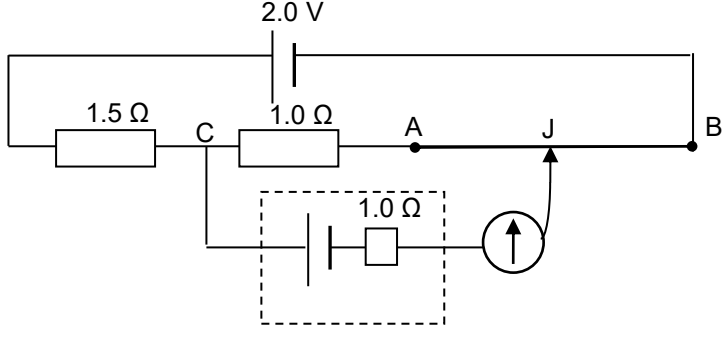

What is the balance length AJ?

A 7.5 cm **B** 20.0 cm **C** 80.0 cm **D** 92.5 cm