For Examiner's Use

5 **(a)** A current I passes through a conductor with uniform cross-sectional area A and length L as shown in Fig. 5.1. n is the number density of electrons in the conductor while v is the drift velocity of the electrons.

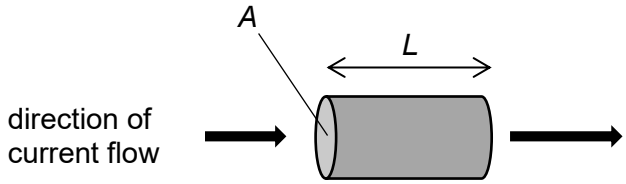

Fig. 5.1

(i) Using the definition of current, show that $I = nevA$.

[2]

(ii) A copper wire of diameter 1.4 mm is connected in series to a tungsten filament of diameter 0.020 mm in a circuit. Copper and tungsten have 8.0×10^{28} and 3.4×10^{28} electrons per cubic metre respectively.

The drift velocity of electrons in copper is $v = 0.021 \times 10^{-3}$ m s^{-1}.

Determine the drift velocity of electrons in tungsten filament.

drift velocity = …… m s^{-1} [2]

For Examiner's Use

(b) Fig. 5.2 shows a fixed resistor R and a thermistor connected in parallel to a battery with an electromotive force *E* and internal resistance *r*.

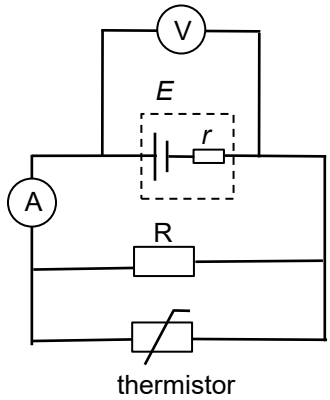

Fig 5.2

Fig. 5.3 shows how the readings in the voltmeter *V* changes as current drawn from the battery, *I*, varies.

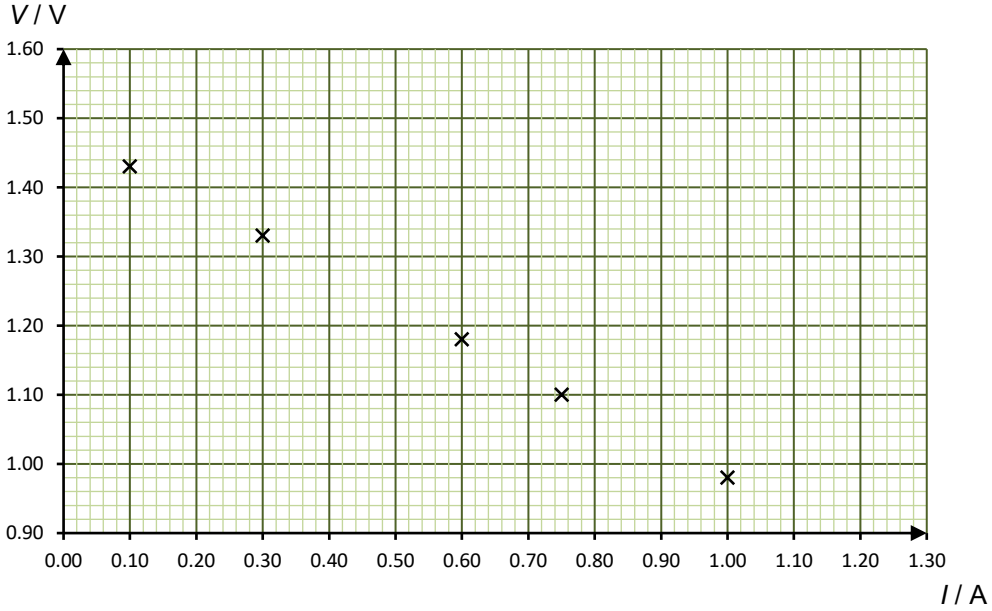

Fig. 5.3

For Examiner's Use

(i) Use Fig. 5.3 to determine E and r.

E = ... V [1]

r = ... Ω [2]

(ii) State and explain how the power output of R varies as temperature of the thermistor increases.