Answer **one** question in this section.

7 **(a)** Define electric field strength at a point.

.....

.....

..... [2]

(b) A small charged metal sphere is situated in an earthed metal box. Fig. 7.1 illustrates the electric field between the sphere and the metal box.

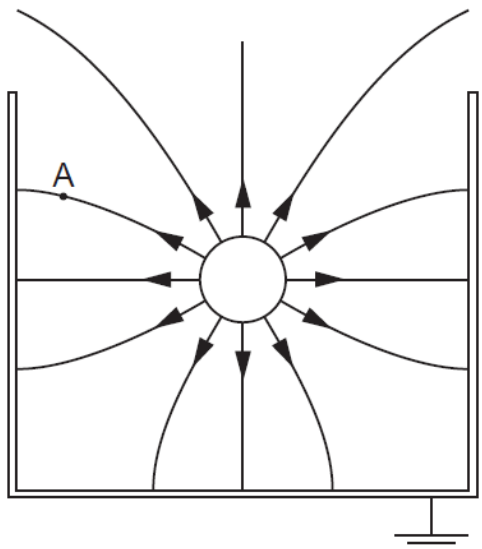

Fig. 7.1

(i) By reference to Fig. 7.1, state and explain

1. whether the sphere is positively or negatively charged,

.....

.....

..... [1]

2. why it appears as if the charge on the sphere is concentrated at the centre of the sphere.

.....

..... [1]

(ii) On Fig. 7.1, draw an arrow to show the direction of the force on a stationary electron situated at point A. [1]

(iii) The radius r of the sphere is 2.4 cm. The magnitude of the charge q on the sphere is 0.76 nC.

1. Calculate a value for the magnitude of the electric potential V at the surface of the sphere.

electric potential = …… V [2]

2. State the sign of the charge induced on the inside of the metal box. Hence explain whether the actual magnitude of the potential will be greater or smaller than the value calculated in **(iii) 1**.

.....

.....

.....

..... [3]

(iv) Two electrons on the surface of the metal box are separated by a distance of 6.0×10^{-10} m. Determine the ratio

$$\frac{\text{electric force between the electrons}}{\text{weight of an electron}}$$

ratio = …….. [2]

(v) A lead sphere is placed in a lead box, in a similar arrangement to that shown in Fig. 7.1. Explain why it is **not** possible for the gravitational field to have a similar shape to that of the electric field.

.....

..... [1]

(c) A large horseshoe magnet produces a uniform magnetic field of flux density *B* between its poles. Outside the region of the poles, the flux density is zero.
The magnet is placed on a top-pan balance and the wire XY is situated between its poles, as shown in Fig. 7.2.

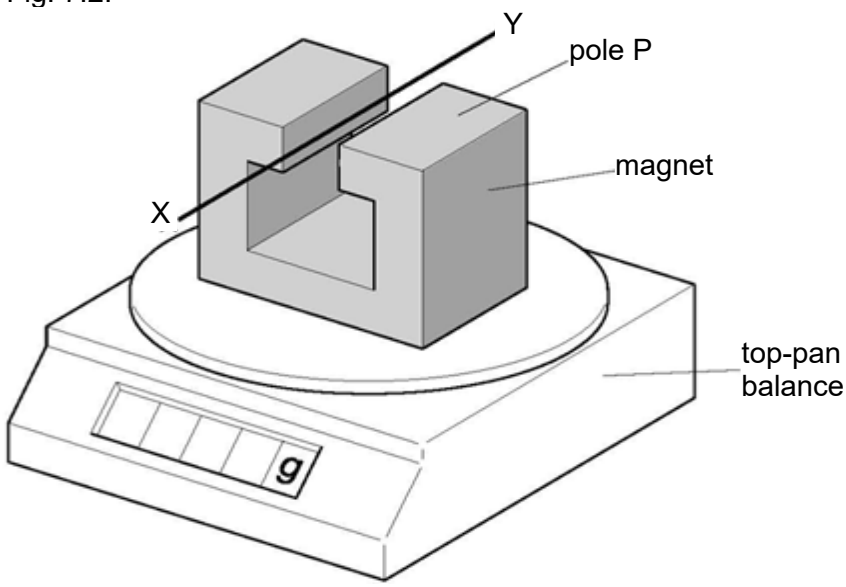

Fig. 7.2

The wire XY is horizontal and normal to the magnetic field. The length of wire between the poles is 4.4 cm.

A direct current of magnitude 2.6 A is passed through the wire in the direction from X to Y. The reading on the top-pan balance increases by 2.3 g.

(i) State and explain the polarity of the pole P of the magnet.

…….....

…….....

…….....

…….....

…….....

……..... [3]

(ii) Calculate the magnetic flux density between the poles.

magnetic flux density = ……...T [2]

(iii) A low frequency alternating current is now passed through the wire.
The root-mean-square (r.m.s.) value of the current is 2.6 A.

Describe quantitatively the variation of the reading seen on the balance.

…….....

…….....

…….....

……..... [2]