3 **(a)** Define *specific latent heat*.

.....

.....

..... [1]

(b) A beaker containing a liquid is placed on a balance, as shown in Fig. 3.1.

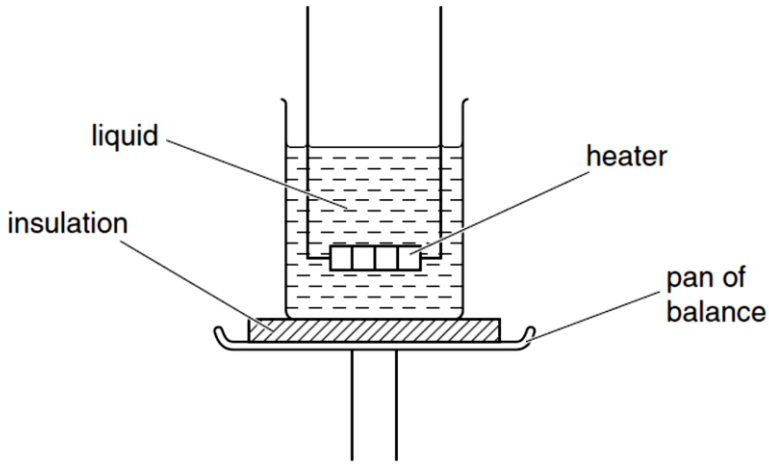

Fig. 3.1

A heater of power 120 W is immersed in the liquid. The heater is switched on and, when the liquid is boiling, balance readings *M* are taken at corresponding times *t*.

A graph of the variation with time *t* of the balance reading *M* is shown in Fig. 3.2.

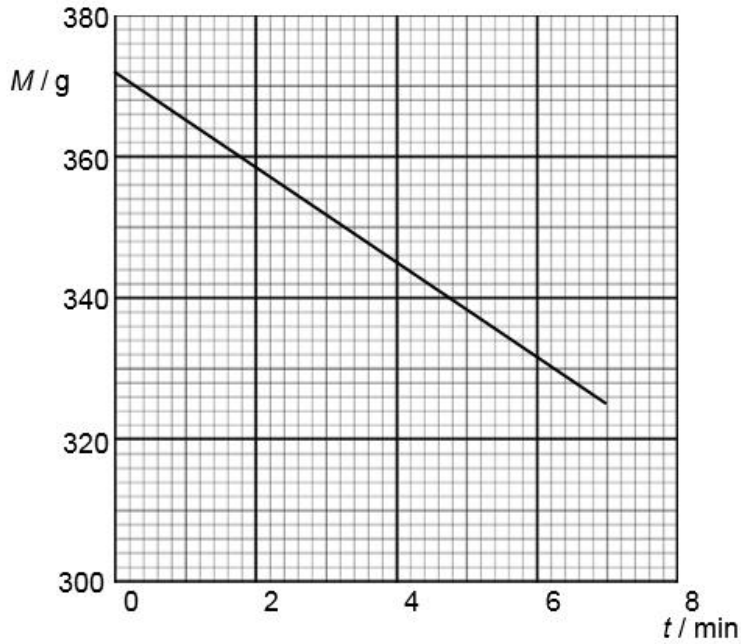

Fig. 3.2

(i) State the feature of Fig. 3.2 which suggests that the liquid is boiling at a steady rate.

.....

..... [1]

(ii) Use data from Fig. 3.2 to determine a value for the specific latent heat of vaporisation l_v of the liquid. Explain your working.

l_v = ... J kg^{-1} [3]

(c) State, with a reason, whether the experimental value determined in **(b)(ii)** is likely to be an overestimate or an underestimate of the expected value for the specific latent heat of vaporisation of the liquid.

.....

..... [2]