7 A spring is attached to the middle of a horizontal wooden rod AB. A U-shaped metal wire ASTB is attached to the rod AB. The U-shaped wire is placed with side ST in a region of uniform magnetic flux pointing out of the page, as shown in Fig. 7.1.

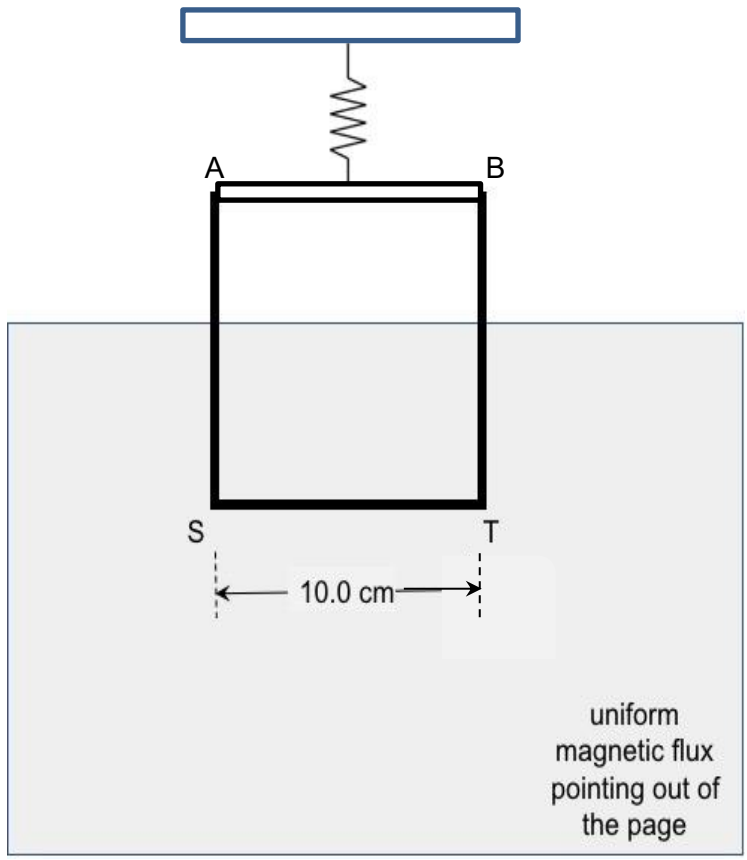

Fig. 7.1

The frame is then pulled down a distance of 1.0 cm and then released. The wire ST undergoes simple harmonic motion in the vertical direction.

(a) **(i)** Using Faraday's law of electromagnetic induction, explain why there is an induced e.m.f. in the wire ST while it is in motion.

.....

.....

.....

.....

..... [3]

(ii) Explain why the induced e.m.f. varies sinusoidally with time.

.....

.....

..... [2]

[Turn over

(b) The wooden rod AB is replaced by a metal rod. The frame is then set to oscillate as in **(a).**

(i) Sketch the time variation of the induced e.m.f. observed on Fig. 7.2. Explain your answer.

Fig. 7.2

.....

.....

..... [3]

(ii) Explain, how your graph in Fig. 7.2 will change, if any, when the metal rod AB and the wire ASTB are both fully inside the magnetic field.

.....

..... [2]