Answer **one** question from this Section in the spaces provided.

7 **(a)** Distinguish between the *electromotive force* and the *potential difference* in terms of energy considerations.

.....

.....

.....

.....

.....

.....[2]

(b) Felix connects a voltmeter, of resistance R_V, and an ammeter, of resistance R_A, as shown in Fig. 7.1 to measure the resistance R of a resistor. V is the voltmeter reading, I is the ammeter reading and E is the e.m.f. of the cell.

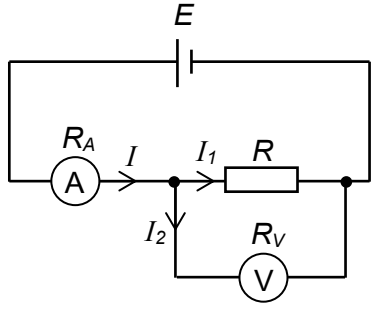

Fig. 7.1

(i) Derive an expression for the value of R in terms of I, V and R_V.

expression = ... [2]

For Examiner's Use

(ii) Felix rearranges the circuit and connects the voltmeter and ammeter as shown in Fig. 7.2 to measure the same resistance R.

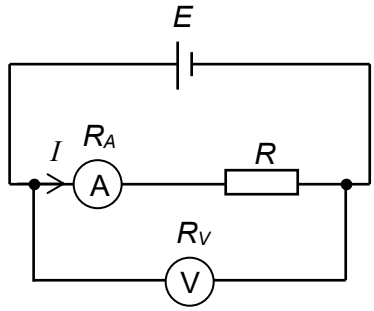

Fig. 7.2

Derive an expression for the value of R in terms of I, V and R_A.

expression = ... [2]

(iii) Hence, suggest what the values of R_V and R_A should be such that the value of R is equal to $\frac{V}{I}$.

.....

.....

.....[2]

For Examiner's Use

(c) Felix set ups a potentiometer circuit as shown in Fig. 7.3. The resistivity of wire AB is 1.4×10^{-6} Ω m, with a length of 1.1 m and a circular cross-section of radius 0.304 mm. The 2.2 V and 1.8 V cells have internal resistances of 0.30 Ω and 1.1 Ω respectively.

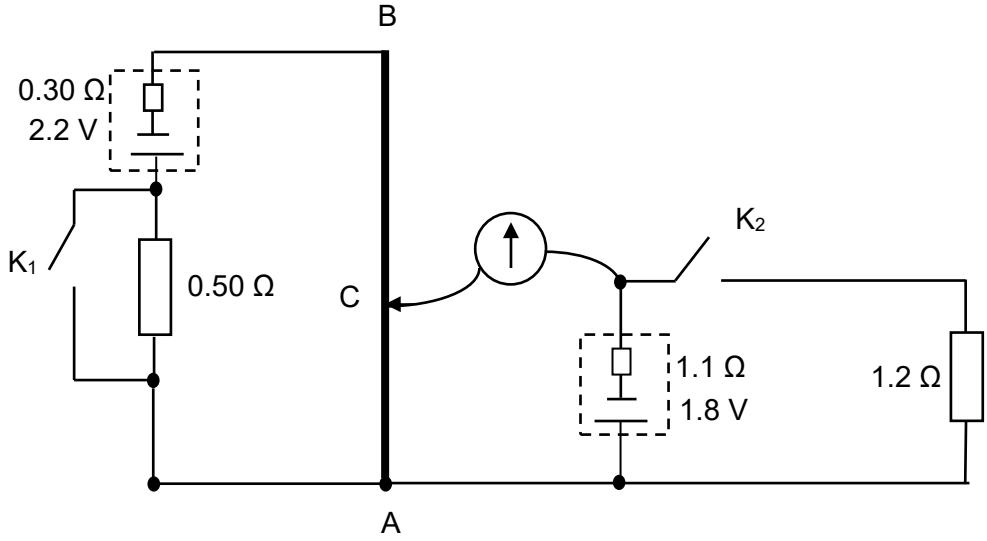

Fig. 7.3

(i) Determine the resistance of wire AB.

resistance = ... Ω [2]

(ii) **1.** Calculate the length AC required to produce zero current in the galvanometer with switch K_1 open and switch K_2 closed.

length = ... cm [2]

For Examiner's Use

2. State and explain the change in length, if any, in your answer to **(ii) 1.**, if both switches K_1 and K_2 are open.

……

……

……[2]

(iii) When both switches K_1 and K_2 are closed and there is zero current in the galvanometer,

1. calculate the power dissipated across wire AB and

power = ... W [2]

2. calculate the mean drift velocity v of the electron, if the number of electrons in one cm^3 of wire AB is 10^{23}.

v = ... $m\ s^{-1}$ [1]

(d) During his course of study in Physics, Felix comes across an electrical component. The variation with potential difference V of current I for the component is shown in Fig. 7.4.

For Examiner's Use

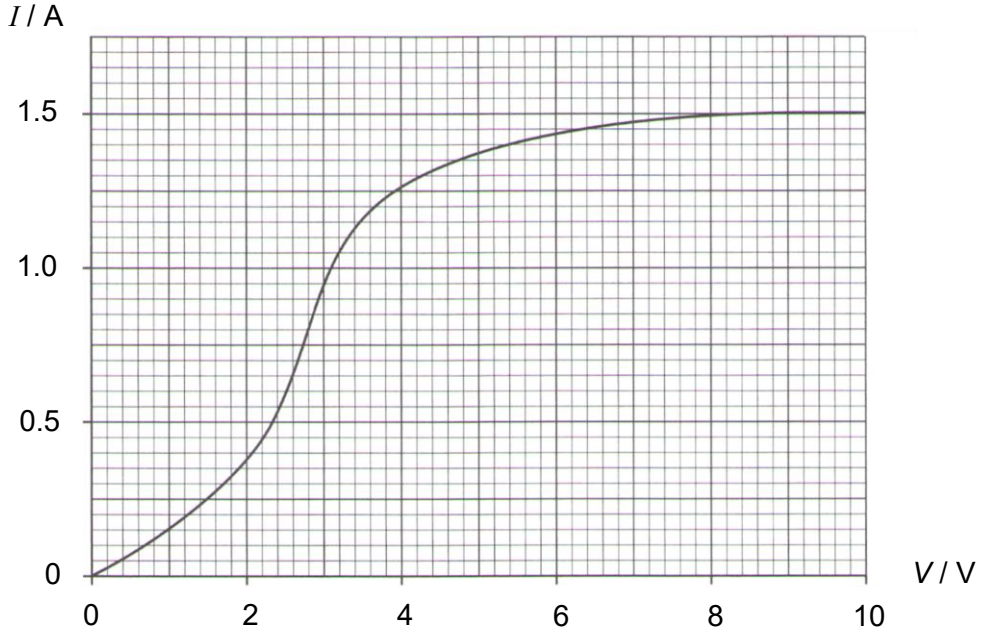

Fig. 7.4

(i) Use Fig. 7.4 to determine the resistance of the component at 3.4 V.

resistance = ... Ω [1]

(ii) Describe how the resistance of this component changes with the potential difference applied across it from 0 V to 6.0 V.

.....

.....

.....

..... [2]