9 The diagram below shows a motorised vehicle for carrying one person.

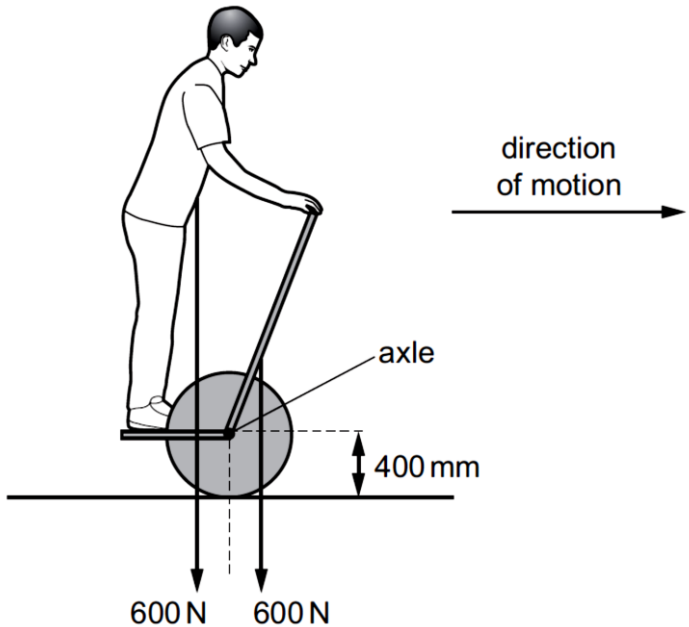

The vehicle has two wheels on one axle. The passenger stands on a platform between the wheels.

The weight of the machine is 600 N. Its centre of mass is 200 mm in front of the axle. The wheel radius is 400 mm.

When stationary, a passenger of weight 600 N stands with his centre of mass 200 mm behind the axle to balance the machine.

The motor is now switched on to provide a horizontal force of 90 N at the ground to move the vehicle forwards.

How far and in which direction must the passenger move his centre of mass to maintain balance?

A 60 mm backward

B 60 mm forward

C 140 mm backward

D 140 mm forward