5 **(a)** You are provided with a galvanometer, a switch, a 100 Ω fixed resistor, and some connecting wires.

By completing the potentiometer circuit diagram in Fig. 5.1, explain how the internal resistance of an unknown cell ε may be determined.

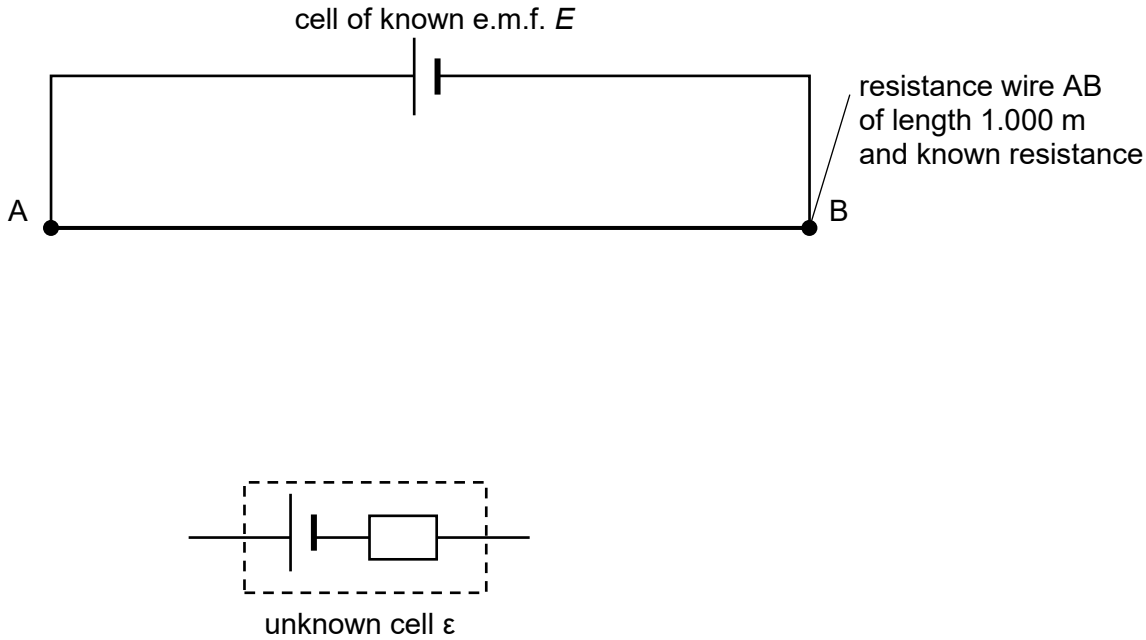

Fig. 5.1

.....

.....

.....

.....

.....

..... [3]

(b) Fig 5.2 shows a potentiometer circuit in which the resistance wire is made up of 7 identical strands of unshielded constantan wire.

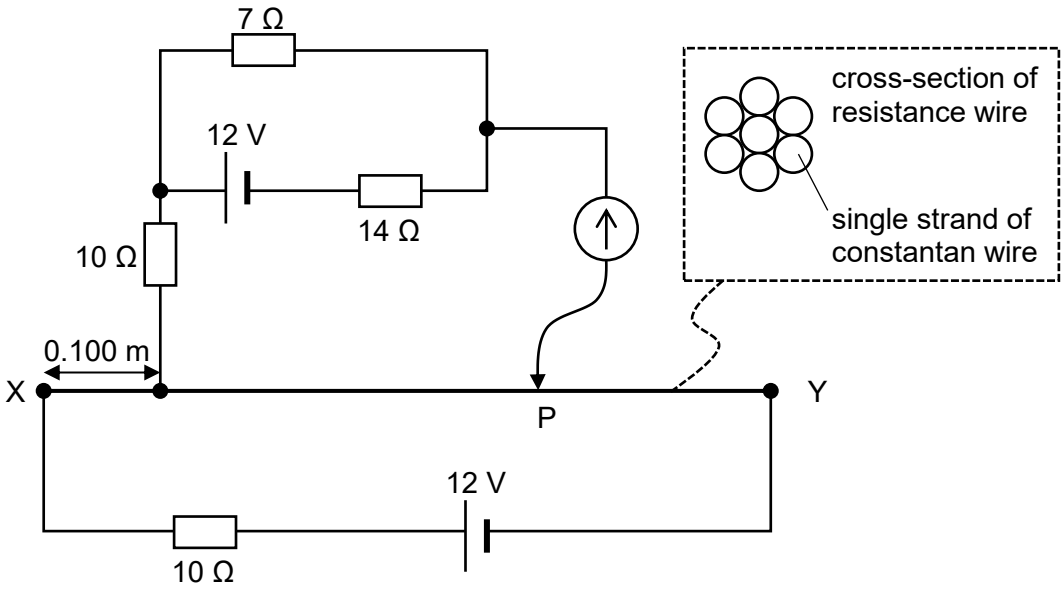

Fig. 5.2

(i) Each constantan strand has a diameter of 0.15 mm. Given that XY is 1.00 m long, show that XY has a resistance of 4.0 Ω.(Resistivity of constantan is 4.90×10^{-7} Ω m.) [2]

(ii) The cells have negligible internal resistances. Explain quantitatively whether a balance length can be found. [3]