6 Radiation of wavelength 4.0×10^{-7} m is incident on the photo-cathode **C** of a photo-cell. The photo-cell is connected to a potential divider arrangement as shown in Fig. 6.1. The material of **C** has a work function of value 3.0×10^{-19} J.

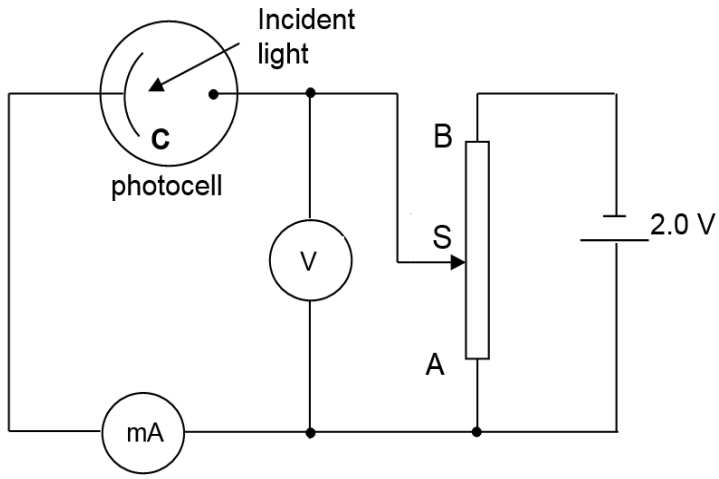

Fig. 6.1

(a) Explain what is meant by *work function*.

.....

.....

..... [1]

(b) **(i)** Calculate the maximum kinetic energy of the electrons emitted from the photo-cathode.

maximum kinetic energy = …… eV [3]

(ii) Suggest a reason why not all photoelectrons have this maximum energy.

.....

.....

..... [1]

(iii) Calculate the minimum reading of the voltmeter when the milli-ammeter registers no current flowing through it.

voltmeter reading = …… V [1]

(c) The sliding contact S is moved from A towards B.

On Fig. 6.2, sketch a graph of current registered by milli-ammeter against potential difference *V* measured across the analog voltmeter. [2]

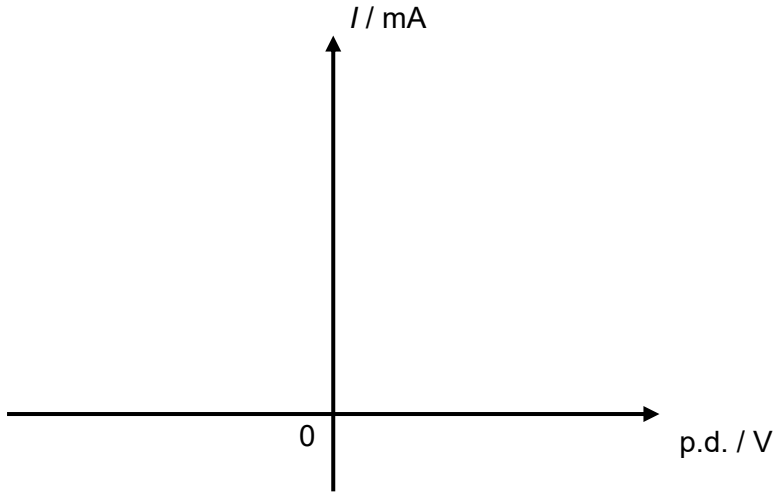

Fig. 6.2

(d) The polarity of the battery is now reversed. Explain why the milli-ammeter will always register a current flowing through it, regardless of the position of the sliding contact S on AB.

.....

.....

.....

..... [2]

(e) In an actual experiment using the setting in **(d)**, the frequency of the irradiating photons is equal to the threshold frequency. However, there is no photocurrent registered by the milli-ammeter regardless of the position of the sliding contact S on AB.

Suggest a reason for this observation.

.....

..... [1]