5 **(a)** The variation with temperature of the resistance R_T of a thermistor is shown in Fig. 5.1.

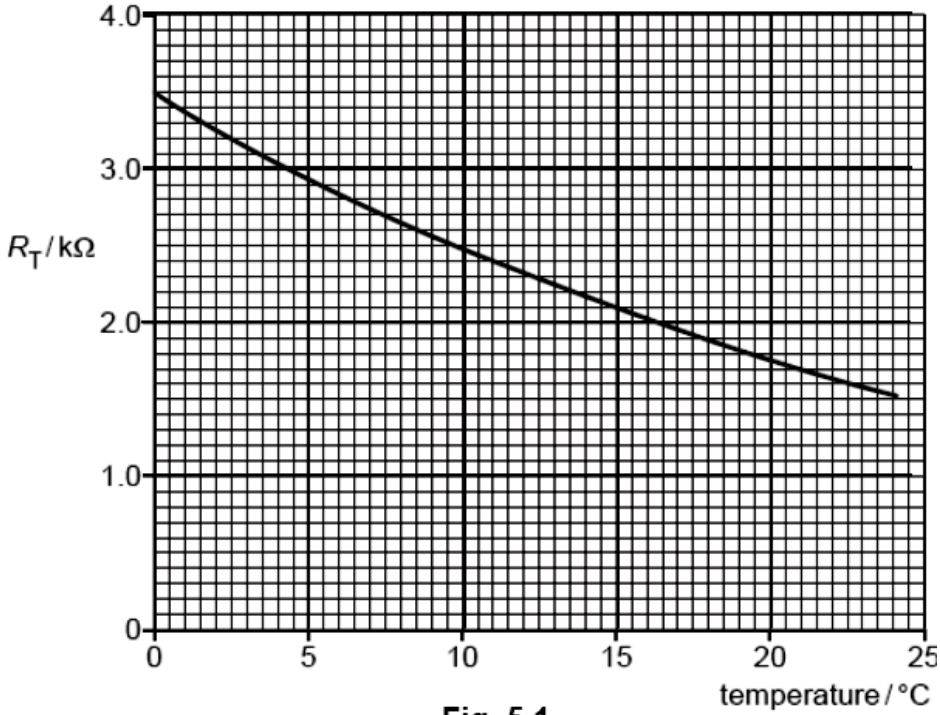

Fig. 5.1

The thermistor is connected in series with a resistor R as shown in the circuit in Fig. 5.2.

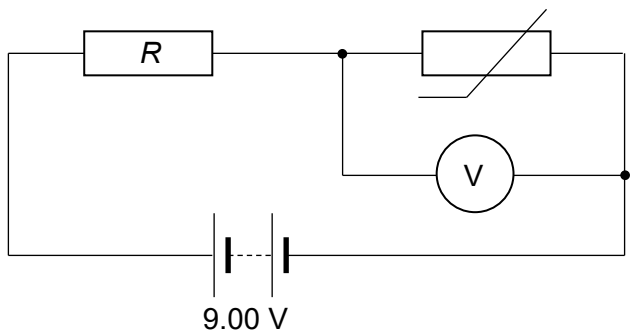

Fig. 5.2

The battery has e.m.f. 9.00 V and negligible internal resistance. The voltmeter has infinite resistance.

(i) For the thermistor at 22.5 °C, determine the resistance of the thermistor.

R_T = ……..…… Ω [1]

(ii) Given that the voltmeter reading is 2.70 V, determine the resistance of resistor R.

resistance of R = ……..…… Ω [2]

(b) The voltmeter is now removed from the original circuit and the rest of the circuit is connected to a potentiometer as shown in Fig. 5.3.

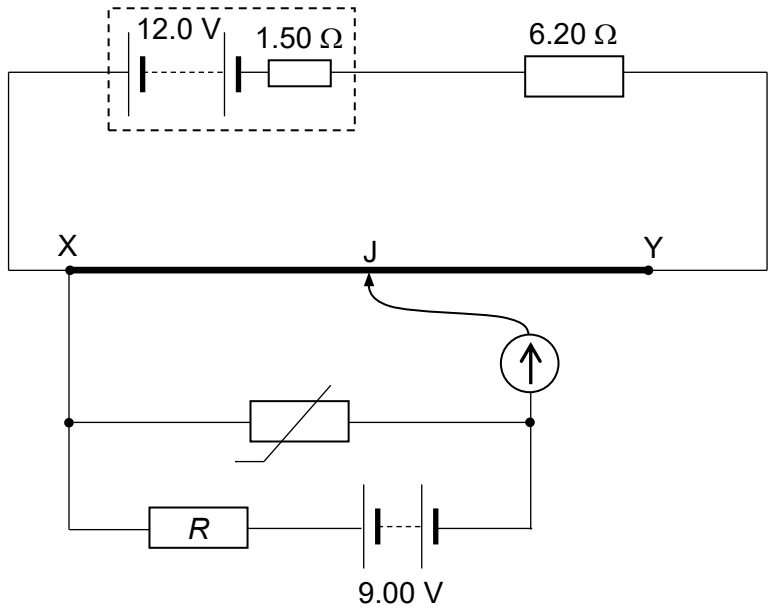

Fig. 5.3

The potentiometer has a driver cell of e.m.f. 12.0 V with internal resistance of 1.50 Ω. It is connected in series with a resistor of resistance 6.20 Ω and a uniform resistance wire XY, of length 120 cm and radius 0.250 mm. The resistivity of the wire is 1.10×10^{-6} Ω m.

(i) Determine the resistance of the wire XY.

resistance of wire XY = …….. Ω [2]

(ii) For the thermistor at 22.5 °C, determine the balance length XJ where there is no deflection in the galvanometer.

XJ = …….. m [2]

(iii) Explain what will happen to the position of the balance point J if the thermistor is at a temperature of 0 °C.

……..

……..

…….. [2]

(iv) Supposed the 6.20 Ω resistor is replaced by a resistor of smaller resistance, explain what will happen to the position of the balance point J.

……..

……..

…….. [2]