4 In order to investigate the variation of the current I in a variable resistor with the potential difference V across it, a student set up the following circuit.

For Examiner's Use

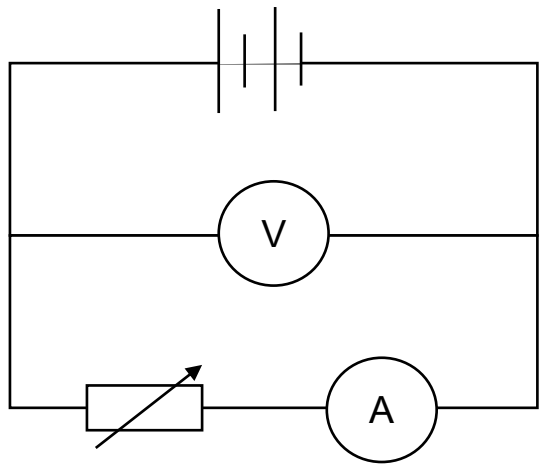

Fig. 4.1

The variation of V with I is shown below.

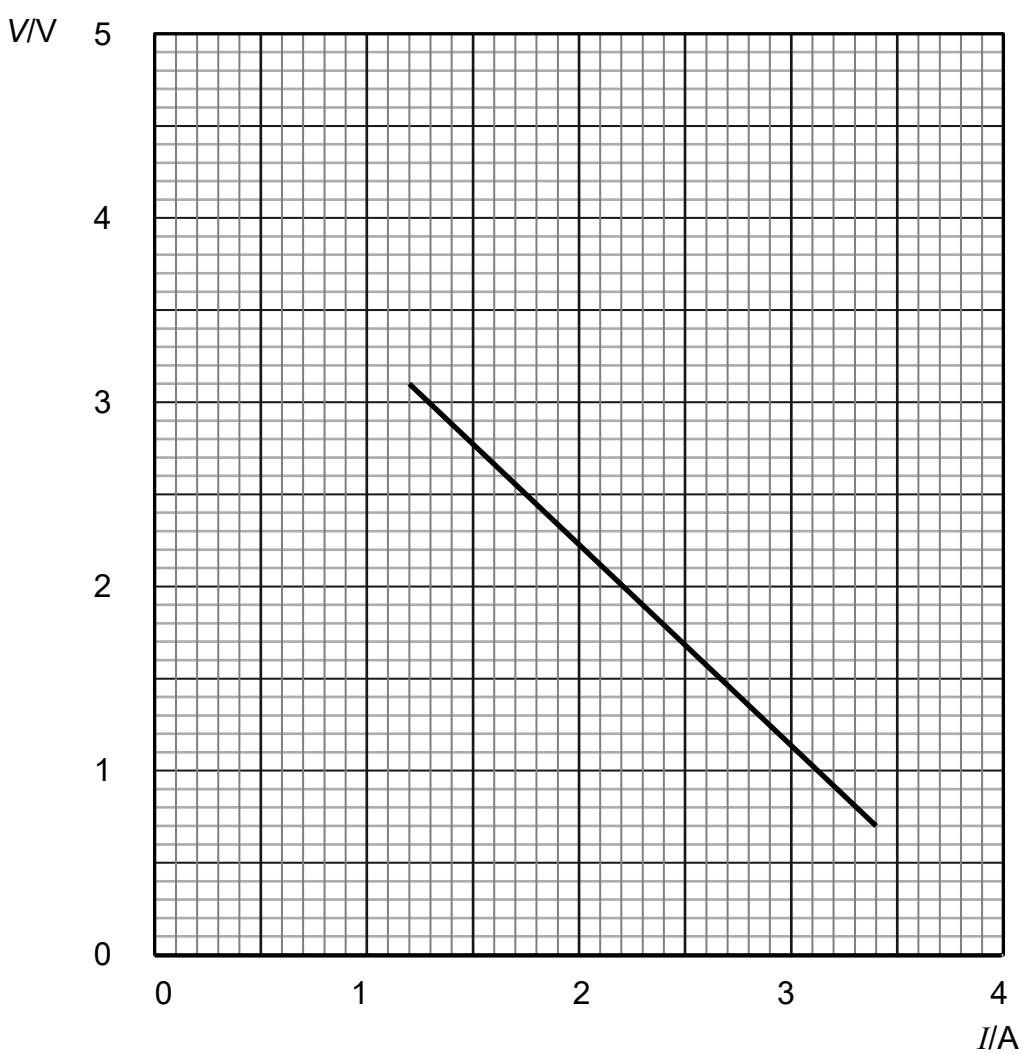

Fig. 4.2

For Examiner's Use

(a) **(i)** With reference to the graph, explain why the internal resistance of the battery is not negligible.

……

…….... [1]

(ii) Show that the e.m.f of the battery and its internal resistance is 4.4 V and 1.1 Ω respectively.

[2]

(b) The battery in **(a)** is to be used as the power source for an electrical device. The device is rated as 0.80 V, 1.5 A.
Complete the circuit below to show how the battery may be connected so that the device operates normally. Calculate the value of any other component you may use.

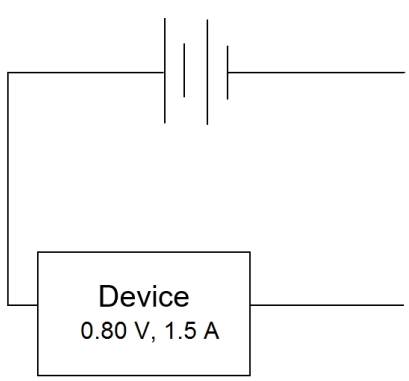

[3]