For Examiner's Use

6 **(a)** Electromagnetic radiation is incident on a negatively charged zinc plate. Electrons are emitted from the surface of the plate when a weak intensity ultraviolet source is used. Electrons are not emitted at all when an intense visible light from a lamp is used.

Explain these observations.

.....

.....

.....

.....

.....

.....

.....

.....

..... [4]

(b) The **maximum** wavelength of the electromagnetic radiation incident on the surface of a metal which causes electrons to be emitted is 2.9×10^{-7} m. Calculate the maximum kinetic energy of electrons emitted from the surface of the metal when each incident photon has energy of 5.1 eV.

maximum kinetic energy = ... J [3]

(c) Electromagnetic radiation of constant wavelength is incident on a metal plate. Photoelectrons are emitted from the metal plate. Fig. 6.1 shows an arrangement used to determine the maximum kinetic energy of electrons emitted from a metal plate.

For Examiner's Use

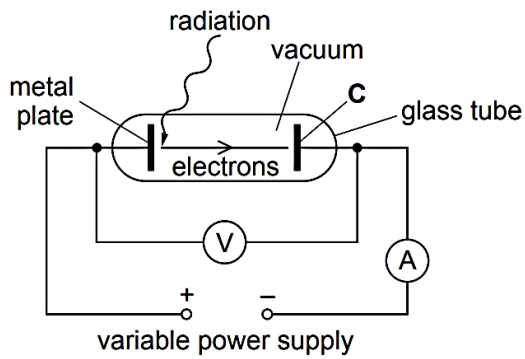

Fig. 6.1

The metal plate and the electrode **C** are both in a vacuum. The electrode **C** is connected to the negative terminal of the variable power supply. Fig. 6.2 shows the variation of current I in the circuit as the potential difference V between the metal plate and **C** is increased from 0 V to 3.0 V.

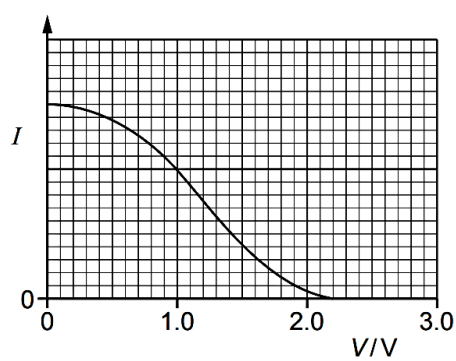

Fig. 6.2

(i) Explain why the current decreases as V increases.

.....

.....

.....

..... [2]

(ii) Using Fig 6.2, determine the maximum kinetic energy of the emitted electrons. Explain your working.

.....

.....

.....

..... [2]