For Examiner's Use

**6** **(a)** The resistivity of copper is $1.7 \times 10^{-8}$ Ω m. Show that the resistance of a copper wire of length 1.5 m and cross-sectional area of $3.2 \times 10^{-9}$ m$^2$ is about 8.0 Ω.

[1]

**(b)** The copper wire in **(a)** is used to connect a circuit as shown in Fig. 6.1. Cell A has an e.m.f of 12.0 V and internal resistance 1.0 Ω. A 2.0 Ω resistance is used and connected in series with cell A.

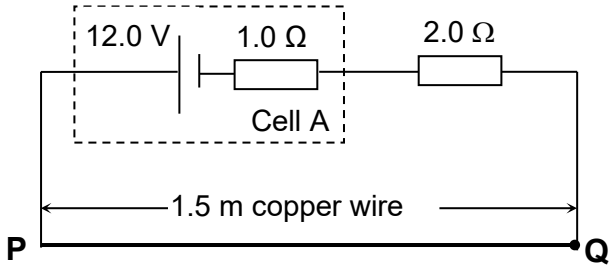


**Fig. 6.1**

Determine the drift velocity of the electrons flowing in the copper if the number of electrons per unit volume is $8.5 \times 10^{28}$ m$^{-3}$.

drift velocity = ..... m s$^{-1}$ [2]

**(c)** Cell B, a galvanometer and resistor of 4.0 Ω is now placed in parallel together with the circuit and is shown in Fig. 6.2.

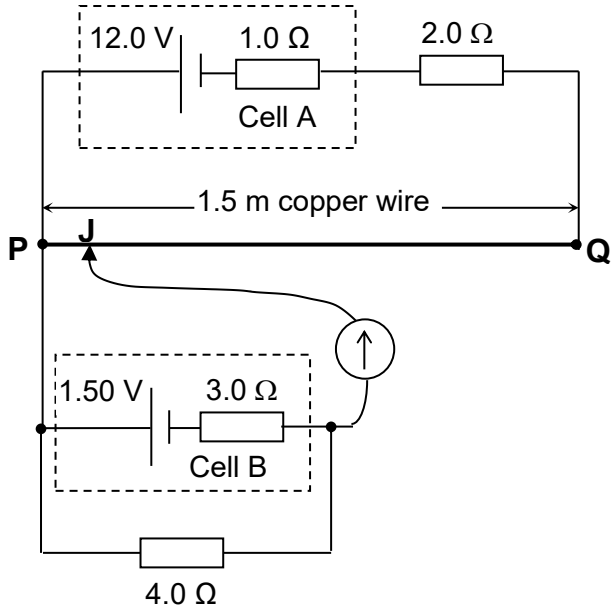


**Fig. 6.2**

For Examiner's Use

**(i)** Show that the potential difference across the copper wire is 8.7 V.

[1]

**(ii)** Calculate the balance length PJ, in which the galvanometer will show zero reading.

PJ = ……. m [3]

**(iii)** The balance point is found to be too near P resulting in high fractional error in the determination of balance length.

Suggest and explain how the circuit can be modified, without changing Cell B, to improve the accuracy.

……

……

……

…… [2]

**(d)** PJ is now increased.

Indicate the direction in Fig. 6.2 how the current will flow, if any, through the galvanometer. [1]