Answer **one** question in this section in the spaces provided.

8 **(a)** Define the *tesla*.

.....

.....

.....

..... [2]

(b) Fig. 8.1 shows an arrangement used to accelerate an initially stationary alpha particle and make it travel in a uniform magnetic field.

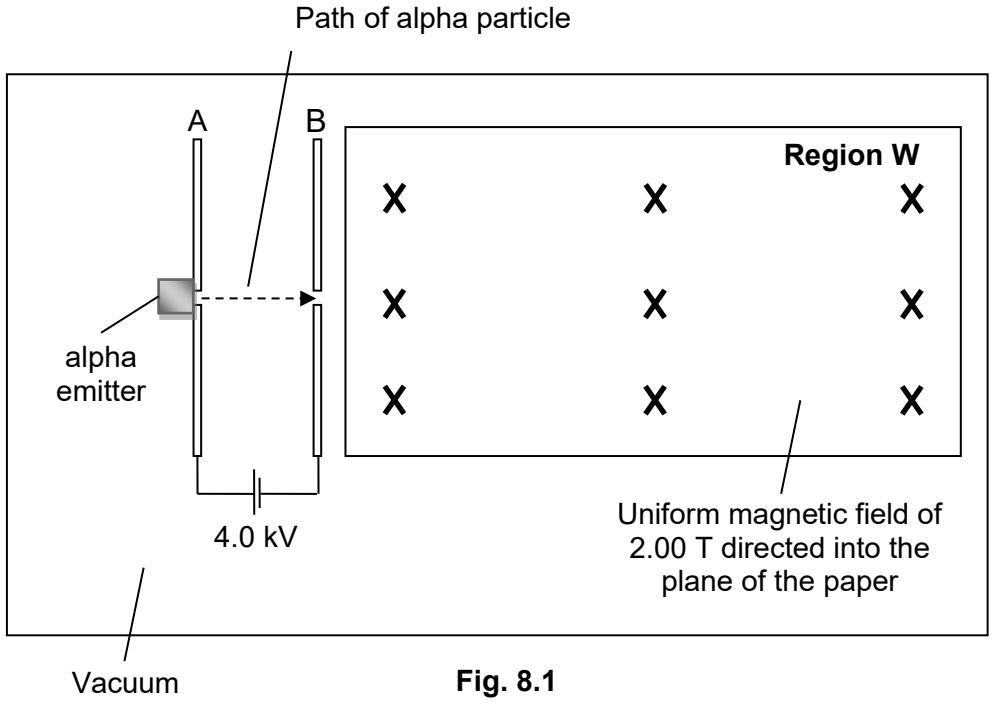

Fig. 8.1

(i) On Fig. 8.1, draw a possible trajectory of the alpha particle in the uniform magnetic field.

..... [1]

(ii) Explain whether the force experienced by the alpha particle due to the magnetic field changes its kinetic energy.

.....

.....

.....

.....

.....

..... [3]

For Examiner's Use

(iii) Show that the alpha particle will attain a speed of 6.21×10^5 m s^{-1} when it reaches the slit opening of plate B.

[1]

(iv) Determine the electric field that needs to be applied in **Region W** for the alpha particle to pass through the uniform magnetic field undeflected.

magnitude = …….. V m^{-1} [2]

direction = …….. [1]

(c) Suppose that the arrangement in Fig. 8.1 is now modified so that the alpha particle enters the uniform magnetic field at an angle of 30° to the horizontal as shown in Fig. 8.2 below.

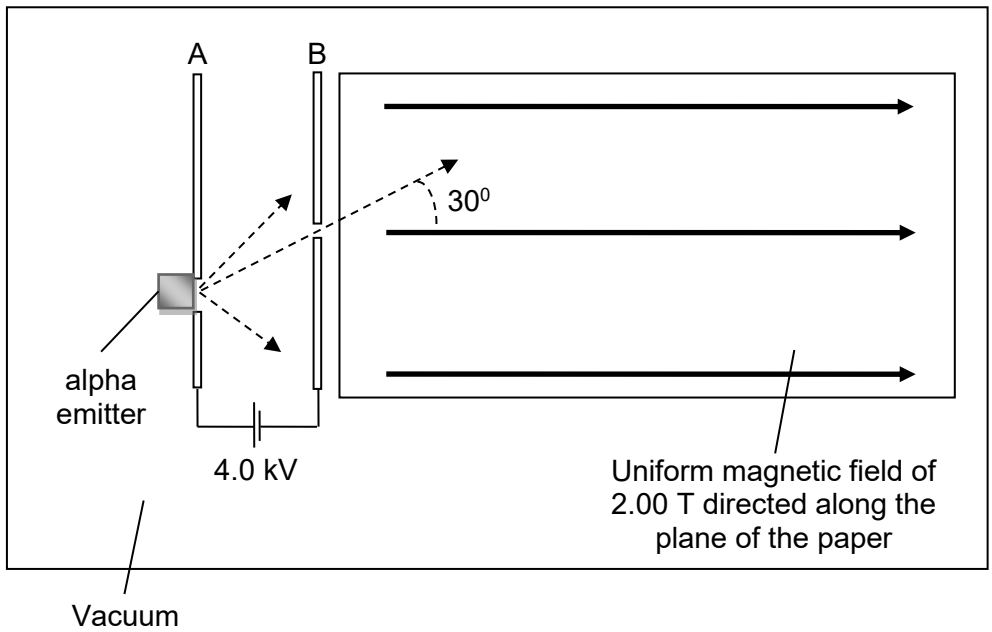

Fig 8.2

For Examiner's Use

The path of the alpha particle can be described as a helix as shown in Fig. 8.3.

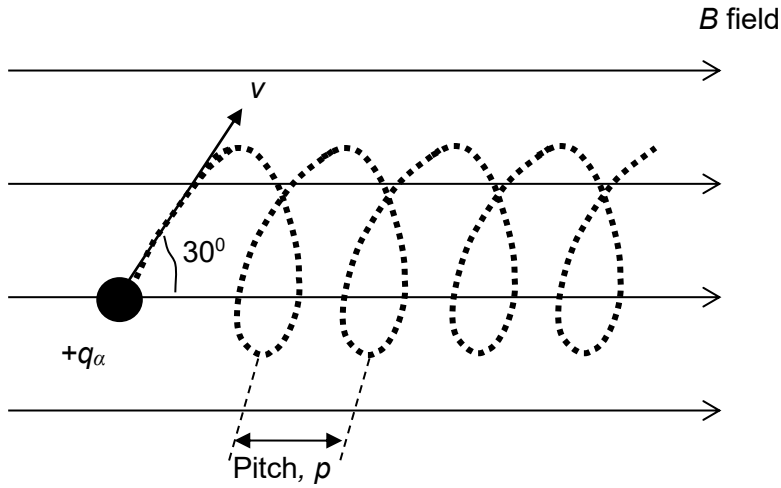

Fig. 8.3 (not to scale)

(i) Calculate the radius r of the helical path.

radius = …… m [2]

(ii) Show that the period, T of the helical path can be expressed as:

$$T = \frac{2\pi m_\alpha}{q_\alpha B}$$

where m_α and q_α is the mass and charge of the alpha particle respectively.

[1]

For Examiner's Use

(iii) Calculate the pitch, p

pitch = ... m [3]

(iv) Describe and explain how the helical path will change if a positron, ${}^{0}_{+1}e^{+}$ (i.e. a particle with the mass of an electron and charge $+1.6 \times 10^{-19}$ C) with the same initial velocity was to be used in the experiment instead. You may quote relevant equations to substantiate your answer.

.....

.....

.....

..... [4]