4. The needle of a sewing machine is made to oscillate vertically through a total distance of 22 mm, as shown in Fig. 4.

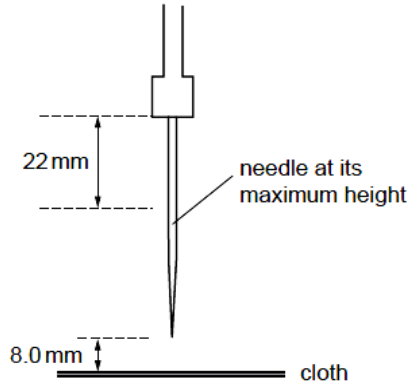

Fig. 4

The oscillations of the needle are simple harmonic with a frequency of 4.5 Hz. The cloth that is being sewn is positioned 8.0 mm below the point of the needle when the needle is at its maximum height.

(a) Explain what is meant by *simple harmonic motion*.

.....

.....

..... [2]

(b) Determine the values of the

(i) amplitude of oscillation,

amplitude = ... mm [1]

(ii) angular frequency,

angular frequency = ... rad s^{-1} [1]

(iii) maximum acceleration,

acceleration = ... $m\ s^{-2}$ [1]

(iv) displacement of the needle from its equilibrium position as it just passes downwards through the cloth (taking upward direction as positive),

displacement = ... mm [1]

(v) speed of the needle as it just passes downwards through the cloth.

speed = ... $m\ s^{-1}$ [2]