4 Fig. 4.1 shows how the resistance of a light-dependent resistor (LDR) varies with the intensity of the light incident on it.

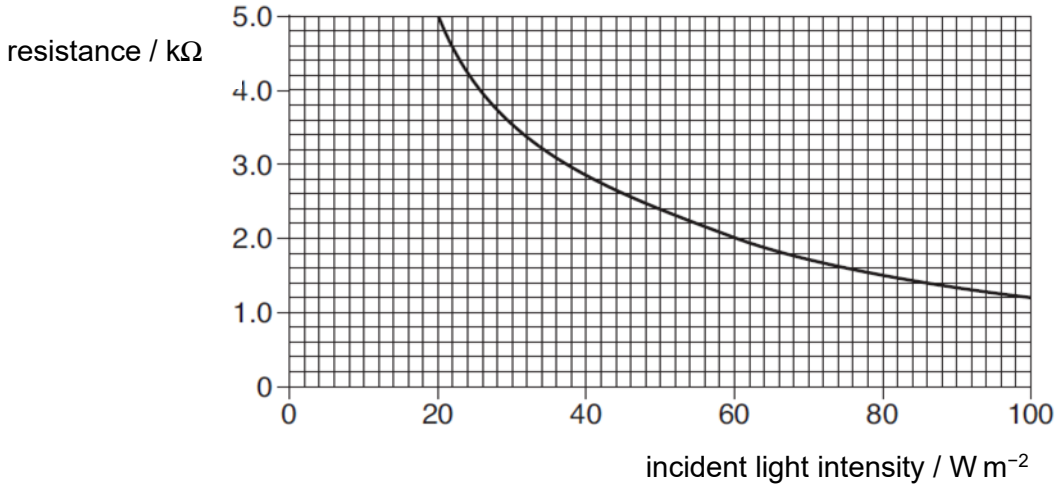

Fig. 4.1

Fig. 4.2 shows a light-sensing potential divider circuit used in a lamp where the potential difference across the LDR can be used to control the brightness of the lamp in a room.

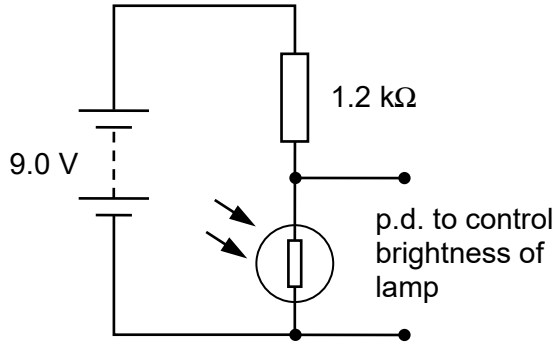

Fig. 4.2

The battery has an e.m.f. of 9.0 V and negligible internal resistance. A fixed resistor of 1.2 kΩ and the LDR is connected in series with the battery. When the room is in a low-light condition, the potential difference across the LDR reaches 7.0 V.

(a) State and explain *quantitatively*, if the resistance of the LDR is inversely proportional to the intensity of the light incident on it.

.....

.....

..... [1]

(b) Calculate the resistance R of the LDR.

R = …….. kΩ [3]

(c) Use Fig. 4.1 to determine the intensity of light incident on the LDR.

light intensity = ... W m^{-2} [1]

(d) Fig. 4.3 shows a close-up of the LDR device used in the circuit in Fig. 4.2. The LDR consists of a uniform strip of semiconductor whose resistance is dependent on the intensity of the light incident on it. The cross-sectional area of the strip is 0.50 mm^2.

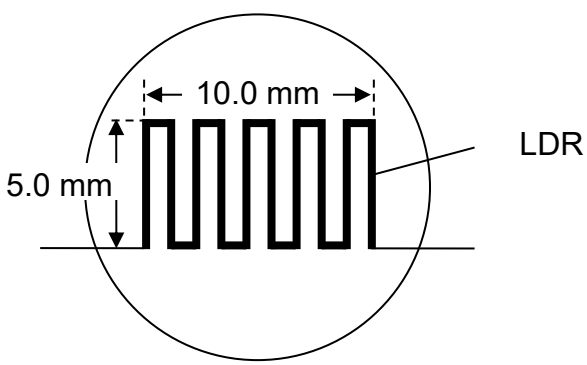

Fig. 4.3

Use your answer in **(b)** to estimate the resistivity of the LDR.

resistivity = ... Ω m [2]